DEUTSCHE NORM

August 2010

DIN EN ISO 10407-2

DIN

ICS 75.180.10

Ersatz für
DIN EN ISO 10407-2:2009-04

Erdöl- und Erdgasindustrie – Ausrüstung für das Rotarybohren – Teil 2: Inspektion und Klassifizierung von Bohrstrang-Komponenten (ISO 10407-2:2008 + Cor. 1:2009); Englische Fassung EN ISO 10407-2:2008 + AC:2009, nur auf CD-ROM

Petroleum and natural gas industries –
Rotary drilling equipment –
Part 2: Inspection and classification of used drill stem elements
(ISO 10407-2:2008 + Cor. 1:2009);
English version EN ISO 10407-2:2008 + AC:2009, only on CD-ROM

Industries du pétrole et du gaz naturel –
Équipement de forage rotatif –
Partie 2: Contrôle et classification des éléments de garnitures de forage usagés
(ISO 10407-2:2008 + Cor. 1:2009);
Version anglaise EN ISO 10407-2:2008 + AC:2009, seulement en CD-ROM

Gesamtumfang 224 Seiten

Normenausschuss Erdöl- und Erdgasgewinnung (NÖG) im DIN

AVA Documents
Document Sharing Hub

Full document details: DIN EN ISO 10407-2:2010-08

Nationales Vorwort

Dieses Dokument (EN ISO 10107-2:2008 + AC:2009) wurde vom ISO/TC 67 „Materials, equipment and offshore structures for petroleum, petrochemical and natural gas industries“, Subkomitee SC 4 „Drilling and production equipment“ in Zusammenarbeit mit dem Technischen Komitee CEN/TC 12 „Materialien, Ausrüstungen und Offshore-Bauwerke für die Erdöl-, petrochemische und Erdgasindustrie“ (Sekretariat AFNOR, Frankreich) erarbeitet.

Für Deutschland hat hieran der Arbeitsausschuss NA 109-00-01-04 AK „Bohr- und Fördereinrichtungen — Spiegelausschuss zu ISO/TC 67/SC 4“ im Normenausschuss Erdöl- und Erdgasgewinnung (NÖG) des DIN Deutsches Institut für Normung e. V. mitgearbeitet.

Diese Europäische Norm enthält unter Berücksichtigung des DIN-Präsidialbeschlusses 1/2004 nur die englische Originalfassung der ISO Norm.

Diese Norm enthält neben den gesetzlichen Einheiten auch die Einheiten „°F“, „ft“, „gal (gallon)“, „in (inch)“, „lb“, „psi“ und „r/min“, die im Deutschen Normenwerk nicht zugelassen sind. Es wird ausdrücklich darauf hingewiesen, dass die Anwendung dieser Einheiten im nationalen amtlichen und geschäftlichen Verkehr aufgrund des Gesetzes über Einheiten im Messwesen nicht zulässig ist.

Umrechnung:

Nicht-SI-Einheit	**SI-Einheit**	**Umrechnung**	
°F	°C	°C	= (5/9) (°F-32)
ft	m	1 ft	= 0,3048 m
gal (gallon)	l	1 gal	= 3,785 l
in (inch)	mm	1 in	= 25,4 mm
lb (pound)	kg	1 lb	= 0,453 592 37 kg
psi (psig)	kPa	1 psi	= 6,894 757 kPa
r/min	min^{-1}	1 r/min	= 1 min^{-1}

Für die in diesem Dokument zitierten Internationalen Normen wird im Folgenden auf die entsprechenden Deutschen Normen hingewiesen:

ISO 10424-1 siehe DIN EN ISO 10424-1
ISO 11961 siehe DIN EN ISO 11961

Änderungen

Gegenüber DIN EN ISO 10407-2:2009-04 wurden folgende Korrekturen vorgenommen:

a) die Europäische Berichtigung EN ISO 10407-2:2008/AC:2009 wurde eingearbeitet;

b) Änderung der Zahlenwerte in Spalte 3, 4 und 5 der Tabelle D.10 „Dimensional limits on used bottom-hole-assembly connections with stress-relief features“.

Frühere Ausgaben

DIN EN ISO 10407-2: 2009-04

Documents
Document Sharing Hub

Full document details: DIN EN ISO 10407-2:2010-08

Nationaler Anhang NA
(informativ)

Literaturhinweise

DIN EN ISO 10424-1, *Erdöl- und Erdgasindustrie — Drehende Bohrausrüstungsteile — Teil 1: Drehende Bohrgestänge-Elemente*

DIN EN ISO 11961, *Erdöl- und Erdgasindustrie — Stahl-Bohrrohre*

Documents
Document Sharing Hub

Full document details: DIN EN ISO 10407-2:2010-08

— Leerseite —

Documents
Document Sharing Hub

Full document details: DIN EN ISO 10407-2:2010-08

EUROPEAN STANDARD

NORME EUROPÉENNE

EUROPÄISCHE NORM

EN ISO 10407-2

October 2008

+AC

October 2009

ICS 75.180.10

English Version

Petroleum and natural gas industries — Rotary drilling equipment — Part 2: Inspection and classification of used drill stem elements (ISO 10407-2:2008 + Cor. 1:2009)

Industries du pétrole et du gaz naturel —
Équipement de forage rotatif —
Partie 2: Contrôle et classification des éléments de garnitures de forage usagés
(ISO 10407-2:2008 + Cor. 1:2009)

Erdöl- und Erdgasindustrie —
Ausrüstung für das Rotarybohren —
Teil 2: Inspektion und Klassifizierung von Bohrstrang-Komponenten
(ISO 10407-2:2008 + Cor. 1:2009)

This European Standard was approved by CEN on 27 September 2008.

This corrigendum becomes effective on 1 October 2009 for incorporation in the three official language versions of the EN.

CEN members are bound to comply with the CEN/CENELEC Internal Regulations which stipulate the conditions for giving this European Standard the status of a national standard without any alteration. Up-to-date lists and bibliographical references concerning such national standards may be obtained on application to the CEN Management Centre or to any CEN member.

This European Standard exists in three official versions (English, French, German). A version in any other language made by translation under the responsibility of a CEN member into its own language and notified to the CEN Management Centre has the same status as the official versions.

CEN members are the national standards bodies of Austria, Belgium, Bulgaria, Cyprus, Czech Republic, Denmark, Estonia, Finland, France, Germany, Greece, Hungary, Iceland, Ireland, Italy, Latvia, Lithuania, Luxembourg, Malta, Netherlands, Norway, Poland, Portugal, Romania, Slovakia, Slovenia, Spain, Sweden, Switzerland and United Kingdom.

EUROPEAN COMMITTEE FOR STANDARDIZATION
COMITÉ EUROPÉEN DE NORMALISATION
EUROPÄISCHES KOMITEE FÜR NORMUNG

Management Centre: Avenue Marnix 17, B- 1000 Brussels

© 2009 CEN All rights of exploitation in any form and by any means reserved worldwide for CEN national Members.

Ref. No. EN ISO 10407-2:2008 + AC:2009: E

Documents
Document Sharing Hub

Full document details: DIN EN ISO 10407-2:2010-08

Contents

Page

Foreword 5
Introduction 6
1 Scope 7
2 Normative references 7
3 Terms and definitions 7
4 Symbols and abbreviated terms 14
4.1 Symbols 14
4.2 Abbreviated terms 15
5 Conformance 16
5.1 Basis for inspection 16
5.2 Repeatability of results 17
5.3 Ordering information 17
6 Quality assurance 17
6.1 General 17
6.2 Standardization and operating procedures 17
6.3 Equipment description 18
6.4 Personnel qualification 18
6.5 Dynamic test data demonstrating the system capabilities for detecting the reference indicators 18
6.6 Reports 18
7 Qualification of inspection personnel 18
7.1 General 18
7.2 Written procedure 18
7.3 Qualification responsibility and requirements 19
7.4 Training programmes 19
7.5 Examinations 19
7.6 Experience 19
7.7 Re-qualification 19
7.8 Documentation 20
7.9 NDT personnel certification 20
8 General inspection procedures 20
8.1 General 20
8.2 Owner/operator work site requirements for quality inspection 20
8.3 Documents at job site 20
8.4 Pre-inspection procedures 21
8.5 Drill-pipe and tool-joint classification markings 21
8.6 Post-inspection procedures 22
9 General non-destructive inspection method requirements 25
9.1 General 25
9.2 Equipment 25
9.3 Illumination 26
9.4 Magnetic-particle-inspection equipment 27
9.5 Ultrasonic 29
9.6 Electromagnetic inspection units 30
10 Drill stem element inspection and classification 30
10.1 Pipe body — Full-length visual inspection 30
10.2 Drill body — Outside diameter gauging 31
10.3 Pipe body — Ultrasonic wall-thickness gauging 33
10.4 Pipe body — Full-length electromagnetic inspection (EMI) 35

Documents
Document Sharing Hub
Full document details: DIN EN ISO 10407-2:2010-08

Page

10.5 Pipe body — Full-length ultrasonic transverse and wall thickness ... 37
10.6 Pipe body — Full-length ultrasonic transverse, wall thickness and longitudinal inspection ... 40
10.7 Drill-pipe body — External magnetic-particle inspection of the critical area ... 43
10.8 Drill-pipe body — Bi-directional external magnetic-particle inspection of the critical area ... 46
10.9 Pipe body — Full-length wall-loss inspection ... 49
10.10 Pipe body — Ultrasonic inspection of the critical area ... 51
10.11 Pipe body — Calculation of cross-sectional area ... 55
10.12 Pipe body — Document review (traceability) ... 56
10.13 Pipe body — Evaluation and classification ... 56
10.14 Tool joints ... 61
10.15 Tool joints — Check for box swell and pin stretch ... 66
10.16 Repair of rejected tool joints ... 67
10.17 Tool joints — Check tool-joint pin and box outside diameter and eccentric wear ... 67
10.18 Tool joints — Measure tool-joint pin and box outside diameter and check for eccentric wear ... 69
10.19 Tool joints — Check tool-joint pin and box tong space ... 70
10.20 Tool joints — Measure tool-joint pin and box tong space ... 71
10.21 Tool joint — Magnetic-particle inspection of the pin threads ... 72
10.22 Tool joint — Magnetic-particle inspection of box threads ... 74
10.23 Tool joints — Measure tool-joint pin inside diameter ... 76
10.24 Magnetic-particle inspection of the connection OD for heat-check cracking ... 77
10.25 Bi-directional wet magnetic-particle inspection of the connection OD for heat-check cracking ... 78
10.26 Tool joints — Measure the tool-joint counterbore depth, pin-base length and seal width ... 82
10.27 BHA connection — Visual inspection of bevels, seals, threads and stress-relief features ... 83
10.28 BHA — Measure box outside diameter, pin inside diameter, counterbore diameter and benchmark location if a benchmark is present ... 86
10.29 BHA — Check bevel diameter ... 88
10.30 BHA — Measure bevel diameter ... 89
10.31 BHA — Magnetic-particle inspection of the pin and box threads ... 89
10.32 BHA connection — Liquid-penetrant inspection of the pin and box threads ... 92
10.33 BHA — Dimensional measurement of stress-relief features ... 93
10.34 Length measurements of the counterbore, pin and pin neck ... 96
10.35 Drill collar — Visual full-length OD and ID, markings, fish-neck length and tong space ... 97
10.36 Drill-collar elevator groove and slip-recess magnetic-particle inspection ... 98
10.37 Drill-collar elevator-groove and slip-recess measurement ... 100
10.38 Subs (full-length visual OD and ID), fish-neck length, section-change radius and markings ... 102
10.39 Float-bore recess measurements ... 103
10.40 Magnetic-particle inspection of subs — Full-length, internal and external ... 105
10.41 HWDP — Visual full-length OD and ID, markings and tong space ... 107
10.42 Visual inspection and wear pattern report for kelly ... 108
10.43 Magnetic-particle evaluation of critical areas on kellys ... 110
10.44 Magnetic-particle evaluation, full length, of the drive section on kellys ... 110
10.45 Stabilizer (full-length visual OD and ID), fish-neck length, blade condition, ring gauge and markings ... 110
10.46 Magnetic-particle inspection of the base of stabilizer blades for cracking ... 112
10.47 Function test ... 114
10.48 Bi-directional, wet magnetic-particle inspection of the base of stabilizer blade for cracking ... 115
10.49 Visual inspection of jars (drilling and fishing), accelerators and shock subs ... 118
10.50 Maintenance review ... 119
10.51 Dimensional measurement of wear areas as specified by OEM requirements ... 119
10.52 Original equipment manufacturer designated testing for used equipment ... 120
10.53 MWD/LWD — Visual, full-length OD and ID, and markings, including visual inspection of hard-banding and coatings ... 120
10.54 Motors and turbines — Visual, full-length OD and ID and markings, including visual inspection of hard-banding and coatings ... 122

AVA Documents
Document Sharing Hub

Full document details: DIN EN ISO 10407-2:2010-08

Page

10.55 Reamers, scrapers, and hole openers — Visual, full-length OD and ID and markings, including visual inspection of hard-banding and coatings 123
10.56 Rotary steerable — Visual, full-length OD and ID and markings, including visual inspection of hard-banding 124
10.57 Full-length drift 125
10.58 Proprietary equipment inspection 126
10.59 Hard-banding inspection 127
10.60 Transverse magnetic-particle inspection of tool-joint OD and ID under the pin threads 131
10.61 Drill-pipe body — Internal magnetic-particle inspection of the critical area 132
10.62 Drill-pipe body — Bi-directional, internal magnetic-particle inspection of the critical area 134
10.63 API external upset-thread connection inspection 136

Annex A (normative) **Original equipment manufacturer (OEM) requirements** 138

Annex B (normative) **Required and additional inspections by product and class of service** 140

Annex C (normative) **SI units** 151

Annex D (informative) **USC units** 180

Annex E (informative) **Inspection-level guidelines** 209

Annex F (informative) **Proprietary drill stem connection inspection** 213

Annex G (informative) **Used work-string tubing proprietary-connection thread inspection** 218

Bibliography 220

Documents
Document Sharing Hub

Full document details: DIN EN ISO 10407-2:2010-08

Foreword

This document (EN ISO 10407-2:2008) has been prepared by Technical Committee ISO/TC 67 „Materials, equipment and offshore structures for petroleum and natural gas industries“ in collaboration with Technical Committee CEN/TC 12 „Materials, equipment and offshore structures for petroleum, petrochemical and natural gas industries” the secretariat of which is held by AFNOR.

This European Standard shall be given the status of a national standard, either by publication of an identical text or by endorsement, at the latest by April 2009, and conflicting national standards shall be withdrawn at the latest by April 2009.

Attention is drawn to the possibility that some of the elements of this document may be the subject of patent rights. CEN [and/or CENELEC] shall not be held responsible for identifying any or all such patent rights.

According to the CEN/CENELEC Internal Regulations, the national standards organizations of the following countries are bound to implement this European Standard: Austria, Belgium, Bulgaria, Cyprus, Czech Republic, Denmark, Estonia, Finland, France, Germany, Greece, Hungary, Iceland, Ireland, Italy, Latvia, Lithuania, Luxembourg, Malta, Netherlands, Norway, Poland, Portugal, Romania, Slovakia, Slovenia, Spain, Sweden, Switzerland and the United Kingdom.

Endorsement notice

The text of ISO 10407-2:2008 has been approved by CEN as a EN ISO 10407-2:2008 without any modification.

The text of ISO 10407-2:2008/Cor 1:2009 has been approved by CEN as a EN ISO 10407-2:2008/AC:2009 without any modification.

Documents
Document Sharing Hub
Full document details: DIN EN ISO 10407-2:2010-08

Introduction

Users of this International Standard should be aware that further or differing requirements can be needed for individual applications. This International Standard is not intended to inhibit a vendor from offering, or the purchaser from accepting, alternative equipment or engineering solutions for the individual application. This can be particularly applicable where there is innovative or developing technology. Where an alternative is offered, the vendor should identify any variations from this International Standard and provide details.

This International Standard shall become effective on the date printed on the cover but may be used voluntarily from the date of distribution.

This International Standard includes provisions of various natures. These are identified by the use of certain verbal forms:

— SHALL is used to indicate that a provision is MANDATORY;

— SHOULD is used to indicate that a provision is not mandatory, but RECOMMENDED as good practice;

— MAY is used to indicate that a provision is OPTIONAL;

— CAN is used to indicate a POSSIBILITY.

Documents
Document Sharing Hub
Full document details: DIN EN ISO 10407-2:2010-08

1 Scope

This part of ISO 10407 specifies the required inspection for each level of inspection (Tables B.1 through B.15) and procedures for the inspection and testing of used drill stem elements. For the purpose of this part of ISO 10407, drill stem elements include drill pipe body, tool joints, rotary-shouldered connections, drill collar, HWDP and the ends of drill stem elements that make up with them. This part of ISO 10407 has been prepared to address the practices and technology commonly used in inspection.

The practices established within this part of ISO 10407 are intended as inspection and/or testing guidance and are not intended to be interpreted to prohibit the agency or owner from using personal judgement, supplementing the inspection with other techniques, extending existing techniques or re-inspecting certain lengths.

This part of ISO 10407 specifies the qualification of inspection personnel, a description of inspection methods and apparatus calibration and standardization procedures for various inspection methods. The evaluation of imperfections and the marking of inspected drill stem elements is included.

This part of ISO 10407 provides the original equipment manufacturers' requirements regarding the minimum information needed for the inspection of their specialized tools in Annex A.

2 Normative references

The following referenced documents are indispensable for the application of this document. For dated references, only the edition cited applies. For undated references, the latest edition of the referenced document (including any amendments) applies.

ISO 10424-1, *Petroleum and natural gas industries — Rotary drilling equipment — Part 1: Rotary drill stem elements*

ISO 11961[1)], *Petroleum and natural gas industries — Steel drill pipe*

API RP 7A1, *Testing of Thread Compound for Rotary Shouldered Connections*

3 Terms and definitions

For the purposes of this document, the following terms and definitions apply.

3.1
agency
entity contracted to inspect used drill stem elements using the methods and criteria specified

3.2
A-scan
ultrasonic instrument display where distance is represented on the horizontal axis and signal strength on the vertical axis

3.3
bending-strength ratio
BSR
ratio of the section modulus of the box thread at its last engaged thread to the pin thread at its last engaged thread

---

1) To be published. (Revision of ISO 11961:1996, *Petroleum and natural gas industries — Steel pipes for use as drill pipe — Specification*)

Documents
Document Sharing Hub
Full document details: DIN EN ISO 10407-2:2010-08

3.4
bevel diameter
outer diameter of the contact face of the rotary shouldered connection

3.5
bit sub
sub, usually with two box connections, that is used to connect the bit to the drill stem

3.6
bottleneck sub
sub with two distinct outside diameters

3.7
box end
end of pipe with internal threads

3.8
box thread
internal (female) threads of a rotary shouldered connection

3.9
class 2
second in the hierarchy of used drill pipe service classifications for used drill pipe that does not meet premium class requirements

3.10
class 3
third in the hierarchy of used drill pipe service classifications for used drill pipe that does not meet class 2 requirements

3.11
calibration
adjustment of instruments to a known basic reference often traceable to the national standards body

NOTE Calibration typically is documented in a log book and by a tag applied to the instrument.

3.12
check
go/no-go determination that dimension is within tolerances

3.13
corrosion
alteration and degradation of material by its environment

3.14
critical area
area from the base of the tapered shoulder of the tool joint to a plane located 660 mm (26.0 in) away, or the end of the slip marks, whichever distance is greater

See Figure 4.

NOTE When applied to the work-string tubing area, it is from the end of the pipe to a plane located 508 mm (20 in) away, or the end of the slip marks, whichever distance is greater.

3.15
cut
incision without removal of metal caused by a sharp object

Documents
Document Sharing Hub
Full document details: DIN EN ISO 10407-2:2010-08

3.16
dent
local change in surface contour caused by mechanical impact, but not accompanied by loss of metal

3.17
drift
cylindrical gauge used to check the minimum inside diameter

3.18
drill collar
thick-walled pipe or tube designed to provide stiffness and concentration of mass at or near the bit

3.19
drill pipe
drill pipe body with weld-on tool joints

See Figure 1.

3.20
drill-pipe body
seamless steel pipe with upset ends

See Figure 1.

3.21
drill stem
all members between the swivel or top drive and the bit; includes drill string

3.22
drill string
several sections or joints of drill pipe with the tool joints that are joined together

3.23
failure
improper performance of a device or equipment that prevents completion of its design function

3.24
fatigue
process of progressive localized permanent structural change occurring in a material subjected to conditions that produce fluctuating stresses and strains at some point or points and that can culminate in cracks or complete fracture after a sufficient number of fluctuations

3.25
fatigue failure
failure that originates as a result of repeated or fluctuating stresses having maximum values less than the tensile strength of the material

3.26
fatigue crack
crack resulting from fatigue

3.27
filtered FWAC
full-wave current rectified by passing it through a capacitor or other electrical device to remove the fluctuations associated with alternating current

3.28
fish neck
region with a reduced diameter at or near the upper end of a drill string member which fishing tools can grab

Documents
Document Sharing Hub

Full document details: DIN EN ISO 10407-2:2010-08

3.29
full-depth thread
thread for which the thread root lies on the minor cone of an external thread or lies on the major cone of an internal thread

3.30
gall
surface damage on threads and seals caused by localized friction

3.31
gouge
elongated grooves or cavities caused by mechanical removal of metal

3.32
grind, noun
area where metal was removed with an abrasive wheel in the process of evaluation or repair on an imperfection

3.33
hard-banding
hard-facing
sacrificial or wear-resistant material applied to component's surface to prevent wear of the component

3.34
heat checking
formation of surface cracks formed by the rapid heating and cooling of the component

3.35
heavy-weight drill pipe
HWDP
pipe with thick wall used in the transition zone to minimize fatigue and as bit weight in directional wells

3.36
inspection
process of measuring, examining, testing, gauging or otherwise comparing the product with the applicable requirements

3.37
jar
mechanical or hydraulic device used in the drill stem to deliver an impact load to another component of the drill stem, especially when that component is stuck

3.38
kelly
square- or hexagonal-shaped steel pipe connecting the swivel to the drill pipe

NOTE The kelly moves through the rotary table and transmits torque to the drill stem.

3.39
label
dimensionless designation for the pipe body size, pipe body mass per unit length or the size and style of a rotary shouldered connection

3.40
last engaged thread
last thread on the pin engaged with the box or the box engaged with the pin

See Figure 2.

Documents
Document Sharing Hub
Full document details: DIN EN ISO 10407-2:2010-08

3.41
lead
distance parallel to the thread axis from a point on a thread turn and the nearest corresponding point on the next turn, i.e. the axial displacement of a point following the helix one turn around the thread axis

3.42
lower kelly valve
kelly cock
essentially full-opening valve installed immediately below the kelly, with outside diameter equal to the tool joint outside diameter

NOTE The valve can be closed to remove the kelly under pressure and can be stripped in the hole for snubbing operations.

3.43
make-up shoulder
sealing shoulder on a rotary shouldered connection

3.44
measure
determining of dimensional value and recording of it on a worksheet

3.45
mill slot
flat machined area on the outside diameter of a tool joint where grade, weight code and optional serial number information is stamped

3.46
owner
company or person who specifies the type of inspection or testing to be conducted and who has the authority to order it performed

3.47
pi tape
flexible steel tape that, when wrapped around the circumference of a cylinder, indicates the average outside diameter

3.48
pin base
non-threaded area at the large end of the pin connection adjacent to the shoulder

3.49
pin end
end of the pipe with external threads

3.50
pipe body
seamless steel pipe excluding upset and upset-affected areas

See Figure 1.

3.51
pit
depression resulting from corrosion or removal of foreign material rolled into the surface during manufacture

3.52
pitch
axial distance between successive threads

NOTE In a single start thread, pitch is equivalent to lead.

Documents
Document Sharing Hub

Full document details: DIN EN ISO 10407-2:2010-08

3.53
premium class
highest in the hierarchy of used drill pipe service classifications, better than class 2 and class 3

3.54
quality programme
established documented system for ensuring quality

3.55
rotary shouldered connection
connection used on drill stem elements that have coarse, tapered threads and sealing shoulders

3.56
seamless pipe
wrought steel tubular product made without a weld seam

3.57
slip area
that part of the pipe body where there is visible evidence of the trip slips having been repeatedly set numerous times in the same area

See Figure 4.

NOTE At the upper end, it is typically located approximately 560 mm (22 in) from the box-tool joint elevator shoulder, and extends from that point approximately 660 mm (26 in) toward the pin end. It can be located elsewhere depending on rig design and positioning of handling equipment. It does not include occasional setting of slips in other areas as a result of fishing operations, drill stem tests and similar applications.

3.58
stabilizer
member of the drill stem assembly used to centralize or control the direction of the bottom-hole assembly

3.59
straight sub
sub with no outside diameter change

3.60
standardization
adjustment of instruments prior to use to an arbitrary reference value

3.61
sub
short, threaded piece of pipe used to connect parts for the drilling assembly for various reasons, such as crossing over to a different connection, or to save wear and tear on more expensive elements

3.62
thread form
thread profile in an axial plane for a length of one pitch

3.63
tolerance
amount of variation permitted

3.64
upper kelly cock
valve immediately above the kelly that can be closed to confine pressure inside the drill stem

Documents
Document Sharing Hub
Full document details: DIN EN ISO 10407-2:2010-08

3.65
upset
forged end of a drill pipe tube used to increase wall thickness

3.66
user
company or person who employs the equipment

3.67
weight code
unique numerical code for each outside diameter of drill pipe, normally stamped on the pin base and in the mill slot, which provides wall thickness and pipe body mass per unit length information

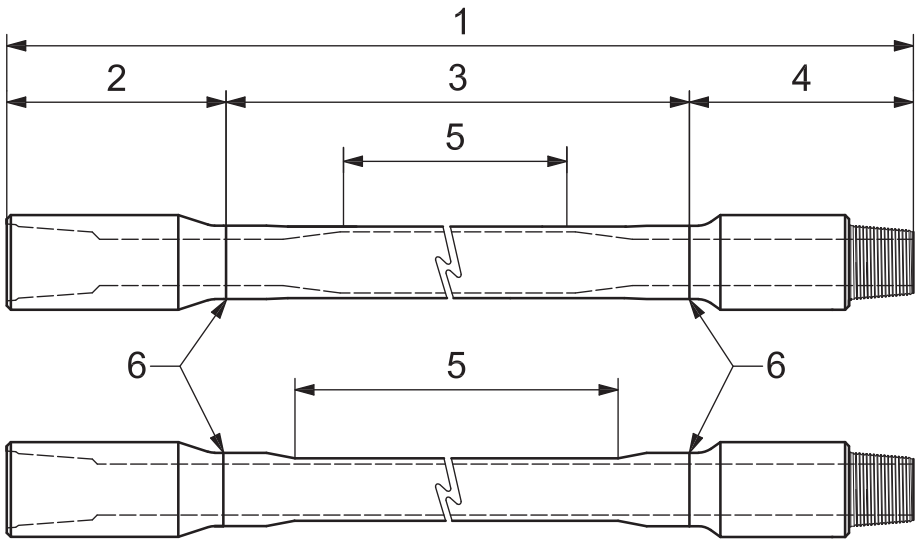

Key

1	drill pipe	4	tool joint pin
2	tool joint box	5	pipe body
3	drill pipe body	6	weld

Figure 1 — Drill-pipe nomenclature

Documents
Document Sharing Hub
Full document details: DIN EN ISO 10407-2:2010-08

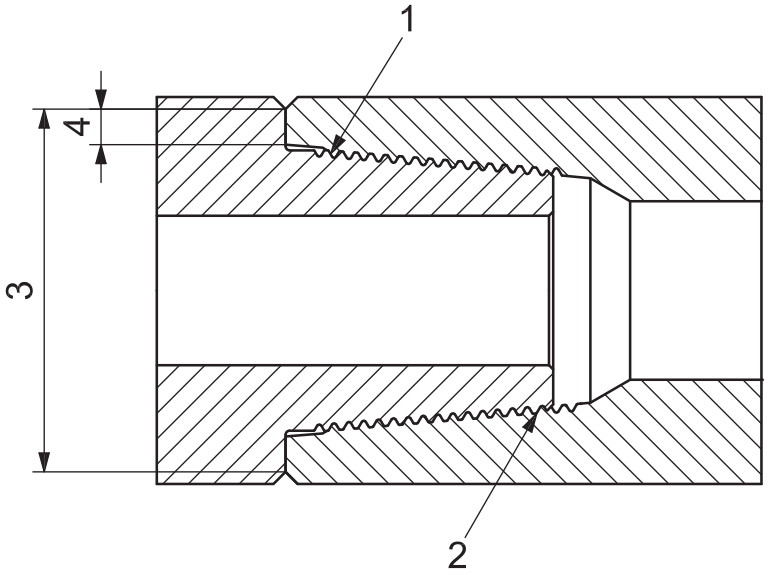

Key

1 last engaged thread – pin
2 last engaged thread – box
3 bevel diameter, D_F
4 seal

Figure 2 — Last engaged threads

4 Symbols and abbreviated terms

4.1 Symbols

A_{CS} cross-sectional area
D outside diameter
D_{cb} diameter of counterbore
D_F bevel diameter
D_{FR} diameter of float bore recess
D_L diameter of pin base
D_{LTorq} diameter of low-torque counterbore
D_{RG} diameter of stress-relief groove
D_{tj} outside diameter of tool joint
d_{tj} inside diameter of tool joint
l_e elevator groove depth
l_s slip groove depth
L_{BC} length of box connection
L_{br} length of baffle recess
L_{BT} length from shoulder to non-pressure flank on last full-depth thread box
L_c minimum-length full-crested threads
L_{Cyl} length from last scratch to beginning of the tapered section of boreback
L_{eg} length of elevator groove
L_{fn} length of fish neck
L_{PC} length of pin thread
L_{pb} length of pin base

Documents
Document Sharing Hub
Full document details: DIN EN ISO 10407-2:2010-08

L_{qc} length of counterbore

L_R length float-bore recess

L_{RG} length of stress-relief groove

L_{sg} length of slip groove

L_{Tpr} length of tapered section of boreback

L_X length from shoulder to last thread scratch in boreback cylinder

Q_c counterbore diameter

r_{EG} elevator groove radius

r_{SG} slip groove radius

S_w shoulder width

t average wall thickness

4.2 Abbreviated terms

AC alternating current

dB decibels

BHA bottom-hole assembly

BSR bending-strength ratio

DC direct current

EBW effective beam width

EMI electromagnetic inspection

EUE external upset ends

FF full face

FLUT full-length ultrasonic transverse

FSH full screen height

FWAC full-wave rectified alternating current

HWAC half-wave alternating current

HWDP heavy-weight drill pipe

ID inside diameter

LT low torque

LWD logging while drilling

MT magnetic-particle inspection

MWD measuring while drilling

NDT non-destructive testing

NI ampere turns

OBM oil-based mud

OD outside diameter

OEM original equipment manufacturer

PD pulse density

PT liquid penetrant inspection

S/N signal-to-noise ratio

SOBM synthetic oil-based mud

Documents
Document Sharing Hub

Full document details: DIN EN ISO 10407-2:2010-08

SRG stress-relief groove

SWBM synthetic water-based mud

TJ tool joint

TPR taper

UDP used drill pipe

UT ultrasonic inspection

WBM water-based mud

µW microwatts

5 Conformance

5.1 Basis for inspection

5.1.1 General

This part of ISO 10407 contains practices for use in the inspection, evaluation and classification of used drill stem elements. Guidelines to assist the user in determining the appropriate level of inspection are provided in Annex E.

The inspections for each level of inspection are shown in Annex B; these practices can be placed in one of the following levels.

a) Inspections shown under the standard inspection that are specified as mandatory for classification constitute the minimum inspection requirements for classification of the drill stem element.

b) Inspections that are specified as mandatory for classification when moderate service inspection is specified constitute minimum inspection requirements for classification of the drill stem element according to moderate service inspection requirements.

c) Inspections that are specified as mandatory for classification when critical service inspection is specified constitute minimum inspection requirements for classification of the drill stem element according to critical service inspection requirements.

d) Inspections that are not specified as mandatory may be specified based on drilling conditions.

5.1.2 Required inspection tables in Annex B

The tables in Annex B list the required inspections for each of the above levels inspection. The following is a list of drill stem elements covered in the tables in Annex B.

— Table B.1 identifies the inspections available and specifies which inspections are required for each level of inspection for used drill pipe bodies, as well as the additional services available.

— Table B.2 identifies the inspections available and specifies which inspections are required for each level of inspection for used tool joints, as well as the additional services available.

— Table B.3 identifies the inspections available and specifies which inspections are required for each level of inspection for connections used on bottom-hole assemblies, as well as the additional services available.

— Tables B.4 through B.14 identify the inspections available and specify which inspections are required for each level of inspection for bottom-hole-assembly drill stem elements other than connection inspections, as well as the additional services available.

— Table B.15 identifies the inspections available and specifies which inspections are required for each level of inspection for used tubing work strings.

Documents
Document Sharing Hub
Full document details: DIN EN ISO 10407-2:2010-08

5.2 Repeatability of results

Non-destructive inspection and measurement processes inherently produce some variability of results.

Some of the factors attributable to this variability are as follows:

a) permissible options in the selection of practices for use in the inspection of specific attributes;

b) permissible options in the selection of reference standards;

c) variations in the mechanical and electronic designs used by each equipment manufacturer of non-destructive inspection systems;

d) lack of exact repeatability within the performance capability of a single non-destructive inspection system set-up.

5.3 Ordering information

In specifying the application of this part of ISO 10407 to an order for the inspection of used drill stem elements, the owner of the equipment should specify the following order information for each size and type of element:

a) inspection(s) being applied;

b) reference standard, if applicable;

c) acceptance criteria;

d) instructions for marking.

6 Quality assurance

6.1 General

The agency performing field inspection shall implement and maintain a quality programme. The agency’s quality-management programme shall be documented and shall include written procedures for all inspections performed, as well as all procedures, control features and documentation.

The agency's quality programme shall address calibration of equipment. The frequency, range, accuracy and procedure for calibration, control features and documentation shall be included.

The agency's quality programme shall include records that verify inspection-system capability for detecting the required reference indicators. The verification of inspection-system capability shall be addressed in accordance with 6.2 through 6.6.

6.2 Standardization and operating procedures

The standardization procedures vary with the different types of equipment. As a minimum, the written procedure should include the minimum reference indicator response and allowed limit for signal-to-noise ratio. The written operating procedures should provide the required steps, control settings and parameter limits, such as the use of special electronic circuits, use of a special detector array and range of velocities being used. Procedures shall be in place to ensure that all equipment and materials employed for testing and examination are used within the temperature and humidity limits established by the manufacturer.

Documents
Document Sharing Hub

Full document details: DIN EN ISO 10407-2:2010-08

6.3 Equipment description

The equipment used to conduct the inspection should be described in sufficient detail to demonstrate that it meets the requirements.

6.4 Personnel qualification

The agency's quality programme shall include provisions for the education, training and qualification of personnel performing inspections in accordance with this part of ISO 10407.

Documentation of qualification of inspection personnel shall meet the requirements of Clause 7.

6.5 Dynamic test data demonstrating the system capabilities for detecting the reference indicators

There are many methods of verifying system capability, such as the two described in a) and b) below.

a) Inspection-system capability can be established by using statistical techniques for assessment of inspection performance. By establishing inspection-system set-up parameters and response amplitude of the applicable reference flaws, data points are established to determine the distribution of response amplitudes. These data, then, become the basis for establishing the capability of the inspection system.

b) Inspection-system capability can also be demonstrated for each inspection order by use of a reference standard with the required reference indicators. After the system is standardized according to the written procedures, the test standard is inspected at a number of positions to establish the reliability in all quadrants.

6.6 Reports

Reports shall include all system settings, signal archival media, traceability of calibration, standardization and set-up procedures and a drawing of the test standard.

7 Qualification of inspection personnel

7.1 General

Clause 7 sets forth the minimum requirements for qualification and certification (where applicable) of personnel performing field inspection of used drill stem elements.

7.2 Written procedure

Agencies performing inspection of used drill stem elements in accordance with this part of ISO 10407 shall have a written procedure for education, training, experience and qualification of personnel.

The written procedure shall establish the following:

a) administrative duties and responsibilities for execution of the written procedure;

b) personnel qualification requirements;

c) required documentation verifying all qualifications.

Documents
Document Sharing Hub
Full document details: DIN EN ISO 10407-2:2010-08

7.3 Qualification responsibility and requirements

The qualification requirements and qualification of inspection personnel shall be the responsibility of the agency.

The requirements for each applicable qualification shall include the following as a minimum:

a) training and experience commensurate with the inspector's level of qualification;

b) written and practical examinations with acceptable grades;

c) vision examination;

d) knowledge of this part of ISO 10407 and the related sections of the applicable industry standards.

7.4 Training programmes

All qualified personnel shall have completed a documented training programme designed for that level of qualification. Training may be given by the agency or an outside agent.

The programme shall include the following:

a) principles of each applicable inspection method;

b) procedures for each applicable inspection method, including standardization and operation of inspection equipment;

c) relevant sections of the applicable industry standards.

7.5 Examinations

Examinations may be given by the agency or by an outside agent.

All inspection personnel shall have successfully completed the following examinations:

a) written examinations addressing the general and specific principles of the applicable inspection method, the inspection procedures and the applicable ISO, API, or ASTM standards;

b) hands-on or operating examination that shall include apparatus assembly, standardization, inspection techniques, operating procedures, interpretation of results for appropriate levels and related report preparation;

c) annual vision examination to verify ability, with natural or corrected vision, to read J-2 letters on a Jaeger number 2 test chart at a distance of 305 mm to 381 mm (12 in to 15 in); equivalent tests such as the ability to perceive a Titmus number 8 target, a Snellen fraction 20/25 (0,8), or vision examinations with optical apparatus administered by a qualified medical practitioner are also acceptable.

7.6 Experience

All candidates for qualification shall have the experience required by the written procedure.

7.7 Re-qualification

Re-qualification requirements shall be defined in the written procedure.

Re-qualification is required at least every five years for all personnel.

Documents
Document Sharing Hub

Full document details: DIN EN ISO 10407-2:2010-08

Re-qualification of personnel is required if an individual has not performed defined functions within the previous twelve months or if an individual changes employers.

As a minimum requirement for re-qualification, all personnel shall

a) achieve an acceptable grade on a written examination addressing the current applicable inspection procedures and the applicable industry standards, and

b) provide evidence of continuing satisfactory technical performance.

7.8 Documentation

Record retention and documentation shall be required for all qualification programmes.

The minimum requirement is the retention of the following documents:

a) records of all qualified personnel showing training-programme completion and experience;

b) examinations results, which shall be maintained by the agency and made available for review upon request;

c) records for each qualified individual, which shall be retained for a minimum of one year after the revocation date of the qualification.

All qualifications and related documents shall be approved by authorized agency personnel.

7.9 NDT personnel certification

A programme for certification of NDT personnel shall be developed by the agency. ISO 11484 may be used as a guideline.

NOTE For the purposes of this recommendation, ASNT SNT-TC-1A is equivalent to ISO 11484.

The administration of the NDT personnel-certification programme shall be the responsibility of the agency.

8 General inspection procedures

8.1 General

Clause 8 covers the general procedures applicable to all inspection methods contained in this part of ISO 10407.

8.2 Owner/operator work site requirements for quality inspection

The owner/operator shall provide a site, or deliver the items for inspection to a site, where they can be inspected on racks or tables with a height suitable for inspection. The pipe, collars and other tubular products shall be stored in a single layer with sufficient space that they can be rolled one complete revolution during the inspection process. Failure to meet these requirements does not allow inspection quality consistent with the intent of this part of ISO 10407.

Thread protectors shall be provided.

8.3 Documents at job site

Agency-controlled inspection documents related to the job and relevant reference documents shall be available at the job site. Additional documentation of inspector certifications shall be available.

Documents
Document Sharing Hub
Full document details: DIN EN ISO 10407-2:2010-08

8.4 Pre-inspection procedures

8.4.1 Equipment availability

Each inspection shall start with the correct equipment available and in good working condition.

8.4.2 Description comparison

Prior to equipment set-up, the agency shall assure that the drill stem element(s) for inspection is/are the drill stem element(s) the owner has ordered inspected by comparing the information on the job order with the drill stem element markings, i.e. labels, size, ID, weight code, grade, manufacturer, features and connection.

8.4.3 Numbering or recording

All inspection should be traceable to the specific item by uniquely numbering or recording permanent serial numbers for each length inspected. For drill pipe, this number is die-stamped on the 35° (or 18° where provided) shoulder of the pin-end tool joint.

After some period of use, many drill strings are made up of replacement or added lengths. For that reason, the serial numbering for the most recent inspection should be added to the taper shoulder along with the numbers from previous inspections. Each series of numbers shall be accompanied by a means to identify the inspection classification and which was the most recently applied (see Figure 3). This is typically done by adding punch marks to denote classification and numbers denoting the month and year in which the inspection is performed and the agency mark. Inspection punch marks and classification bands shall be added only after completion of all required inspections.

Some drill-string elements, including drill pipe, receive a permanent serial number affixed by the manufacturer or by the owner. By agreement between the owner and inspection agency, the permanent identification system (where available and legible) may be used in place of the regular serial numbering process. Also by agreement with the owner, any element found without an available or legible serial number shall be given a number.

Care should be exercised to avoid placing new serial numbers over the same area occupied by previous numbers. Serial numbers shall be applied to areas where wear and other damage to the numbers is minimized and in a low-stress section of the element.

8.4.4 Cause downgrade

The inspection of each drill-string element shall require that all procedures necessary for that category be completed before the element is given a classification. There can be instances where conditions, such as cracks, holes, or unrepairable conditions, are detected before the required procedures are completed. Termination of the inspection at the point where the rejectable condition is detected should be a matter of discussion and agreement between the element owner and the inspection agency.

8.5 Drill-pipe and tool-joint classification markings

8.5.1 Permanent mark or marks

A permanent mark or marks signifying the classification of the pipe shall be stamped as follows:

a) on the 35° or 18° sloping shoulder of the pin-end tool joint (see Figure 3);

b) in some other low-stress section of the tool joint where the marking can normally carry through operations;

Cold steel stamping should be avoided on the outer surface of the tube body.

One centre punch denotes “premium”, two denote “class 2”, three denote “class 3” and four denote scrap.

Documents
Document Sharing Hub

Full document details: DIN EN ISO 10407-2:2010-08

8.5.2 Paint band marking

Paint-band marking signifying the drill-pipe and tool-joint condition shall be applied as follows.

a) If the tool joint is in the same class or better, markings are required only on the tube.

b) If the tool joint is in a class lower than the tube tool-joint classification, markings are required in the tool joint.

c) Tool joints requiring repair to the threads and seal shall be marked according to Figure 3.

8.6 Post-inspection procedures

8.6.1 Classification

Each length of pipe, tool joint, and bottom-hole assembly component shall be classified according to the requirements in Clause 10.

8.6.2 Cleaning

Remove all magnetic particles, liquid-penetrant developer and cleaning material from the connections.

8.6.3 Count lengths

Count the lengths in each of the classification categories. Verify the totals after the initial count.

8.6.4 Thread protection

After inspection, ensure that the threads are clean and dry. Coat the threads with a rotary shoulder thread compound manufactured in accordance with API RP 7A1 or as specified by the owner/operator. Coat the full threaded area, including shoulders and thread roots, for the full thread circumference. In very cold climates, it can be necessary to warm the thread compound in order to apply it. Thread compounds shall not be thinned with solvent. Reinstall clean thread protectors if available. Tighten thread protectors wrench-tight.

CAUTION — The material safety data sheets for thread compounds should be read and observed. Store and dispose of containers and unused compound in accordance with appropriate regulations.

8.6.5 Job-site checklist

Before leaving the job site, the agency shall ensure that the following items have been accomplished.

a) Pipe racking: The agency shall ensure that each row of pipe has been properly secured and that no loose or unsecured pipe is left free to roll or fall from the racks. Pipe should not be left on the ground.

b) Debris removal: The job site shall be left neatly arranged and clean of all job-related debris.

c) Solvent disposal: Cleaning solvents used at the job site shall be disposed of properly.

DANGER — Solvents, other cleaning agents, scale and other generated waste can contain hazardous materials. When applicable, material safety data sheets should be read and the precautions observed when handling products of this type. Storage, transport, use and disposal of generated waste materials and containers should be considered. Observe appropriate regulations relative to disposal of used solvents and generated waste materials.

Documents
Document Sharing Hub
Full document details: DIN EN ISO 10407-2:2010-08

8.6.6 Inspection markings

8.6.6.1 General

In 8.6.6 the practice for the uniform inspection marking of used drill stem elements is set forth.

8.6.6.2 Authority

The classification of each inspected length shall be performed only by a qualified inspector. However, any crew member may be directed to apply the appropriate descriptions, stencils and paint bands.

8.6.6.3 Drill pipe

8.6.6.3.1 Sequence number

Each length of inspected drill pipe shall have a unique number stamped on the 35° sloping pin tool-joint shoulder. The sequence number shall be preceded by the month and year of inspection, the classification stamp and name or mark of the company doing the inspection (see Figure 3, item 3). Stamps shall be no larger than 10 mm (3/8 in). The sequence number stamp is not required if serial numbers are used for traceability, but all the other information stamps shall be applied. The classification stamp shall be applied only after all required inspections have been completed and shall reflect the lowest classification for the tube and tool joints.

8.6.6.3.2 Paint bands

8.6.6.3.2.1 Pipe body

Each length shall receive pipe-body classification paint-band markings based on the requirements of Table B.18 for used drill pipe or Table B.19 for used work-string tubing. Paint bands shall be placed approximately 0,5 m (18 in) from the 35° sloping pin shoulder. Paint bands shall be approximately 51 mm (2 in) wide.

All downgraded pipe shall have a 25 mm (1 in) band around the tube in the defective area and the defective area shall be boxed in. The colour of the band shall reflect the downgrade classification of the defect. The reason for rejection shall be written next to the band with a paint marker or other indelible marker.

8.6.6.3.2.2 Downgraded tool joints

Each tool joint that does not meet the minimum outside diameter, inside diameter or shoulder width requirements in Table C.6 (Table D.6) shall receive a paint band in the centre of the tool joint. This paint band indicates that the tool joint does not have torsional strength that is at least 80 % of the required pipe-body torsional strength.

8.6.6.3.2.3 Tool-joint condition

All damaged tool-joint connections that require shop repair shall have a 25 mm (1 in) red band painted on the outside diameter of the connection adjacent to the sealing shoulder (see Figure 3). The reason for rejection shall be written on the part next to the red paint band with a paint marker or other means durable enough to endure through repair operations. These markings shall be removed after repair.

All field-repairable connections not repaired at the time of inspection repair shall have a 25 mm (1 in) green band painted on the outside diameter of the connection adjacent to the sealing shoulder (see Figure 3). The reason for rejection shall be written on the part next to the green paint band with a permanent marker. These markings shall be removed after repair.

Documents
Document Sharing Hub

Full document details: DIN EN ISO 10407-2:2010-08

8.6.6.3.2.4 Optional paint marking

A paint marking containing additional information may be placed on the tube body adjacent to the classification band(s). Optional paint markings may be used to identify the agency, the work order number, the inspection level, any optional inspections performed and the date (month and year) of the inspection. Lettering shall be at least 25 mm (1 in) high.

Paint stencil markings for landing strings shall include the minimum remaining wall used as the basis for acceptance.

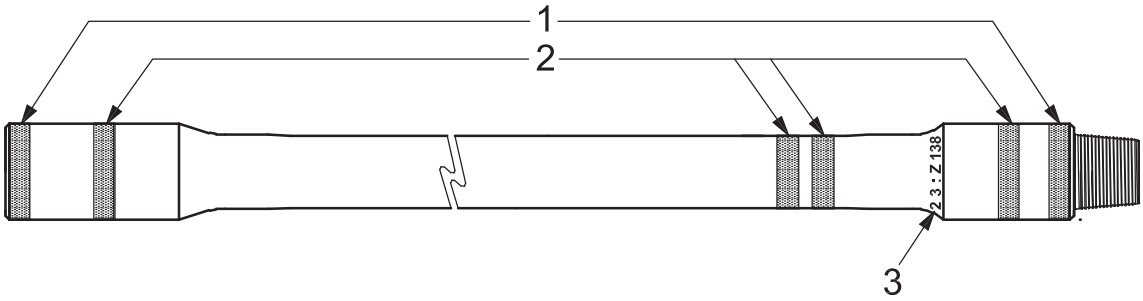

Key

1 tool-joint condition bands

2 classification paint bands for drill pipe and tool joints

3 stencil/stamp for permanent marking for classification of drill-pipe body as follows:

Tool-joint and drill-pipe classification	Number and colour of bands	Tool-joint condition	Colour of bands
Premium class	Two white	Scrap or shop repair	Red
Class 2	One yellow	Field repairable	Green
Class 3	One orange	—	—
Scrap	One red	—	—

Figure 3 — Drill-pipe and tool-joint colour code identification

8.6.6.4 Drill collars and other bottom-hole assembly drill stem elements

8.6.6.4.1 White paint markings

As near as possible to the pin shoulder, paint markings shall identify the agency, the work-order number, inspection and level, any optional inspections performed and the date (month and year) of the inspection.

8.6.6.4.2 Paint bands

8.6.6.4.2.1 BHA component body

Each acceptable BHA component shall receive a white classification paint band. Paint bands shall be placed approximately 152 mm (6 in) from the pin shoulder.

Each cracked or scrap part shall have a red paint band painted around the defective area. The reason for rejection shall be written on the part next to the red paint band with a permanent marker.

Documents
Document Sharing Hub
Full document details: DIN EN ISO 10407-2:2010-08

8.6.6.4.2.2 Connection condition

All damaged connections that require shop repair shall have a 25 mm (1 in) red band painted on the outside diameter of the connection adjacent to the sealing shoulder. The reason for rejection shall be written on the part next to the red paint band with a permanent marker. These markings shall be removed after repair.

All field-repairable connections not repaired at the time of inspection repair shall have a 25 mm (1 in) green band painted on the outside diameter of the connection adjacent to the sealing shoulder. The reason for rejection shall be written on the part next to the green paint band with a permanent marker. These markings shall be removed after repair.

8.6.7 Documentation — On-site inspection summaries

On-site inspection summaries for BHA elements shall include

— description of the part inspected,

— serial number of the part inspected,

— type of inspection performed,

— results of inspection,

— date of inspection, and

— description of all conditions causing rejection of a part.

9 General non-destructive inspection method requirements

9.1 General

Clause 9 provides descriptions of, and capability requirements for, inspection tools required for inspection of used drill pipe and bottom-hole assembly equipment.

9.2 Equipment

9.2.1 General

These requirements shall be applicable to equipment used for visual and dimensional inspection of used drill stem elements.

9.2.2 Precision callipers (micrometer, vernier or dial)

The instrument shall be calibrated in accordance with the agency's quality programme. The calibration check shall be recorded on the calliper and in a log with the date of the calibration check, the due date and the initials of the person who performed the check.

9.2.3 Non-adjustable length- and diameter-measuring devices

Length- and diameter-measuring devices consist of steel rules, steel length or diameter measuring tapes and other non-adjustable measuring devices.

Accuracy verification shall be defined in the agency's quality programme.

Documents
Document Sharing Hub
Full document details: DIN EN ISO 10407-2:2010-08

9.2.4 Depth gauges

The instrument shall be calibrated in accordance with the agency's quality programme. The calibration check shall be recorded on the calliper and in a log with the date of the calibration check, the due date and the initials of the person who performed the check.

9.3 Illumination

9.3.1 External surface illumination

9.3.1.1 Direct daylight

Direct daylight conditions do not require a check for surface illumination.

9.3.1.2 Night and enclosed-facility illumination

The diffused-light level at the surfaces being inspected shall be a minimum of 538 lx (50 ft-candles).

Illumination in enclosed, fixed-location facilities shall be in accordance with the agency's quality programme. The check shall be recorded in a log with the date, the reading and the initials of the person who performed the check. This record should be available on site.

9.3.1.3 Night illumination with portable equipment

The diffused-light level at the surfaces being inspected shall be a minimum of 538 lx (50 ft-candles).

Proper illumination shall be verified at the beginning of the job to assure that portable lighting is directed effectively at the surfaces being inspected. Illumination shall be checked during the job whenever lighting fixtures change positions or intensity relative to the surfaces being inspected.

Light meters used to verify illumination shall be calibrated in accordance with the agency's quality programme. The calibration check shall be recorded on the meter and in a log with the date of the calibration check, the due date and the initials of the person who performed the check.

9.3.2 Internal surface illumination

9.3.2.1 Mirrors for illumination

The reflecting surface shall be a non-tinted mirror that provides a non-distorted image. The reflecting surface shall be flat and clean.

9.3.2.2 Portable lights

A portable light producing an intensity greater than 1 076 lx (100 ft-candles) at the maximum inspection distance may be used for illumination of inside surfaces.

9.3.2.3 Other light sources

A light source having documented, demonstrated capability may be used for illumination of inside surfaces. The lens of the light source shall be kept clean.

9.3.2.4 Optical inspection equipment

The resolution of the borescope, video or other optical internal inspection device shall be checked at the start of a job and whenever all or part of the equipment is assembled during a job. The date on a coin [not to exceed 1,0 mm (0.040 in) in height] or, as an alternative, Jaeger J-4 letters placed within 102 mm (4.0 in) of the objective lens, shall be readable through the assembled optical inspection device.

Documents
Document Sharing Hub
Full document details: DIN EN ISO 10407-2:2010-08

9.4 Magnetic-particle-inspection equipment

9.4.1 Magnetizing current power supplies

Magnetizing current power supplies shall have an ampere meter. Ammeters (reading magnetizing current) shall be calibrated in accordance with the agency's quality programme. The calibration shall be recorded on the instrument and in a log and shall specify the date of the calibration, due date and the initials of the person performing the calibration.

9.4.2 Coils

A longitudinal magnetic field is induced by placing a coil around the product and applying a current. The number of turns of the coil shall be clearly marked on the coil.

Coils shall be checked to verify the integrity of the internal wire turns in accordance with the agency's quality programme. Typically, this is done by comparing the resistance or magnetic flux values to those initially established when the coil was new.

The verification check shall be recorded in a log with the date of the calibration check, the due date and the initials of the person who performed the check.

9.4.3 Internal conductor

A circumferential magnetic field is induced by inserting an insulated conductor inside the product, completing the circuit to the power supply and energizing the circuit with the appropriate current as given in Table C.2 (Table D.2). An audible or visible annunciator may be used in addition to the ampere meter to indicate inadequate current.

The conductor shall be insulated from the product surface to prevent electrical contact or arcing.

9.4.4 Yokes

Yokes are hand-held magnetizing devices used to detect imperfections in any orientation on the same surface to which the yoke is applied. Yokes have either fixed or articulated legs and may be energized by either alternating or direct current. For some applications, adjustable legs are preferred for inspection of curved surfaces because the legs can be adjusted to maintain contact on the inspection surface, regardless of contour.

AC-energized yokes shall be capable of lifting 4,5 kg (10.0 lbs) at the maximum pole spacing that can be used for inspection.

DC-energized yokes shall be capable of lifting 18 kg (40 lbs) at the maximum pole spacing that can be used for inspection.

Yokes normally are tested for lifting power using a steel bar or plate of the appropriate mass or a calibrated magnetic-mass lift-test bar. Frequency and procedures for the conduction lift test shall be in accordance with the agency's quality programme. The calibration check shall be recorded on the yoke and in a log with the date of the calibration check, the due date and the initials of the person who performed the check.

9.4.5 Ground-fault interrupter circuits

When using coils or yokes with active wet magnetic-particle inspection, the power circuit should include a ground-fault interrupter.

Documents
Document Sharing Hub

Full document details: DIN EN ISO 10407-2:2010-08

9.4.6 Magnetic particle field indicators

Acceptable field indicators (e.g. slotted shims, strips, pie field indicators) should be able to hold magnetic particles in a field of approximately 5 Gs. Magnetic-particle field indicators are limited to indicating the presence of an external magnetic field, that is, with the flux lines in air rather than in the material.

9.4.7 Magnetometers and gauss meters

9.4.7.1 General

Magnetometers and gauss meters are used to indicate the relative strength of the external magnetic field. Both types of instrument are limited to measuring the external magnetic fields but work well to demonstrate similar magnetic-field strength. If the magnetic field indicates the same on two pipe ends when the field strength indicator is placed at the same position on both, it can be concluded that the magnetic fields in both pipe are about the same.

9.4.7.2 Gauss meters

Gauss meters that are used to verify relative magnetic field strength shall be calibrated in accordance with the agency's quality programme. The calibration check shall be recorded on the meter and in a log with the date of the calibration check, the due date and the initials of the person who performed the check.

9.4.7.3 Magnetometers

Magnetometers shall be tested for accuracy in accordance with the agency's quality programme. The calibration check shall be recorded on the magnetometer and in a log with the date of the calibration check, the due date and the initials of the person who performed the check.

9.4.8 Magnetic particles

9.4.8.1 General

Magnetic particles are used to indicate imperfections that cause magnetic-flux leakage. Particles may be applied either dry or in suspension (wet).

9.4.8.2 Dry magnetic particles

Dry magnetic particles shall contrast with the product surface and shall not be reused. The mixture shall consist of particles of different sizes with at least 75 % mass fraction being finer than 150 µm and a minimum of 15 % mass fraction finer 45 µm. The particle mixture shall not contain contaminates such as moisture, dirt, sand, etc. As a supplementary practice, there may be a particle manufacturer's batch or lot check of particles for high permeability and low retentivity.

9.4.8.3 Wet fluorescent magnetic particles

Fluorescent magnetic particles are suspended in a solution. The solution shall be low-viscosity (5 cSt or less), non-fluorescent, with a flash point above 93 °C (200 °F) and able to wet the surface completely. Particles shall glow when exposed to ultraviolet light. Wet fluorescent particles shall be applied by low-velocity flow to prevent washing away weakly held indications. Recirculating systems, spray containers or other means shall be used to obtain proper application.

The solution shall be mixed according to the manufacturer's instructions and agitated either continuously or periodically. Concentration shall be between 0,1 % volume fraction and 0,4 % volume fraction. Settling test time is 1 h for oil-based carriers and 30 min for water-based. Settling tests shall be done in a vibration-free, non-magnetic environment. A manufacturer's lot test may be used in lieu of the settling test for particles provided in aerosol containers.

The concentration of the solution shall be checked prior to use. The concentration of the solution in recirculating systems shall be verified at least once during each shift.

Documents
Document Sharing Hub
Full document details: DIN EN ISO 10407-2:2010-08

9.4.8.4 Black magnetic particle and white background

White background coating shall be supplied by the wet black-particle manufacturer or designated as compatible with the particles by the particle manufacturer. Total coating thickness from all forms of coatings at the time of inspection shall not exceed 0,05 mm (0.002 in). Black particles are suspended in a solution. The solution shall be of low viscosity (5 cSt or less), with a flash point above 93 °C (200 °F) and able to wet the surface completely. Particles shall be applied by low-velocity flow to prevent washing away weakly held indications. Recirculating systems, spray containers or other means shall be used to obtain proper application.

9.4.8.5 Ultraviolet light

Ultraviolet light is employed to illuminate the accumulation of fluorescent-dyed magnetic particles. An appropriately filtered mercury arc lamp or other source should provide ultraviolet light. It shall be capable of providing wavelengths at or near 365 nm and a minimum intensity of 1 000 μW/cm^2 at the inspection surface under working conditions. Intensity should be measured with the ultraviolet light sensor on the inspection surface and directed toward the ultraviolet light source. The ambient visible light intensity during ultraviolet light inspection, measured at the inspection surface, shall not exceed 21,5 lx (2 ft-candles).

Meters used to verify ultraviolet or visible illumination shall be calibrated in accordance with the agency's quality programme. The calibration check shall be recorded on the meter and in a log with the date of the calibration check, the due date, and the initials of the person who performed the check.

9.5 Ultrasonic

9.5.1 Thickness gauges

9.5.1.1 Gauge linearity

The linearity of the gauge's readout shall be calibrated in accordance with the agency's quality programme. The calibration shall be recorded on the instrument and in a log and shall specify the date of the calibration, due date and the initials of the person performing the calibration.

9.5.1.2 Sensitivity check

If the ultrasonic gauge is used to evaluate the remaining wall above an internal surface imperfection, the ultrasonic-gauge-transducer combination shall be able to detect a 0,79 mm (0.031 in) flat-bottomed hole at least 9,7 mm (0.38 in) from the front surface of a parallel surface test block. The remaining wall thickness measurement accuracy shall be ± 0,25 mm (± 0.010 in). Verification of this capability may be part of the agency's periodic calibration. If this check is performed at the time of calibration, it shall be noted in the calibration records.

9.5.2 Ultrasonic flaw-detector units

Instrument controls of the flaw-detector units shall be calibrated in accordance with the agency's quality programme.

If a recorder display is used, the linearity of its scale shall also be calibrated in accordance with the agency's quality programme.

Instrument readouts for determining rotational speed and linear or inspection-mechanism speed if used to monitor coverage shall also be calibrated in accordance with the agency's quality programme.

The calibration shall be recorded on the A-scan display instrument or recorder and in a log and shall specify the date of calibration, the due date and the initials of the person performing the calibration.

Documents
Document Sharing Hub

Full document details: DIN EN ISO 10407-2:2010-08

9.6 Electromagnetic inspection units

9.6.1 Ammeters

Ammeters (reading magnetizing current) shall be calibrated in accordance with the agency's quality programme. The calibration shall be recorded on the ammeter. A log shall be maintained to record the calibration of the ammeter, coil and reference standards, and shall specify the date of the calibration, due date and the initials of the person performing the calibration.

9.6.2 Coils

Coils shall be checked to verify the integrity of the internal wire turns in accordance with the agency's quality programme. Typically, this is done by comparing resistance or magnetic flux values to those initially established when the coil was new.

The verification check shall be recorded in a log with the date of the calibration check, the due date and the initials of the person who performed the check.

9.6.3 Rotational and linear speed instruments

Instrument readouts for determining rotational speed and linear or inspection-mechanism speed if used to monitor coverage shall also be calibrated in accordance with the agency's quality programme.

9.6.4 EMI reference standards

The response of each reference indicator for reference standards with more than one reference indicator shall be similar (average indication ± 10 %) and shall be verified at the time of manufacture and at least once every 2 years thereafter.

10 Drill stem element inspection and classification

10.1 Pipe body — Full-length visual inspection

10.1.1 Description

A full-length visual inspection of the entire outside surface from upset to upset (see Figure 1, pipe body) shall be conducted to detect gouges, cuts, pits, dents, crushing, necking, string shot, grinds, bent pipe and other visually detectable imperfections. Internal surfaces shall be examined from each end to detect pits, erosion, and wireline cuts. An evaluation of the condition of the internal coating, if present, shall also be made.

10.1.2 Preparation

Areas inspected shall be clean and free from all dirt, thread dope, grease, rust, loose paint, lint and other types of foreign material that can limit and interfere with the inspection process and accuracy.

10.1.3 Equipment

A non-permanent marker, such as chalk, may be used to identify areas requiring evaluation or that can cause indications on the electromagnetic inspection. An illumination source meeting the requirements of 9.3 is required.

10.1.4 Illumination

External illumination shall meet the requirements of 9.3.

Documents
Document Sharing Hub
Full document details: DIN EN ISO 10407-2:2010-08

10.1.5 Inspection procedure

Each pipe shall be visually inspected for imperfections on the entire outside surface. This inspection may be done as a separate inspection or in conjunction with OD gauging (see 10.2). Rolling each length and viewing the entire surface is required. Inspect for visually detectable imperfections.

While illuminating the inside surface, visually examine the internal surface from each end, noting any visually detectable imperfections and the condition of the internal coating.

10.1.6 Evaluation procedures

All external imperfections shall be marked with non-permanent markings to allow easy and quick correlation when it is detected by the electronic inspection.

Imperfections detected that can affect the classification shall be marked and evaluated according to 10.13, based on the type of imperfection.

The condition of the internal coating shall be reported as an estimate of the percent missing or not bonded to the pipe. The condition of the internal coating is not used to classify the pipe.

NOTE The condition of the internal coating does not affect the operating limits of the drill pipe and, therefore, is not included in the classification criteria. Conditions are reported to the owner for information purposes.

Pipe that is bent or bowed more than 76 mm (3.0 in) over the entire length or 12,7 mm (0.5 in) in the first 1,5 m (5,0 ft) from either end shall not be inspected. All lengths that have been straightened shall be inspected after straightening.

Pipe shall not be inspected with drill-pipe rubbers installed.

10.2 Drill body — Outside diameter gauging

10.2.1 Description

The full length of each length shall be checked from upset to upset with an OD gauge to identify diameter reductions. The pipe shall be rolled as the OD gauge is dragged or stabbed along the surface. For each interval of 1,5 m (5.0 ft) of pipe inspected, the pipe shall be rolled a full 360°. Measurement of OD by laser, a vision system or other techniques is acceptable as long as the minimum requirements in 10.2 are met.

10.2.2 Equipment

The typical OD gauge is a go/no-go tool that is used to locate reductions of the pipe outside diameter. The OD gauge detection anvils are set 0,79 mm (0.031 in) smaller than the specified pipe outside diameter [see Tables C.4 or C.5 (Tables D.4 or D.5)]. If the gauge does not fit over the pipe, the diameter reduction is less than 0,79 mm (0.031 in). This tool provides a quick method of scanning the pipe to locate areas where the OD is reduced by 0,79 mm (0.031 in) or more. A calliper is required to measure the length of the standardization bar.

10.2.3 Surface conditions

The outside diameter of the drill-pipe body shall be cleaned to remove scale, mud, etc. Cleaning is done only as required to properly perform the OD gauging.

AVA Documents
Document Sharing Hub

Full document details: DIN EN ISO 10407-2:2010-08

10.2.4 Standardization

10.2.4.1 General

Using callipers, verify that the standardization bar length is 0,79 mm ± 0,13 mm (0.031 in ± 0.005 in) less than the pipe specified outside diameter [see Tables C.4 or C.5 (Tables D.4 or D.5)]. Using the standardization bar, check and adjust the anvils if necessary. The anvils shall be parallel and the standardization bar fit snugly at both ends of the anvil. Ensure that all screws are tight. Adjust the wire indicator, if provided, by placing the standardization bar over the plunger and setting the indicator to the appropriate setting.

10.2.4.2 Frequency of standardization

General standardization of inspection equipment shall be performed at the beginning of each job.

Periodic standardization checks shall be performed as follows:

a) at the beginning of each inspection shift and after each break;

b) at least once per hour of continuous operation or every 25 lengths inspected, whichever occurs first;

c) whenever there is a change in operator (inspector);

d) when the OD gauge is subjected to abnormal mechanical shock;

e) prior to breaks during a job;

f) prior to resuming operation after repair or adjustments;

g) prior to equipment shutdown at the end of the job.

10.2.4.3 Unacceptable checks

All pipe inspected between an unacceptable check and the most recent acceptable check shall be re-inspected.

10.2.5 Inspection procedures

Each length of pipe body shall be OD-gauged along the full length (upset to upset). The pipe shall be rolled at least 180° every 0,8 m (2.5 ft) of gauging. Ensure that all anvils of the OD gauge stay tight during the job (see 10.2.2).

When the gauge goes over the outside diameter of the pipe, the anvil opposite the plunger shall be held firmly against the pipe surface prior to reading the indicator. The pipe shall be rotated a full 180° to search for the maximum reading. Search along the pipe axis on either side of the initial location to find the maximum outside diameter reduction.

Mark the area or spot of maximum outside diameter reduction by placing an “X” next to each parallel anvil. Determine whether the reduction is due to wear or to mechanical deformation (stress-induced).

10.2.6 Wear

If the outside diameter reduction is due to wear, the evaluation for classification shall be based on the remaining wall thickness as specified in 10.13.5.

10.2.7 Stress-induced diameter reductions or increases

If the outside diameter reduction is stress-induced (crushing, necking, dents or mashes), it shall be evaluated in accordance with the procedures for stress-induced diameter reduction in 10.13.6.

If an outside diameter increase is detected (string shot), it shall be evaluated in accordance with procedures for stress-induced diameter increases in 10.13.7.

Documents
Document Sharing Hub
Full document details: DIN EN ISO 10407-2:2010-08

10.3 Pipe body — Ultrasonic wall-thickness gauging

10.3.1 Description

These procedures are used to perform manual ultrasonic wall-thickness measurements to determine the minimum wall in the centre of the pipe or at the point where the OD gauge or other instruments indicate a wall reduction. On drill pipe, this test is normally performed at one location but may be performed at additional locations.

10.3.2 Equipment

10.3.2.1 Ultrasonic thickness gauge

The ultrasonic thickness gauge is used to measure the wall thickness from the outside surface. The gauge typically consists of an ultrasonic transducer, a connecting cable and a battery-powered instrument package with a digital, scope or meter readout. The transducer shall be a dual element and the diameter shall not exceed 9,53 mm (0.375 in). It shall be capable of reading the thickness of a parallel-surface test block within ± 0,025 mm (± 0.001 in) of the actual thickness. If used to measure remaining wall above an internal imperfection, it shall meet the sensitivity requirements of 9.5.1.2.

10.3.2.2 Couplant

A couplant shall be used to wet the surface of the pipe and provide transmission of ultrasound from the transducers into the pipe being tested. It shall be free of contaminants that can interfere with the sensitivity of the inspection or the interpretation of the readout. Rust inhibitors, water softeners, glycerine, antifreeze or wetting agents may be added to the couplant provided they are not detrimental to the pipe surface. The couplant shall be of sufficient viscosity to provide an air-free interface without the necessity of applying excessive pressure on the transducer.

10.3.3 Surface conditions

Surfaces in the area of transducer placement shall be clean and free of loose scale, dirt, grease or any other material that can interfere with a proper zero on the pipe surface, the sensitivity of the inspection or the interpretation of the readout.

10.3.4 Calibration

Ultrasonic thickness gauges shall be calibrated as required in 9.5.1.

10.3.5 Standardization

10.3.5.1 General

If the readout does not remain stable when the transducer is being held securely on the test block, the gauge is malfunctioning. It shall be repaired or replaced prior to standardization or inspection.

All standards used for standardization shall have velocity and attenuation properties similar to the material being inspected. Prior to use, to minimize error due to temperature differences, the standard(s) shall be exposed to the same ambient temperature as the material for 30 min or more. Placement of the standard on the pipe surface and maximizing its contact area can shorten the exposure time to 10 min.

The parting line between the transmitting and receiving transducer shall be perpendicular to the standard or pipe axis. When the parting line of a dual-element transducer is applied at an angle less than perpendicular with the longitudinal axis, the resulting ultrasonic readings can be greater than the actual pipe thickness. The smaller the pipe diameter, the larger the error.

Documents
Document Sharing Hub

Full document details: DIN EN ISO 10407-2:2010-08

Reference standards shall have the same outside surface curvature as the specified outside diameter of the material being measured, except that a flat standard can be used on pipe with specified diameters larger than 88,93 mm (3 1/2 in).

All gauges shall be standardized according to the gauge manufacturer's instructions on a standard thickness that is at least 1,27 mm (0.050 in) thinner than the minimum wall thickness for class 2 and on a second standard thickness that is at least 1,27 mm (0.050 in) thicker than the specified wall thickness of the material being inspected. The thickness of the standard shall have been verified by micrometer measurement. The gauge accuracy shall be within ± 0,025 mm (± 0.001 in) of the standard's thickness on both of the required thickness steps.

When standardizing on reference standards not having the same specified outside surface curvature as the specified outside diameter of the material being measured, the ultrasonic zero shall also be verified on a known thickness curved piece, such as the EMI reference standard.

A concave transducer face causes pipe wall to appear thinner than the actual value when the ultrasonic gauge is standardized on a thickness standard with a greater radius of curvature than the material being inspected. A concave transducer face causes the pipe wall to appear thicker than the actual value when the ultrasonic gauge is standardized on a thickness standard with a smaller radius of curvature than the material being inspected. Because of wear, grinding and other diameter variations, it is important to have the transducer face flat. The transducer shall be checked for wear prior to the start of inspection by comparing accuracy on a curved reference standard and a flat reference standard with the same velocity. If there is no transducer wear, the readings are accurate on both standards. Transducers with a worn face shall be replaced.

10.3.5.2 Frequency of standardization

Periodic standardization checks shall be performed as follows:

a) at the beginning of each inspection shift;

b) at least every 25 areas measured or inspected in a continuous operation;

c) after any power interruption or change in power supply (battery to charger);

d) whenever there is a change of operator (inspector);

e) prior to equipment shutdown during a job;

f) prior to resuming operation after repair or change to a system component that can affect the system performance;

g) whenever the transducer, cable or type of couplant is changed;

h) prior to turning the gauge off at the end of the job;

i) whenever a reading is encountered which is within 0,25 mm (0.010 in) of the minimum permissible remaining wall thickness prior to downgrade.

10.3.5.3 Unacceptable checks

The gauge reading during a standardization check shall be readjusted when there is a variance of more than 0,05 mm (0.002 in) from the original standardization value. All drill pipe inspected between an unacceptable check and the most recent acceptable check shall be re-inspected.

10.3.6 Manual ultrasonic thickness-gauging procedure

A sufficient number of wall-thickness measurements shall be taken around the pipe to locate the minimum wall thickness in the areas of wall reduction as indicated by the OD gauge or other inspection. In the absence of such indication, the wall measurement to locate the minimum wall shall be taken approximately in the centre of the drill-pipe tube.

Documents
Document Sharing Hub
Full document details: DIN EN ISO 10407-2:2010-08

In each area being measured, remove all dirt and loose material that can interfere with the accuracy of the wall-thickness measurement from the external surface and apply a couplant.

For each measurement, allow the reading to stabilize, then compare the reading with the minimum allowable wall thickness. A stable reading is one that maintains the same value ± 0,025 mm (± 0.001 in) for at least 3 s.

When using a highly sensitive gauge, care shall be taken to ensure that detection of an inclusion or lamination is not interpreted as a reduction in wall thickness. Inclusions and laminations shall not be used for classification.

When a borderline reading is encountered, conduct a search around the site of the low reading to detect further reduction. Repeat the search with subsequent low readings until the pipe can be classified.

When a reading is made that can downgrade the material, check the surface condition and scrape loose scale to clean the surface without removing any base metal. Verify the gauge standardization and re-check the thickness measurement. The final reading shall be used to classify the pipe according to the wear criteria in 10.13.5.

10.4 Pipe body — Full-length electromagnetic inspection (EMI)

10.4.1 Description

Flux-leakage detection equipment uses a strong magnetic field applied to the region of the pipe under the sensors to create a leakage field if properly oriented discontinuities are present. The sensors covered here detect magnetic-flux leakage fields over the pipe external surface at the location of transverse and volumetric imperfections.

10.4.2 Equipment

EMI equipment covered by this part of ISO 10407 includes flux-leakage detection equipment utilizing search coils or Hall-effect sensors. Imperfections are detected by passing the magnetized pipe through a fixed encircling scanner or by propelling the encircling sensors along the length of the magnetized pipe.

The inspection assembly shall be sized according to the size of pipe being inspected.

10.4.3 Surface preparation

The outside diameter of the pipe from upset to upset shall be cleaned to remove scale, mud and coating that can interfere with detector ride and pipe or inspection assembly movement.

10.4.4 Calibration

Electromagnetic inspection units, coils and reference standards shall be calibrated as required in 9.6.

10.4.5 Standardization

10.4.5.1 Reference standards

EMI reference standards are used to establish a common sensitivity for all the detectors; reference indictor dimensions as well as the wall thickness of the reference standard are not specified. Reference standard surface conditions shall meet the requirements of 10.4.3. The reference standard shall be of the same specified outside diameter as the pipe being inspected. The reference standard may have one or multiple reference indicators. Reference indicators are typically 1,5 mm (1/16 in) through-wall drilled holes. If multiple holes are used, they shall be spaced so that each indication can be seen independent of the others. Multiple-hole reference standards shall be checked according to 9.6.4.

Documents
Document Sharing Hub

Full document details: DIN EN ISO 10407-2:2010-08

10.4.5.2 Detector sensitivity adjustment

The reference standard shall be inspected at production speed to produce a reference signal from each detector. This requires multiple passes for a single reference indicator standard. The instrumentation should be adjusted to produce an indication having amplitude equal to or greater than 25 % of full scale and clearly identifiable above background noise for each detector. All detectors shall be adjusted to the same signal level ± 10 % of the average amplitude. Full-scale indicators are not allowed since positive variances cannot be determined.

10.4.5.3 Signal-to-noise ratio

Equipment shall provide a minimum signal-to-noise ratio (S/N) of 3 to 1 for reference indicators.

10.4.5.4 Frequency of standardization

General standardization of EMI inspection equipment shall be performed at the beginning of each job.

Periodic standardization checks shall be performed as follows:

a) at the beginning of each inspection shift;

b) at least every 50 lengths measured or inspected in a continuous operation;

c) after any power interruption;

d) prior to equipment shutdown during a job;

e) prior to resuming operation after repair or change to a system component that can affect the system performance;

f) whenever the detector, connector or current setting are changed;

g) prior to equipment shutdown at the end of the job.

10.4.5.5 Unacceptable checks

Each time the reference standard is inspected, all signals shall be within 20 % of the standardization amplitude. If the periodic check does not meet the above standard, all pipe inspected between an unacceptable check and the most recent acceptable check shall be re-inspected.

10.4.6 Inspection procedures

10.4.6.1 Travelling-head unit on drill pipe

When using travelling-head inspection assemblies, the tool joints on both ends of the pipe shall be bumped with the detectors leading, unless it can be demonstrated that it is not necessary to obtain coverage of the entire pipe body by system-capability demonstration in accordance with 6.5 b). Place the inspection head on the pipe facing the tool joint approximately 0,91 m (3 ft) from the near tool joint, place the coil over the travelling head and inspect the last 0,91 m (3 ft) by propelling the travelling head towards the tool joint until it is stopped by the tool joint. Turn the travelling head around, place the coil back over the travelling head and inspect toward the far tool joint until the travelling head is stopped by the tool joint.

10.4.6.2 Stationary unit

When using a stationary unit, pass each length through the EMI inspection unit.

Documents
Document Sharing Hub
Full document details: DIN EN ISO 10407-2:2010-08

10.4.6.3 Speed

If the speed varies by more than 10 % from the standardization speed, the area in question shall be re-inspected at the proper speed.

10.4.6.4 Evaluation threshold

A signal amplitude requiring evaluation (threshold) shall be established in accordance with the agency's standard operating procedure and shall not be greater than the reference level. Signals exceeding the threshold shall be located and marked on the outside surface for the full extent of each indication. Evaluate all marked indications in accordance with 10.13.

10.4.6.5 Inspection records

A readout of imperfection indications detected and a record of the inspection shall be made and identified. These documents shall be retained by the agency for a minimum of one year.

NOTE A one-year record retention is sufficient in most situations. If longer retention is required, it is necessary that specific requirements be addressed between the owner/operator and the agency.

10.5 Pipe body — Full-length ultrasonic transverse and wall thickness

10.5.1 General

In 10.5 the equipment requirements and procedures used to perform ultrasonic inspection of the used drill-pipe body between the pipe upsets are described. This inspection is performed to detect transverse imperfections on the inside and outside surface of the pipe. Additionally, the inspection system shall monitor wall thickness for the entire area inspected.

10.5.2 Equipment

The ultrasonic instrument shall be the pulse-echo type with an A-scan presentation. Gain control increments shall be no greater than 0,5 dB. The unit shall have both audible and visual alarms. The units shall be equipped with a strip chart recorder or a digital data-acquisition-and-display system capable of capturing and storing inspection information. The display system shall be capable of displaying information from each transducer orientation individually. The reject control, if available, shall not be used unless it can be demonstrated that it does not affect linearity.

Transducer frequency between 2,25 MHz and 10,0 MHz should be used.

The couplant shall provide an effective acoustic contact between the transducer beams and the pipe surface. The surface shall be free of contaminants that can interfere with the sensitivity of the inspection or the interpretation of the readout. Rust inhibitors, water softeners, glycerine, antifreeze or wetting agents may be added to the couplant provided that they are not detrimental to the pipe surface. A means of monitoring effective acoustic coupling should also be used.

Separate sound beams shall be used for the detection of transverse and wall thickness. The combination of linear and rotational speed of the material and/or scanner shall produce 100 % full-body coverage based upon the effective beam width (EBW) of the transducer and the distance between successive pulses [pulse density (PD)] for each instrument channel. The material may be pre-wet or submerged in part or totally for scanning. the couplant shall provide an effective acoustic contact between the transducer beams and the pipe surface. The EBW and PD shall be defined by the agency.

Shear-wave sound beams are propagated in at least one longitudinal direction to provide for the detection of imperfections oriented transverse to the major axis. The sensitivity of the system shall enable it to detect, display and record transversely oriented and three-dimensional imperfections, such as, but not limited to, cracks and pits.

Compression-wave sound beams propagated normal to the material surface are used to measure wall thickness.

Documents
Document Sharing Hub

Full document details: DIN EN ISO 10407-2:2010-08

10.5.3 Surface preparation

All drill pipe surfaces to be inspected shall be cleaned as required to remove loose scale, dirt, grease, or any other material that may interfere with the sensitivity of the inspection or the interpretation of the readout.

10.5.4 Calibration

Ultrasonic flaw-detector units shall be calibrated as required in 9.5.2.

The sensors and readout of equipment used to verify coverage (rollers, rotators, etc.) shall be calibrated every six months.

Displays associated with gain (dB) controls shall be calibrated for linearity at least every six months.

10.5.5 Reference standard

The reference standard shall be of a sufficient length for periodic dynamic checks and shall be of the same specified outside diameter, specified wall thickness and acoustical properties as the pipe being inspected.

The reference standard shall contain internal and external transverse surface notches. Reference notches used for standardization shall meet the following requirements:

— maximum length: 12,7 mm (0.5 in);

— maximum depth: 5 % of specified wall thickness;

— maximum width: 1,0 mm (0.040 in).

The effect of the reference notches on signal amplitude shall be verified by comparing the peak amplitudes from both sides of the reflector. The amplitude from one side of the notch shall be at least 79 % (2 dB) of the amplitude from the other side.

New drill pipe shall be manufactured to comply with the requirements of ISO 11961. The 5 % notch specified for used drill pipe in this part of ISO 10407 is established to provide for enhanced detection of fatigue cracks. Standardizing on the 5 % notch can produce indications that are acceptable based on ISO 11961 criteria.

Notches shall be separated such that the indication from each is distinct and separate from the others and from other anomalies or end effects.

The wall-thickness standard may be a separate standard or incorporated into the notched standard. The wall-thickness standard shall contain at least two thicknesses that allow adjustment of the readout over an appropriate range of thickness values for the material being inspected. The reference thicknesses should be verified by measurement with a micrometer or standardized ultrasonic thickness gauge. One thickness shall be equal to or greater than the specified wall thickness of the tube being inspected. The other thickness shall be less than 70 % of the specified thickness. The equipment's readout of wall thickness shall be adjusted to read the reference thicknesses to within 0,25 mm (0.010 in) or 2 % of the specified wall thickness, whichever is the smaller.

10.5.6 Static standardization

The A-scan display range shall be adjusted to at least one-and-a-half skips.

Instrumentation shall be adjusted to produce reference signal amplitudes of at least 60 % of full scale of the readout for each transducer. The signal from each transducer shall respond to within 10 % of the average signal height for all transducers of the same orientation.

Documents
Document Sharing Hub
Full document details: DIN EN ISO 10407-2:2010-08

A threshold shall be established in accordance with the agency's standard operating procedures and shall not be greater than 60 % of the reference level. The inside and outside surface gates shall be positioned so as to totally encompass the signals received from the inside and outside surfaces, respectively.

Equipment gain and threshold adjustments shall ensure a minimum signal-to-noise ratio (S/N) of 3 to 1.

10.5.7 Dynamic standardization

On rotating systems, the helix shall be sufficient so that all signals are repeatable within two decibels on repeated passes.

A dynamic standardization check shall be performed to ensure repeatability by inspecting the reference standard at production speeds two consecutive times. If the amplitude of the notch for one run is less than 79 % (2 dB) of the amplitude from the other run of the same orientation and notch type, the system shall be adjusted and the dynamic standardization repeated.

10.5.8 Standardization checks

10.5.8.1 Standardization of ultrasonic inspection equipment shall be performed at the beginning of each job.

Additional checks of standardization shall be performed as follows:

a) at the beginning of each inspection shift;

b) at least once every 4 h of continuous operation or every 50 lengths inspected, whichever occurs first for mechanized units;

c) after any power interruption;

d) prior to equipment shutdown during a job;

e) prior to resuming operation after repair or change to a system component that can affect system performance;

f) whenever a transducer or cable is changed or mechanical adjustment to the transducer is made;

g) prior to equipment shutdown at the end of the job.

10.5.8.2 Unacceptable check conditions

The following conditions constitute an unacceptable check.

a) A standardization check indicates a change in reference level exceeding 2 dB.

b) A standardization check shows that any one of the reference points has shifted by more than 5 % of its sweep reading.

All areas inspected between an unacceptable check and the most recent acceptable check shall be re-inspected.

10.5.9 Inspection procedure

Inspect each length, covering the entire inspection area between the upsets, ensuring 100 % coverage. Units with one transverse detector shall scan the last 914 mm (36 in) on each end with the transducer orientation toward the upset and tool joint. The sequence of inspection by the various scanners is not specified, but each one shall perform its respective function effectively and without detrimental interaction with other scanners. As an aid in locating imperfections, additional gain may be used for scanning.

AVA Documents
Document Sharing Hub

Full document details: DIN EN ISO 10407-2:2010-08

Indications exceeding the reference signal amplitude established in accordance with 10.5.6 shall be located and marked on the outside surface for the full extent of each indication. Evaluate all marked indications in accordance with 10.13.

A readout of imperfection indications detected and a record of the inspection shall be made and identified. These documents should be retained by the agency for a minimum of one year.

NOTE A one-year record retention is sufficient in most situations. If longer retention is required, it is necessary that specific requirements be addressed between the owner/operator and the agency.

10.6 Pipe body — Full-length ultrasonic transverse, wall thickness and longitudinal inspection

10.6.1 General

In 10.6 the equipment requirements and procedures used to perform ultrasonic inspection of the used drill-pipe tube body between the upsets are described. This inspection is performed to detect transverse and longitudinal imperfections on the inside and outside surface of the pipe. Additionally, the inspection system shall monitor wall thickness for the entire area inspected

10.6.2 Equipment

The ultrasonic instrument shall be the pulse-echo type with an A-scan presentation. Gain-control increments shall be no greater than 0,5 dB. The unit shall have both audible and visual alarms. The units shall be equipped with a strip-chart recorder or a digital data-acquisition-and-display system capable of capturing and storing inspection information. The display system shall be capable of displaying information from each transducer orientation individually. The reject control, if available, shall not be used unless it can be demonstrated that it does not affect linearity.

A transducer frequency between 2,25 MHz and 10,0 MHz should be used.

The couplant shall provide an effective acoustic contact between the transducer beams and the pipe surface. The surface shall be free of contaminants that can interfere with the sensitivity of the inspection or the interpretation of the readout. Rust inhibitors, water softeners, glycerine, antifreeze or wetting agents may be added to the couplant provided they are not detrimental to the pipe surface. A means of monitoring effective acoustic coupling should also be used.

Separate sound beams shall be used for the detection of transverse, longitudinal and wall thickness. The combination of linear and rotational speed of the material and/or scanner shall produce 100 % full-body coverage based upon the EBW of the transducer and the distance between successive pulses for each instrument channel. The material may be pre-wet or submerged in part or totally for scanning. The couplant shall provide an effective acoustic contact between the transducer beams and the pipe surface. The EBW and PD shall be defined by the agency.

10.6.3 Inspections

10.6.3.1 Inspections for longitudinal imperfections

Shear-wave sound beams are propagated clockwise and counter-clockwise by two or more transducers. The sensitivity of the system shall enable it to detect, display and record imperfections oriented parallel to the major axis, such as, but not limited to, seams, laps and cracks.

The angle of the sound beam chosen for inspection shall ensure intersection with the material inside surface.

Documents
Document Sharing Hub
Full document details: DIN EN ISO 10407-2:2010-08

10.6.3.2 Inspection for transverse imperfections

Shear-wave sound beams are propagated in each longitudinal direction to provide for the detection of imperfections oriented transverse to the major axis. The sensitivity of the system shall enable it to detect, display and record transversely oriented and three-dimensional imperfections, such as, but not limited to, cracks and pits.

10.6.3.3 Inspection for wall thickness

Compression-wave sound beams propagated normal to the materials surface are used to measure wall thickness.

10.6.4 Surface preparation

All drill-pipe surfaces being inspected shall be cleaned as required to remove loose scale, dirt, grease or any other material that can interfere with the sensitivity of the inspection or the interpretation of the readout.

10.6.5 Calibration

Ultrasonic flaw detector units shall be calibrated as required in 9.5.2.

Sensors and readout equipment used to verify coverage (rollers, rotators, etc.) shall be calibrated every six months.

Displays associated with gain (dB) controls shall be calibrated for linearity at least every six months.

10.6.6 Standardization

A reference standard shall be of a sufficient length for periodic dynamic checks and shall be of the same specified outside diameter, specified wall thickness and acoustical properties as the pipe to be inspected.

A reference standard shall contain internal and external transverse and longitudinal notches. Reference notches used for standardization shall meet the following requirements:

— maximum length: 12,7 mm (0.5 in);

— maximum depth: 5 % of specified wall thickness for pipe;

— maximum width: 1,0 mm (0.040 in).

The effect of the reference notches on signal amplitude shall be verified by comparing the peak amplitudes from both sides of the reflector. The amplitude from one side of the notch shall be at least 79 % (2 dB) of the amplitude from the other side.

New drill pipe shall be manufactured to comply with the requirements of ISO 11961. The 5 % notch specified for used drill pipe in this part of ISO 10407 is established to provide for enhanced detection of fatigue cracks. Standardizing on the 5 % notch can produce indications that are acceptable based on ISO 11961 criteria.

Notches shall be separated such that the indication from each is distinct and separate from the others and from other anomalies or end effects.

The wall-thickness standard may be a separate standard or incorporated into the notched standard. The wall-thickness standard shall contain at least two thicknesses that allow adjustment of the readout over an appropriate range of thickness values for the material being inspected. The reference thicknesses should be verified by measurement with a micrometer or standardized ultrasonic thickness gauge. One thickness shall be equal to or greater than the specified wall thickness of the tube being inspected. The other thickness shall be less than 70 % of the specified thickness. The equipment's readout of wall thickness shall be adjusted to read the reference thicknesses within 0,25 mm (0.010 in) or 2 % of the specified wall thickness, whichever is the smaller.

AVA Documents
Document Sharing Hub

Full document details: DIN EN ISO 10407-2:2010-08

10.6.7 Static standardization

The A-scan display range shall be adjusted to at least one-and-a-half skip.

Instrumentation shall be adjusted to produce reference-signal amplitudes of at least 60 % of the full scale of the readout for each transducer. The signal from each transducer shall respond within 10 % of the average signal height for all detectors of the same orientation.

Equipment gain and threshold adjustments shall ensure a minimum signal-to-noise ratio (S/N) of 3 to 1.

10.6.8 Dynamic standardization

10.6.8.1 General

On rotating systems, the helix shall be sufficient so that all signals are repeatable within 2 dB on repeated passes.

A dynamic standardization check shall be performed to ensure repeatability by inspecting the reference standard at production speeds two consecutive times. If the amplitude of the notch for one run is less than 79 % (2 dB) of the amplitude from the other run of the same orientation and notch type, the system shall be adjusted and the dynamic standardization repeated.

10.6.8.2 Ultrasonic inspection equipment

Standardization of ultrasonic inspection equipment shall be performed at the beginning of each job.

Additional checks of standardization shall be performed as follows:

a) at the beginning of each inspection shift;

b) at least once every 4 h of continuous operation or every 50 lengths inspected, whichever occurs first for mechanized units;

c) after any power interruption;

d) prior to equipment shutdown during a job;

e) prior to resuming operation after repair or change to a system component that can affect system performance;

f) whenever a transducer or cable is changed or mechanical adjustment to the transducer is made;

g) prior to equipment shutdown at the end of the job.

10.6.8.3 Unacceptable check conditions

The following conditions constitute an unacceptable check.

a) A standardization check indicates a reduction in signal amplitude from the reference flaw exceeding 2 dB.

b) A standardization check shows that any reference point has shifted by more than 5 % of its sweep reading.

All areas inspected between an unacceptable check and the most recent acceptable check shall be re-inspected.

Documents
Document Sharing Hub
Full document details: DIN EN ISO 10407-2:2010-08

10.6.9 Inspection procedure

Inspect each length, covering the entire inspection area between the upsets, ensuring at least 100 % coverage. The sequence of inspection by the various scanners is not specified, but each one shall perform its respective function effectively and without detrimental interaction with other scanners. As an aid in locating imperfections, additional gain may be used for scanning.

Indications exceeding the reference signal amplitude established in 10.7 shall be located and marked on the outside surface for the full extent of each indication. Evaluate all marked indications in accordance with 10.13.

As an aid in locating imperfections, additional gain may be used for scanning.

A readout of imperfection indications detected and a record of the inspection shall be made and identified. These documents should be retained by the agency for a minimum of one year.

NOTE The one-year record retention is sufficient in most situations. If longer retention is required, it is necessary that specific requirements be addressed between the owner/operator and the agency.

10.7 Drill-pipe body — External magnetic-particle inspection of the critical area

10.7.1 General

In 10.7 equipment requirements, descriptions and procedures for dry magnetic-particle inspection of the external surface of the critical area on used drill-pipe tubes are provided. Wet fluorescent magnetic-particle or white background and black wet-particle techniques may be substituted for dry magnetic particles. This inspection is performed primarily to detect transverse cracks on the outside diameter surface of the pipe. This inspection is also applied to HWDP. These inspection procedures may be applied to BHA drill stem elements to cover specific areas as well as full-length inspection.

For the purposes of this part of ISO 10407, the critical area extends from the base of the tapered shoulder of the tool joint to a plane located at a distance of 660 mm (26.0 in) or to the end of the slip marks, whichever is greater (see Figure 4). On HWDP, the area 457 mm (18.0 in) on either side of the centre wear pad is also inspected.

10.7.2 Equipment

10.7.2.1 Longitudinal field

An AC yoke or a coil, either AC or DC (HWAC, FWAC or filtered FWAC or pulsating DC), may be used for this inspection. The number of turns of the coil shall be clearly marked on the coil.

10.7.2.2 Dry magnetic particles

Dry magnetic particles shall meet the requirements of 9.4.8.2. A powder bulb capable of applying magnetic particles in a light dusting shall be used.

10.7.2.3 Wet magnetic particles

10.7.2.3.1 Fluorescent-particle inspection

Fluorescent magnetic-particle solutions complying with the requirements of 9.4.8.3 may be used as an alternative method. An ultraviolet light source, fluorescent magnetic particles, a 100 ml centrifuge tube (graduated in 0,05 ml increments) and an ultraviolet light meter are required. If the particles are supplied as an aerosol, the centrifuge tube is not required.

AVA Documents
Document Sharing Hub

Full document details: DIN EN ISO 10407-2:2010-08

10.7.2.3.2 White background and black magnetic particles

White background and black magnetic-particle wet-inspection aerosol materials shall be from the same manufacture, or specified as compatible by the product manufacturer and used in accordance with the manufacturer's requirements.

10.7.3 Illumination

Illumination of the inspection surfaces for visual inspection and visible-light magnetic-particle inspection shall comply with the requirements of 9.3.2.

Illumination of the surfaces for fluorescent magnetic-particle inspection shall comply with the requirements of 9.4.8.5.

10.7.4 Surface preparation

The inspection areas shall be cleaned of all grease, thread compound, dirt and any other foreign matter that can interfere with particle mobility and indication detection. When using dry magnetic-particle techniques, all surfaces being inspected shall be powder dry.

Surface coatings (paint, etc.), including white background coating if a white background and black magnetic particle system is used, shall be smooth and shall have a thickness $\leqslant$ 0,05 mm (0.002 in).

10.7.5 Calibration

Equipment calibration is covered in Clause 9.

10.7.6 Standardization

10.7.6.1 DC coil

Select a typical pipe from the string for inspection. Place the coil on the pipe with the centreline approximately 305 mm (12.0 in) from the tapered shoulder. Energize the coil to establish a residual longitudinal field. Using the residual field, apply magnetic particles to the area 305 mm (12.0 in) on either side of the coil. Observe any magnetic-particle build-up (furring) near the end of the 305 mm (12.0 in) inspection area on either side of the coil. If there is no magnetic-particle build-up, increase the magnetic field strength and reapply magnetic particles. If there is a magnetic-particle build-up, reverse the coil and apply slightly less current. Continue until only light magnetic-particle build-up is present in inspection area. Note the amperage required to establish the magnetic field; that amperage becomes the magnetizing level for use during inspection.

For wet particles, observe the magnetic-particle mobility near the end of the 305 mm (12.0 in) on either side of the coil. If the magnetic particles continue to flow for longer than 10 s, increase the magnetic field strength and reapply magnetic particles. If the magnetic particles are pulled out of suspension prematurely, i.e. during less than 6 s, reverse the coil and apply slightly less current. Continue until the magnetic particle mobility is from 6 s to 10 s after application. Note the amperage required to establish the magnetic field; that amperage becomes the magnetizing level for use during inspection.

NOTE Excessive ampere-turns (NI) can produce furring of dry magnetic particles on the outside surface that can conceal indications. Excessive ampere-turns (NI) can cause lack of mobility of wet particles that results in increased background noise and can reduce the indication brightness.

10.7.6.2 AC coil

Select a typical pipe from the string for inspection. Place the coil on the pipe with the centreline approximately 305 mm (12.0 in) from the tapered shoulder. Energize the coil and apply magnetic particles to both sides of the coil and observe the distance over which the particles have definitive movement due to the magnetic field [normally 76 mm (3 in) to 102 mm (4 in)]. This distance becomes the inspection distance for each placement of the AC coil.

Documents
Document Sharing Hub
Full document details: DIN EN ISO 10407-2:2010-08

10.7.7 Inspection procedures

10.7.7.1 Steps for inspection

The steps for inspection found in 10.7.7 are the minimum requirements and can vary depending upon the drill-pipe condition and the options agreed to between the owner and the agency.

The steps for inspection are as follows.

a) Inspect the entire critical area for visually detectable imperfections.

b) Place the coil over the first area to be inspected.

c) For the DC coil, the maximum coverage area for each coil placement is 305 mm (12.0 in) on either side of the coil centreline.

d) For the AC coil, the distance established in 10.7.6.2 above is the maximum inspection distance.

e) Multiple placements are required to inspect the entire area.

10.7.7.2 DC coils

For DC coils, energize the coil with the magnetizing current level established during standardization for at least 1 s.

The steps for inspection are as follows.

a) Turn the coil off.

b) Move the coil out of the way and conduct a magnetic-particle inspection, covering the inspection area [maximum 305 mm (12.0 in) on either side of the coil centreline] completely around the pipe, paying particular attention to the root of any cuts, gouges, corrosion pits and/or slip cuts.

c) Repeat the process with at least a 51 mm (2 in) overlap until the entire area being inspected has been covered.

d) Remove magnetic particles after inspection.

10.7.7.3 AC coils

For AC coils, place the coil over the area being inspected and energize the coil.

The steps for inspection are as follows.

a) With the current on, conduct the inspection of the pipe in the coverage area completely around the pipe, paying particular attention to the tube area adjacent to the upset, the root of any cuts, gouges, corrosion pits and/or slip cuts.

b) Repeat the process with at least a 25 mm (1.0 in) overlap until the entire area being inspected has been covered.

c) Remove magnetic particles after inspection.

10.7.8 Evaluation

Evaluate all imperfections in accordance with 10.13.

Documents
Document Sharing Hub

Full document details: DIN EN ISO 10407-2:2010-08

10.8 Drill-pipe body — Bi-directional external magnetic-particle inspection of the critical area

10.8.1 General

In 10.8 equipment requirements, descriptions and procedures for magnetic-particle inspection of the external surface of the critical area on used drill-pipe tubes are provided. The wet florescent magnetic-particle or white background and black magnetic-particle wet method shall be used. This inspection is performed to detect transverse and longitudinal cracks on the outside diameter surface of the pipe. This inspection is also applied to HWDP. These inspection procedures may be applied to BHA drill stem elements to cover specific areas as well as full-length inspection.

For the purposes of this part of ISO 10407, the critical area is from the base of the tapered shoulder of the tool joint to a plane located at a distance of 660 mm (26.0 in) or to the end of the slip marks, whichever is greater (see Figure 4). On HWDP, the area 457 mm (18.0 in) on either side of the centre wear pad is inspected.

10.8.2 Equipment

10.8.2.1 Longitudinal field

An AC yoke or a coil, either AC or DC (HWAC, FWAC or filtered FWAC or pulsating DC), may be used for this inspection. The number of turns of the coil shall be clearly marked on the coil.

10.8.2.2 Transverse/circular field

An AC yoke or internal conductor may be used. The current for the internal conductor may be supplied with DC, a three-phase rectified AC power supply or capacitor-discharge power supply. The power supply shall be capable of meeting the amperage requirements of Table C.2 (Table D.2). Table C.4 (Table D.4) provides the nominal linear mass [mass per metre (foot)] for various pipe sizes.

10.8.2.3 Wet magnetic particles

10.8.2.3.1 Fluorescent-particle inspection

Fluorescent magnetic-particle solutions shall comply with the requirements of 9.4.8.3. An ultraviolet light source, fluorescent magnetic particles, a 100 ml centrifuge tube (graduated in 0,05 ml increments) and an ultraviolet light meter are required. If the particles are supplied as an aerosol, the centrifuge tube is not required.

10.8.2.3.2 White background and black magnetic particles

White background and black magnetic-particle wet-inspection aerosol materials shall be from the same manufacturer, or specified as compatible by the product manufacturer and used in accordance with the manufacturer's requirements.

10.8.3 Illumination

Illumination of the inspection surfaces for visual inspection and visible-light black magnetic-particle inspection shall comply with the requirements of 9.3.2.

Illumination of the surfaces for fluorescent magnetic-particle inspection shall comply with the requirements of 9.4.8.5.

Documents
Document Sharing Hub
Full document details: DIN EN ISO 10407-2:2010-08