DEUTSCHE NORM

September 2008

DIN EN ISO 10440-1

DIN

ICS 75.180.20

Ersatz für
DIN EN ISO 10440-1:2004-02

Erdöl-, petrochemische und Erdgasindustrie – Rotierende Verdrängerkompressoren – Teil 1: Prozesskompressoren (ISO 10440-1:2007); Englische Fassung EN ISO 10440-1:2007

Petroleum, petrochemical and natural gas industries – Rotary-type positive-displacement compressors – Part 1: Process compressors (ISO 10440-1:2007); English version EN ISO 10440-1:2007

Industries du pétrole, pétrochimique et du gaz naturel – Compresseurs volumétriques de type rotatif – Partie 1: Compresseurs de procédé (ISO 10440-1:2007); Version anglaise EN ISO 10440-1:2007

Gesamtumfang 142 Seiten

Normenausschuss Erdöl- und Erdgasgewinnung (NÖG) im DIN
Normenausschuss Maschinenbau (NAM) im DIN

AVA Documents
Document Sharing Hub

Full document details: DIN EN ISO 10440-1:2008-09

Nationales Vorwort

Dieses Dokument (EN ISO 10440-1:2007) wurde vom Technischen Komitee ISO/TC 118 „Compressors and pneumatic tools, machines and equipment“ in Zusammenarbeit mit dem Technischen Komitee CEN/TC 12 „Materialien, Ausrüstungen und Offshore-Bauwerke für die Erdöl-, petrochemische und Erdgasindustrie“ erarbeitet, dessen Sekretariat vom AFNOR (Frankreich) gehalten wird.

Es handelt sich hierbei um die unveränderte Übernahme von ISO 10440-1:2007, erarbeitet vom, Subkomitee SC 1, „Process compressors“ (Sekretariat: NEN, Niederlande) in Zusammenarbeit mit ISO/TC 67 „Materials, equipment and offshore structures for petroleum, petrochemical and natural gas industries“, Subkomitee SC 6 „Processing equipment and systems“ (Sekretariat: AFNOR, Frankreich).

Das zuständige deutsche Gremium ist der NA 109-00-06 AA „Verfahrenstechnische Anlagen und Ausrüstungen“ im Normenausschuss Erdöl- und Erdgasgewinnung (NÖG).

Diese Europäische Norm enthält unter Berücksichtigung des DIN-Präsidialbeschlusses 1/2004 nur die englische Originalfassung der ISO-Norm.

Diese Norm enthält neben den gesetzlichen Einheiten auch die Einheiten „Btu“, „°F“, „ft“, „inch“, „lb“, „lbf“, „psi“, „R (Rankine)“, die im Deutschen Normenwerk nicht zugelassen sind. Es wird jedoch ausdrücklich darauf hingewiesen, dass die Anwendung dieser Einheiten im nationalen amtlichen und geschäftlichen Verkehr aufgrund des Gesetzes über Einheiten im Messwesen nicht zulässig ist.

Umrechnung:

1 Btu	= 1 055 J
°C	= (5/9) (°F – 32)
1 ft	= 0,304 8 m
1 inch	= 25,4 mm
1 lb	= 0,453 592 37 kg
1 lbf	= 4,448 222 N
1 psi	= 6 894,757 Pa
°C	= (5/9) (°R – 491,67)

Änderungen

Gegenüber DIN EN ISO 10440-1:2004-02 wurde folgende Änderung vorgenommen:

a) die Norm wurde technisch komplett überarbeitet.

Frühere Ausgaben

DIN EN ISO 10440-1: 2004-02

Documents
Document Sharing Hub

Full document details: DIN EN ISO 10440-1:2008-09

EUROPEAN STANDARD

NORME EUROPÉENNE

EUROPÄISCHE NORM

EN ISO 10440-1

December 2007

ICS 75.180.20

Supersedes EN ISO 10440-1:2000

English Version

Petroleum, petrochemical and natural gas industries – Rotary-type positive-displacement compressors – Part 1: Process compressors (ISO 10440-1:2007)

Industries du pétrole, pétrochimique et du gaz naturel – Compresseurs volumétriques de type rotatif – Partie 1: Compresseurs de procédé (ISO 10440-1:2007)

Erdöl-, petrochemische und Erdgasindustrie – Rotierende Verdrängerkompressoren – Teil 1: Prozesskompressoren (ISO 10440-1:2007)

This European Standard was approved by CEN on 13 July 2007.

CEN members are bound to comply with the CEN/CENELEC Internal Regulations which stipulate the conditions for giving this European Standard the status of a national standard without any alteration. Up-to-date lists and bibliographical references concerning such national standards may be obtained on application to the CEN Management Centre or to any CEN member.

This European Standard exists in three official versions (English, French, German). A version in any other language made by translation under the responsibility of a CEN member into its own language and notified to the CEN Management Centre has the same status as the official versions.

CEN members are the national standards bodies of Austria, Belgium, Bulgaria, Cyprus, Czech Republic, Denmark, Estonia, Finland, France, Germany, Greece, Hungary, Iceland, Ireland, Italy, Latvia, Lithuania, Luxembourg, Malta, Netherlands, Norway, Poland, Portugal, Romania, Slovakia, Slovenia, Spain, Sweden, Switzerland and United Kingdom.

EUROPEAN COMMITTEE FOR STANDARDIZATION
COMITÉ EUROPÉEN DE NORMALISATION
EUROPÄISCHES KOMITEE FÜR NORMUNG

Management Centre: rue de Stassart, 36 B-1050 Brussels

© 2007 CEN All rights of exploitation in any form and by any means reserved worldwide for CEN national Members.

Ref. No. EN ISO 10440-1:2007: E

Documents
Document Sharing Hub

Full document details: DIN EN ISO 10440-1:2008-09

Contents

Page

Foreword ... 4
Introduction ... 5
1 Scope ... 6
2 Normative references ... 6
3 Terms and definitions ... 9
4 General ... 14
4.1 Pressure design code ... 14
4.2 Unit responsibility ... 14
4.3 Units of measurement ... 15
4.4 Statutory requirements ... 15
5 Basic design ... 15
5.1 General ... 15
5.2 Pressure casing ... 19
5.3 Casing connections ... 21
5.4 External forces and moments ... 23
5.5 Rotating elements ... 23
5.6 Shaft seals ... 24
5.7 Dynamics ... 31
5.8 Bearings ... 36
5.9 Bearing housings ... 39
5.10 Lube-oil and seal-oil systems ... 40
5.11 Materials ... 44
5.12 Nameplates and rotation arrows ... 49
5.13 Quality ... 49
6 Accessories ... 50
6.1 Drivers ... 50
6.2 Couplings and guards ... 51
6.3 Mounting plates ... 52
6.4 Controls and instrumentation ... 54
6.5 Piping ... 60
6.6 Intercoolers and aftercoolers ... 61
6.7 Inlet air filters ... 62
6.8 Inlet separators ... 63
6.9 Pulsation suppressors/silencers for dry screw compressors ... 63
6.10 Special tools ... 65
7 Inspection, testing and preparation for shipment ... 66
7.1 General ... 66
7.2 Inspection ... 66
7.3 Testing ... 68
7.4 Preparation for shipment ... 73
8 Vendor's data ... 75
8.1 General ... 75
8.2 Proposals ... 76
8.3 Contract data ... 78
Annex A (informative) Typical datasheets ... 80
Annex B (informative) Nomenclature for rotary-type positive-displacement compressors ... 99

Documents
Document Sharing Hub
Full document details: DIN EN ISO 10440-1:2008-09

Page

Annex C (normative) **Forces and moments** 104
Annex D (normative) **Procedure for determination of residual unbalance** 107
Annex E (normative) **Typical schematics for pressurized oil systems for flooded screw compressors** 115
Annex F (informative) **Materials and their specifications for rotary compressors** 121
Annex G (informative) **Typical mounting plate arrangements** 124
Annex H (informative) **Inspector's checklist** 126
Annex I (informative) **Typical vendor drawing and data requirements** 128
Bibliography 138

Documents
Document Sharing Hub
Full document details: DIN EN ISO 10440-1:2008-09

Foreword

This document (EN ISO 10440-1:2007) has been prepared by Technical Committee ISO/TC 118 “Compressors, pneumatic tools and pneumatic machines” in collaboration with Technical Committee CEN/TC 12 “Materials, equipment and offshore structures for petroleum, petrochemical and natural gas industries” the secretariat of which is held by AFNOR.

This European Standard shall be given the status of a national standard, either by publication of an identical text or by endorsement, at the latest by June 2008, and conflicting national standards shall be withdrawn at the latest by June 2008.

Attention is drawn to the possibility that some of the elements of this document may be the subject of patent rights. CEN [and/or CENELEC] shall not be held responsible for identifying any or all such patent rights.

This document supersedes EN ISO 10440-1:2000.

According to the CEN/CENELEC Internal Regulations, the national standards organizations of the following countries are bound to implement this European Standard: Austria, Belgium, Bulgaria, Cyprus, Czech Republic, Denmark, Estonia, Finland, France, Germany, Greece, Hungary, Iceland, Ireland, Italy, Latvia, Lithuania, Luxembourg, Malta, Netherlands, Norway, Poland, Portugal, Romania, Slovakia, Slovenia, Spain, Sweden, Switzerland and the United Kingdom.

Endorsement notice

The text of ISO 10440-1:2007 has been approved by CEN as a EN ISO 10440-1:2007 without any modification.

Documents
Document Sharing Hub

Full document details: DIN EN ISO 10440-1:2008-09

Introduction

This part of ISO 10440 is based on API 619, 4th edition, December 2004, with the intent that the 5th edition of API 619 will be identical to this part of ISO 10440.

Users of this part of ISO 10440 should be aware that further or differing requirements may be needed for individual applications. This part of ISO 10440 is not intended to inhibit a vendor from offering, or the purchaser from accepting, alternative equipment or engineering solutions for the individual application. This may be particularly appropriate where there is innovative or developing technology. Where an alternative is offered, the vendor should identify any variations from this part of ISO 10440 and provide details.

A bullet (•) at the beginning of a subclause or paragraph indicates that either a decision is required or further information is to be provided by the purchaser. This information should be indicated on the datasheet(s), otherwise it should be stated in the quotation request or in the order.

In this part of ISO 10440, where practical, US Customary (USC) units are included in brackets for information. Dedicated datasheets for SI units and for USC units are provided in Annex A.

Documents
Document Sharing Hub
Full document details: DIN EN ISO 10440-1:2008-09

1 Scope

This part of ISO 10440 specifies requirements for dry and oil-flooded, helical-lobe rotary compressors (see Figure 1) used for vacuum or pressure or both in petroleum, petrochemical, and gas industry services. It is intended for compressors that are in special-purpose applications.

It is not applicable to general-purpose air compressors, liquid-ring compressors, or vane-type compressors.

NOTE Standard air compressors are covered in ISO 10440-2.

2 Normative references

The following referenced documents are indispensable for the application of this document. For dated references, only the edition cited applies. For undated references, the latest edition of the referenced document (including any amendments) applies.

ISO 7 (all parts), *Pipe threads where pressure-tight joints are made on the threads*

ISO 261, *ISO general purpose metric screw threads — General plan*

ISO 262, *ISO general-purpose metric screw threads — Selected sizes for screws, bolts and nuts*

ISO 281, *Rolling bearings — Dynamic load ratings and rating life*

ISO 724, *ISO general-purpose metric screw threads — Basic dimensions*

ISO 945 [1)], *Cast iron — Designation of microstructure of graphite*

ISO 965 (all parts), *ISO general-purpose metric screw threads — Tolerances*

ISO 1217, *Displacement compressors — Acceptance tests*

ISO 1328-1:1995, *Cylindrical gears — ISO system of accuracy — Part 1: Definitions and allowable values of deviations relevant to corresponding flanks of gear teeth*

ISO 1940-1:2003, *Mechanical vibration — Balance quality requirements for rotors in a constant (rigid) state — Part 1: Specification and verification of balance tolerances*

1) Under revision as ISO 945-1, *Designation of microstructure of cast irons — Part 1: Graphite classification by visual analysis.*

Documents
Document Sharing Hub
Full document details: DIN EN ISO 10440-1:2008-09

ISO 3448:1992 , *Industrial liquid lubricants — ISO viscosity classification*

ISO 3744, *Acoustics — Determination of sound power levels and sound energy levels of noise sources using sound pressure — Engineering method for an essentially free field over a reflecting plane*

ISO 5753:1991, *Rolling bearings — Radial internal clearance*

ISO 6708, *Pipework components — Definition and selection of DN (nominal size)*

ISO 7005-1, *Pipe flanges — Part 1: Steel flanges for industrial and general service piping systems*

ISO 7005-2, *Metallic flanges — Part 2: Cast iron flanges*

ISO 8821, *Mechanical vibration — Balancing — Shaft and fitment key convention*

ISO 10437, *Petroleum, petrochemical and natural gas industries — Steam turbines — Special-purpose applications*

ISO 10438 (all parts), *Petroleum, petrochemical and natural gas industries — Lubrication, shaft-sealing and control-oil systems and auxiliaries*

ISO 10441, *Petroleum, petrochemical and natural gas industries — Flexible couplings for mechanical power transmission — Special-purpose applications*

ISO 13691, *Petroleum and natural gas industries — High-speed special-purpose gear units*

ISO 13706, *Petroleum, petrochemical and natural gas industries — Air-cooled heat exchangers*

ISO 15649, *Petroleum and natural gas industries — Piping*

ISO 16812, *Petroleum, petrochemical and natural gas industries — Shell-and-tube heat exchangers*

IEC 60079 (all parts), *Electrical apparatus for explosive gas atmospheres*

ANSI/ABMA Standard 7, *Shaft and Housing Fits for Metric Radial Ball and Roller Bearings (Except Tapered Roller Bearings) Conforming to Basic Boundary Plan* [2)]

ANSI/ABMA Standard 20, *Radial Bearings of Ball, Cylindrical Roller and Spherical Roller Types — Metric Design*

API RP 500, *Recommended Practice for Classification of Locations for Electrical Installations at Petroleum Facilities Classified as Class 1, Division 1 and Division 2* [3)]

API 520 (all parts), *Sizing, Selection and Installation of Pressure-Relieving Devices in Refineries*

ANSI/API 526, *Flanged Steel Pressure Relief Valves*

ANSI/API 611, *General-Purpose Steam Turbines for Petroleum, Chemical and Gas Industry Services*

ANSI/API 613, *Special Purpose Gear Units for Petroleum, Chemical and Gas Industry Services*

ANSI/API 670, *Machinery Protection Systems*

ANSI/API 671, *Special Purpose Couplings for Petroleum, Chemical, and Gas Industry Services*

---

2) American Bearing Manufacturers Association, 2025 M Street, NW, Suite 800, Washington, DC 20036, USA.

3) American Petroleum Institute, 1220 L Street NW, Washington, DC 20005-4070, USA.

Documents
Document Sharing Hub
Full document details: DIN EN ISO 10440-1:2008-09

API 677, *General-Purpose Gear Units for Petroleum, Chemical and Gas Industry Services*

API RP 686:1996, *Machinery Installation and Installation Design*

ASME B1.1, *Unified Inch Screw Threads, UN and UNR Thread Form* [4)]

ASME B1.20.1-1983, *Pipe Threads, General Purpose (Inch)*

ASME B16.1, *Cast Iron Pipe Flanges and Flanged Fittings: Classes 25, 125, and 250*

ASME B16.5, *Pipe Flanges and Flanged Fittings*

ASME B16.11, *Forged Steel Fittings, Socket-Welding and Threaded*

ASME B16.42, *Ductile Iron Pipe Flanges and Flanged Fittings, Classes 150 and 300*

ASME B16.47, *Large Diameter Steel Flanges: NPS 26 Through NPS 60*

ASME B17.1, *Keys and Keyseats*

ASME Boiler and Pressure Vessel Code: Section V, *Nondestructive Examination*

ASME Boiler and Pressure Vessel Code: Section IX, *Welding and Brazing Qualifications*

ASTM A247, *Standard Test Method for Evaluating the Microstructure of Graphite in Iron Castings* [5)]

ASTM A278, *Standard Specification for Gray Iron Castings for Pressure-Containing Parts for Temperatures Up to 650 °F*

ASTM A320/A320M-05, *Standard Specification for Alloy-Steel and Stainless Steel Bolting Materials for Low-Temperature Service*

ASTM A395/A395M-99, *Standard Specification for Ferritic Ductile Iron Pressure-Retaining Castings for Use at Elevated Temperatures*

ASTM A536, *Standard Specification for Ductile Iron Castings*

ASTM E94, *Standard Guide for Radiographic Examination*

ASTM E709, *Standard Guide for Magnetic Particle Examination*

ASTM E1003, *Standard Test Method for Hydrostatic Leak Testing*

ANSI/AWS D1.1/D1.1M, *Structural Welding Code — Steel* [6)]

IEEE 841, *IEEE Standard for the Petroleum and Chemical Industry — Severe Duty Totally Enclosed Fan-Cooled (TEFC) Squirrel Cage Induction Motors — Up to and Including 500 HP (370 kW)* [7)]

NACE MR0103, *Materials Resistant to Sulfide Stress Cracking in Corrosive Petroleum Refining Environments* [8)]

---

4) American Society of Mechanical Engineers, Three Park Avenue, New York, NY 10016-5990, USA.

5) American Society for Testing and Materials, 100 Bar Harbor Drive, West Conshohocken, PA 19428-2959, USA.

6) American Welding Society, 550 North LeJeune Road, Miami, FL 33136, USA.

7) Institute of Electrical & Electronic Engineers, 445 Hoes Lane, Piscataway, NJ 08855-1331, USA.

8) NACE international, the corrosion society, 1440 South Creek Drive, Houston, Texas 77084-4906, USA.

Documents
Document Sharing Hub

Full document details: DIN EN ISO 10440-1:2008-09

NEMA 250, *Enclosures for Electrical Equipment (1 000 Volts Maximum)* [9)]

NEMA SM 23, *Steam Turbines for Mechanical Drive Service*

NFPA (Fire) 30, *Flammable and Combustible Liquids Code* [10)]

NFPA (Fire) 70-05, *2005 National Electrical Code*

TEMA Standard Class C [11)]

TEMA Standard Class R

3 Terms and definitions

For the purposes of this document, the following terms and definitions apply.

NOTE See Annex B for a guide to rotary-type positive-displacement compressor nomenclature.

3.1
alarm point
preset value of a measured parameter at which an alarm is actuated to warn of a condition that requires corrective action

3.2
anchor bolts
bolts used to attach the mounting plate to the support structure (concrete foundation or steel structure)

NOTE Refer to 3.14 for definition of hold-down bolts.

3.3
axially split
split with the principal joint parallel to the shaft centreline

3.4
baseplate
structure providing support and mounting surfaces for one or more pieces of equipment

3.5
certified point
point at which the vendor certifies that the performance is within the tolerances stated in the standard, usually the normal operating point

3.6
critical speed
shaft rotational speed at which the rotor-bearing support system is in a state of resonance

3.7
depressurization valve
blowdown valve
valve, external to the compressor, used to relieve the gas pressure within the compressor or compressor package to atmospheric or flare pressure

---

9) National Electrical Manufacturers Association, 1300 N. 17th Street, Suite 1847, Rosslyn, VA 22209, USA.

10) National Fire Protection Association, 1 Batterymarch Park, Quincy, MA 02269-9101, USA.

11) Tubular Exchanger Manufacturers Association, Inc., 25 North Broadway, Tarrytown, NY 10591, USA.

Documents
Document Sharing Hub
Full document details: DIN EN ISO 10440-1:2008-09

3.8
dry screw compressor
helical-lobe rotary compressor that uses no liquid for sealing the rotor clearances and driving the non-coupled rotor

NOTE 1 The rotor-to-rotor relationship is maintained by timing gears on each rotor and the non-coupled rotor is driven by the coupled rotor through the timing gears.

NOTE 2 No rotor-to-rotor contact occurs in the dry screw compressor.

3.9
fail-safe
system that causes the equipment to revert to a permanently safe condition (shutdown and/or depressurized) in the event of a component failure or failure of the energy supply to the system

3.10
flooded screw compressor
helical-lobe rotary compressor with a lubricant (compatible with the process gas) injected into the rotor area after the closed thread position of the rotor

NOTE This lubricant helps seal rotor clearances and establishes an oil film between the rotors. One rotor drives the other in the absence of a timing gear.

3.11
gas/oil separator
pressure-containing device, usually a vessel, used to separate entrained oil from the process gas

3.12
gauge board
bracket or plate used to support and display gauges, switches and other instruments

NOTE 1 A gauge board is open and not enclosed

NOTE 2 A gauge board is not a panel. A panel is an enclosure. Refer to 3.31 for the definition of a panel.

3.13
general-purpose application
application that is usually spared or is in non-critical service

3.14
hold-down bolts
mounting bolts
bolts holding the equipment to the mounting plate

3.15
hydrodynamic bearings
bearings that use the principles of hydrodynamic lubrication, where bearing surfaces are oriented such that relative motion forms an oil wedge or wedges to support the load without shaft-to-bearing contact

3.16
inlet volume flow
flow rate expressed in volume flow units at the conditions of pressure, temperature, compressibility and gas composition, including moisture content, at the compressor inlet flange

NOTE Inlet volume flow is a specific example of actual volume flow. Actual volume flow is the volume flow at any particular location such as interstage or compressor discharge. Actual volume flow should not be used interchangeably with inlet volume flow.

Documents
Document Sharing Hub
Full document details: DIN EN ISO 10440-1:2008-09

3.17
inlet separator
device, usually a filter or vessel, used to separate entrained solid and liquid contaminants from the process gas inlet steam

3.18
maximum allowable differential pressure
highest differential pressure that can be permitted in the compressor under the most severe operating conditions of minimum suction pressure and discharge pressure equal to the relief-valve setting

3.19
maximum allowable speed
highest rotational speed of the power-input rotor at which the manufacturer’s design permits continuous operation

3.20
maximum allowable temperature
maximum continuous temperature for which the manufacturer has designed the equipment (or any part to which the term is referred) when handling the specified fluid at the specified maximum operating pressure

3.21
maximum allowable working pressure
MAWP
maximum continuous pressure for which the manufacturer has designed the equipment (or any part to which the term is referred) when handling the specified fluid at the specified maximum operating temperature

3.22
maximum continuous speed
highest rotational speed of the power-input rotor at which the machine, as built and tested, is capable of continuous operation with the specified fluid at any of the specified operating conditions

3.23
maximum power
highest power the compressor and any shaft-driven appurtenances require for any of the specified operating conditions, including the effect of any equipment (e.g. pulsation suppression devices, process piping, intercoolers, after-coolers and separators) furnished by the compressor vendor

NOTE Deviations from the specified conditions, such as relief-valve set pressure, are excluded from maximum power.

3.24
maximum sealing pressure
highest pressure at which the seals are required to seal during any specified static or operating condition and during start-up and shutdown

3.25
minimum allowable speed
lowest rotational speed of the power-input rotor at which the manufacturer's design permits continuous operation

3.26
minimum allowable temperature
lowest temperature for which the manufacturer has designed the equipment or part thereof

3.27
mounting plate
device used to attach equipment to concrete foundations

NOTE A mounting plate can be a soleplate, a baseplate or a combination of both.

Documents
Document Sharing Hub
Full document details: DIN EN ISO 10440-1:2008-09

3.28
normal operating point
point at which usual operation is expected and optimum efficiency is desired, usually the certified point

3.29
observed inspection
observed test
inspection or test where the purchaser is notified of the timing of the inspection or test and the inspection or test is performed as scheduled if the purchaser or his representative is not present

NOTE Refer to 3.58 for the definition of a witnessed test.

3.30
owner
final recipient of the equipment who may delegate another agent as the purchaser of the equipment

3.31
panel
enclosure used to mount, display and protect gauges, switches and other instruments

NOTE A panel is not a gauge board. A panel is enclosed and not open. Refer to 3.12 for the definition of a gauge board.

3.32
pocket-passing frequency
frequency at which the gas is discharged from the rotor lobes into the discharge port

NOTE Pocket-passing frequency, expressed in hertz, is calculated by multiplying the rotor rotational speed, expressed in revolutions per minute, by the number of lobes on that rotor and dividing the product by 60.

3.33
pressure casing
composite of all stationary pressure-containing parts of the unit, including all nozzles and other attached parts

3.34
pressure design code
recognized pressure vessel standard specified or agreed by the purchaser

3.35
purchaser
agency that issues the order and specifications to the vendor

NOTE The purchaser can be the owner of the plant in which the equipment is to be installed or the owner's appointed agent.

3.36
radially split
split with the principal joint perpendicular to the shaft centreline

3.37
rated speed
100 % speed
highest rotational speed of the power input rotor required to meet any of the specified operating conditions

3.38
relief-valve set pressure
pressure at which a relief valve starts to lift

3.39
remote
located away from the equipment or the console, typically in a control house

Documents
Document Sharing Hub
Full document details: DIN EN ISO 10440-1:2008-09

3.40
required capacity
largest inlet volume required by the specified operating conditions

3.41
rotor
rotating male or female assembly, including rotor body, shaft and shrunk-on sleeves (if furnished)

NOTE See Figure 1.

3.42
rotor body
helical profile section on or integral with the shaft

3.43
rotor set
set consisting of both male and female rotors and, for dry screw compressors, including timing gears and thrust collars

3.44
seal buffer gas
clean gas supplied to the process (inboard) side of a seal

3.45
seal barrier gas
clean gas supplied to the area between the seals of a dual seal arrangement at a pressure higher than the process pressure

3.46
separation seal gas
supply of inert gas or air fed into the region between the seal and the shaft bearing or between the bearing housing and atmosphere

3.47
settle-out pressure
highest pressure which the compressor experiences when not running and after equilibrium has been reached

NOTE This can be a function of ambient temperature, relief-valve setting and piping-system volume.

3.48
shutdown point
preset value of a measured parameter at which automatic or manual shutdown of the system or equipment is required

3.49
slide valve
device integral to the compression chamber for varying the volumetric flow through a rotary screw compressor

NOTE See Figure B.2, item 8.

3.50
soleplate
plate grouted to the foundation, with a mounting surface for equipment or for a baseplate

3.51
special-purpose application
application for which the equipment is designed for uninterrupted continuous operation in critical service and for which there is usually no installed spare equipment

Documents
Document Sharing Hub
Full document details: DIN EN ISO 10440-1:2008-09

3.52
special tool
tool which is not a commercially available catalogue item

3.53
standby
normally idle or idling piece of equipment that is capable of immediate automatic or manual start-up and continuous operation

3.54
thermal relief valve
valve for relieving pressure caused by thermal expansion of liquid within a closed volume

3.55
trip speed
rotational speed of the power-input rotor at which the independent emergency overspeed system operates to shut down a prime mover

NOTE For the purposes of this part of ISO 10440, the trip speed of alternating-current electric motors, except variable-frequency drives, is the speed corresponding to the synchronous speed of the motor at maximum supply frequency.

3.56
unit responsibility
responsibility for coordinating the technical aspects of the equipment and all auxiliary systems included in the scope of the order, including responsibility for reviewing such factors as the power requirements, speed, rotation, general arrangement, couplings, dynamics, noise, lubrication, sealing system, material test reports, instrumentation, piping, conformance to specifications and testing of components

3.57
vendor
supplier
agency that supplies the equipment

NOTE The vendor can be the manufacturer of the equipment or the manufacturer's agent and normally is responsible for service support.

3.58
witnessed inspection
witnessed test
inspection or test where the purchaser is notified of the timing of the inspection or test and a hold is placed on the inspection or test until the purchaser or his representative is in attendance

4 General

4.1 Pressure design code

- The pressure design code shall be specified or agreed by the purchaser. Pressure components shall comply with the pressure design code and the supplemental requirements in this part of ISO 10440.

4.2 Unit responsibility

The vendor who has unit responsibility shall ensure that all subvendors comply with the requirements of this part of ISO 10440.

Documents
Document Sharing Hub
Full document details: DIN EN ISO 10440-1:2008-09

4.3 Units of measurement

- The purchaser shall specify whether data, drawings, hardware (including fasteners) and equipment supplied for this part of ISO 10440 shall use the SI or USC units.

NOTE Dedicated datasheets for SI units and for USC units are provided in Annex A.

4.4 Statutory requirements

The purchaser and the vendor shall mutually determine the measures to be taken to comply with any governmental codes, regulations, ordinances or rules that are applicable to the equipment.

5 Basic design

5.1 General

5.1.1 Typical helical-lobe compressor rotors are shown in Figure 1.

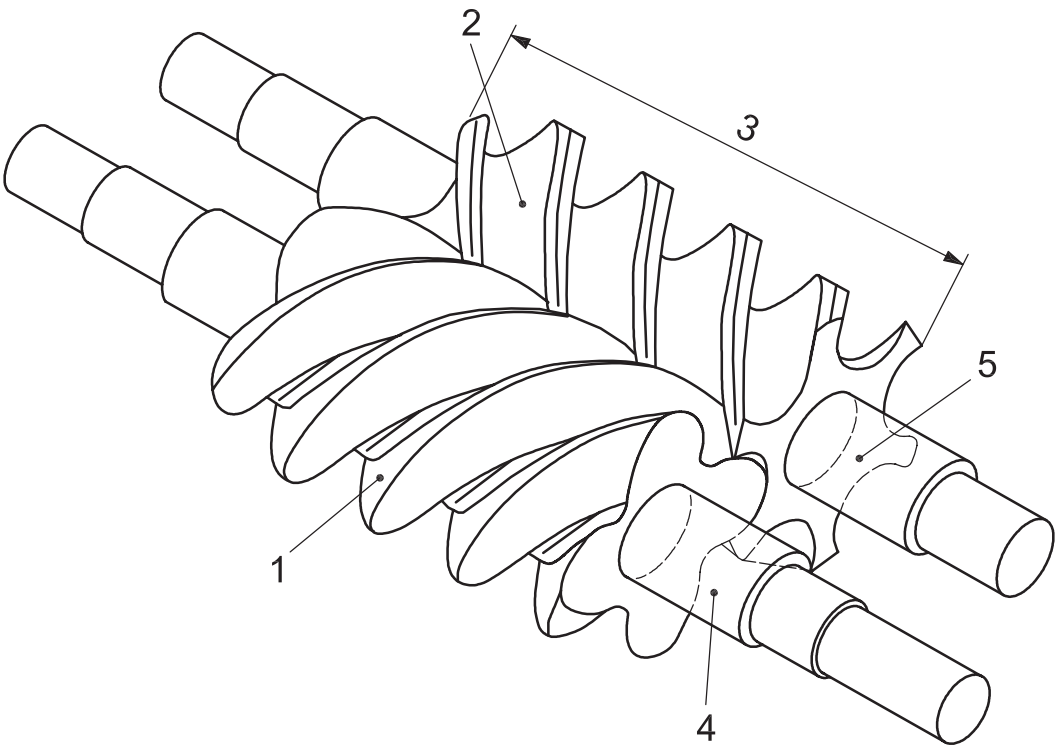

Key

1 male rotor
2 female rotor
3 rotor body
4 shaft extension – male rotor
5 shaft extension – female rotor

Figure 1 — Helical-lobe compressor rotors

The equipment (including auxiliaries) covered by this part of ISO 10440 shall be designed and constructed for a minimum service life of 20 years and at least 3 years of uninterrupted operation.

It is recognized that this is a design criterion.

Documents
Document Sharing Hub
Full document details: DIN EN ISO 10440-1:2008-09

The term “design” shall apply solely to parameters or features of the equipment supplied by the manufacturer. The term “design” should not be used in the purchaser's enquiry or specifications because it can create confusion in understanding the order.

5.1.2 The vendor shall assume unit responsibility for all equipment and all auxiliary systems included in the scope of the order.

- **5.1.3** The purchaser shall specify the equipment’s normal operating point.

- **5.1.4** The purchaser shall specify all other operating points, including start-up conditions, and shall indicate the certified operating point.

- **5.1.5** The purchaser shall specify the settle-out pressure. In the event that this pressure is not available at the time of inquiry, the normal discharge pressure shall be assumed.

NOTE If the actual settle-out pressure is higher than the assumed pressure, the seal system, drive-train components, relief valves and piping system can be adversely affected.

5.1.6 Equipment driven by induction motors shall be rated at the actual motor speed for the rated load condition.

5.1.7 Equipment shall be designed to run, without damage, at the relief-valve set pressure, specified maximum differential pressure and trip speed (see 5.1.12) simultaneously.

NOTE There can be insufficient driver power to operate under these conditions.

For machines operating with variable suction and discharge-pressure levels, maximum allowable temperature can occur before maximum allowable pressure or maximum allowable differential pressure occurs. In such cases, the manufacturer and the purchaser should jointly consider and apply suitable safeguarding controls to avoid any damage. Controls may include but are not limited to discharge temperature or differential pressure.

5.1.8 Unless otherwise specified, cooling-water systems shall be designed for the conditions given in Table 1:

Table 1 — Conditions for cooling-water systems

Water velocity over heat-exchange surfaces	1,5 m/s to 2,5 m/s	5 ft/s to 8 ft/s
Maximum allowable working pressure (MAWP)	> 700 kPa (7,0 bar)[a]	> 100 psi[a]
Test pressure (1,5 times MAWP)	> 1 050 kPa (10,5 bar)[a]	> 150 psi[a]
Maximum pressure drop	100 kPa (1 bar)	15 psi
Maximum inlet temperature	32 °C	90 °F
Maximum outlet temperature	50 °C	120 °F
Maximum temperature rise	17 K	30 R[b]
Minimum temperature rise	10 K	20 R[b]
Fouling factor on water side	0,35 m^2 K/kW	0,002 h·ft^2·R/Btu
Shell-corrosion allowance	3,0 mm	0,125 in

[a] Gauge pressure.

[b] Rankin is a deprecated unit.

The vendor shall notify the purchaser if the criteria for minimum temperature rise and velocity over heat-exchange surfaces result in a conflict. The criterion for velocity over heat-exchange surfaces is intended to minimize water-side fouling; the criterion for minimum temperature rise is intended to minimize the use of cooling water. If such a conflict exists, the purchaser shall approve the final selection.

Documents
Document Sharing Hub

Full document details: DIN EN ISO 10440-1:2008-09

5.1.9 The arrangement of the equipment, including piping and auxiliaries, shall be developed jointly by the purchaser and the vendor. The arrangement shall provide adequate clearance areas and safe access for operation and maintenance.

5.1.10 All equipment shall be designed to permit rapid and economical maintenance. Major parts, such as casing components and bearing housings, shall be designed and manufactured to ensure accurate alignment on reassembly. This can be accomplished by the use of shouldering, cylindrical dowels or keys.

5.1.11 The equipment's maximum continuous speed shall be not less than 105 % of the rated speed for variable-speed machines and shall be equal to the rated speed for constant-speed motor drives.

5.1.12 The equipment's trip speed shall not be less than the values in Table 2.

Table 2 — Driver trip speeds

Driver Type	Trip Speed (% of maximum continuous speed)
Steam turbine	
— Nema class A[a]	115
— Nema class B, C and D[a]	110
Gas turbine	105
Variable-speed motor	110
Constant-speed motor	100
Reciprocating engine	110

[a] Indicates governor class as specified in NEMA SM 23.

5.1.13 Spare and replacement parts for the machine and all furnished auxiliaries shall meet all the criteria of this part of ISO 10440.

5.1.14 Oil reservoirs and housings that enclose moving, lubricated parts, such as bearings, shaft seals, highly polished parts, instruments and control elements, shall be designed to minimize contamination by moisture, dust and other foreign matter during periods of operation and idleness.

5.1.15 The equipment (machine, driver and ancillary equipment) shall perform on the test stand and on their permanent foundation within the specified acceptance criteria. After installation, the performance of the combined units shall be the joint responsibility of the purchaser and the vendor who has unit responsibility. The performance of the machine shall also take into account the following.

a) The power at the certified point shall not exceed 104 % of the quoted value with no negative tolerance on required capacity.

b) The compressor vendor shall confirm that the unit is capable of continuous operation at any specified conditions.

● c) If specified, the compressor vendor shall confirm that the unit is capable of start-up at settle-out or elevated suction pressure.

● d) The purchaser shall specify gas composition(s). The purchaser may also specify relative molecular mass, ratio of specific heats (C_p/C_v) and compressibility factor (Z).

e) Unless otherwise specified, the vendor shall use the specified values of flow, the specified gas composition and the gas conditions to calculate relative molecular mass, ratio of specific heats (C_p/C_v) and compressibility factor (Z). The compressor vendor shall indicate his values on the datasheets with the proposal and use them to calculate performance data.

AVA Documents
Document Sharing Hub

Full document details: DIN EN ISO 10440-1:2008-09

- **5.1.16** If specified, the vendor shall review and comment on the purchaser's piping and foundation drawings.

- **5.1.17** If specified, in order to verify compliance with agreed criteria (e.g. API RP 686 or vendor's standard), the vendor's representative shall witness

  a) a check of the piping alignment performed by unfastening the major flanged connections of the equipment,

  b) the initial shaft alignment check,

  c) shaft alignment at operating temperature.

  NOTE Many factors can adversely affect site performance. These factors include such items as piping loads, alignment at operating conditions, supporting structure, handling during shipment and handling and assembly at the site.

  5.1.18 Motors, electrical components and electrical installations shall be suitable for the area classification (class, group and division or zone) specified by the purchaser and shall meet the requirements of the applicable sections of IEC 60079 (all parts) or NFPA 70-05, Articles 500, 501, 502 and 504, as well as any local codes specified and furnished on request of the purchaser.

- **5.1.19** Control of the sound pressure level (SPL) of all equipment furnished shall be a joint effort of the purchaser and the vendor having unit responsibility. The equipment furnished by the vendor shall conform to the maximum allowable sound pressure level specified. In order to determine compliance, the vendor shall provide both maximum sound pressure and sound power level data per octave band for the equipment.

  NOTE The sound power level of a source can be treated as a property of that source under a given set of operating conditions. The sound pressure level, however, varies depending on the environment in which the source is located as well as the distance from the source. Vendors routinely take exception to guaranteeing a purchaser's maximum allowable sound pressure level requirement due to the argument that the vendor has no control over the environment in which the equipment will be located. The vendor has control, however, over the sound power level of the equipment.

- **5.1.20** If specified, the vendor shall supply acoustical treatment. The type of treatment and safety requirements shall be agreed by the vendor and the purchaser.

  These compressors tend to be very noisy. The compressor can require an acoustical enclosure to achieve acceptable noise levels. Such factors as accessibility for operation and maintenance, purge requirements when handling flammable or toxic gas, noise levels within the enclosure, explosion-proof doors, and see-through window requirements for machine monitoring should be considered in the design and construction of acoustical enclosures.

  5.1.21 If equipment for liquid separation in the discharge gas stream is required, the specifications shall be developed jointly by the purchaser and the vendor.

  Liquid separation is always required for flooded screw compressors (see 5.10.3.1.1) and may be required for dry screw compressors if liquid injection is utilized.

- **5.1.22** The equipment, including all auxiliaries, shall be suitable for operation under the environmental conditions specified by the purchaser. This statement of conditions shall include whether the installation is indoors (heated or unheated) or outdoors (with or without a roof), maximum and minimum temperatures, unusual humidity and dusty or corrosive conditions.

- **5.1.23** The equipment, including all auxiliaries, shall be suitable for operation, using the utility stream conditions specified by the purchaser.

  5.1.24 Bolting shall be furnished as follows.

  a) The details of threading shall conform either to ISO 261, ISO 262, ISO 724 and ISO 965 (all parts) or to ASME B1.1.

  b) Adequate clearance shall be provided at all bolting locations to permit the use of socket or box wrenches.

Documents
Document Sharing Hub

Full document details: DIN EN ISO 10440-1:2008-09

c) Internal socket-type, slotted-nut or spanner-type bolting shall not be used unless specifically approved by the purchaser.

NOTE For limited space locations, an integrally flanged fastener can be required.

d) The manufacturer's marking shall be located on all fasteners 6 mm (0,25 in) and larger (excluding washers and headless set screws). For studs, the marking shall be on the nut end of the exposed stud end.

NOTE A set screw is a headless screw with an internal hex opening on one end.

● **5.1.25** The purchaser should indicate the presence of solid or liquid particles in the gas stream and their amount, size and composition.

5.2 Pressure casing

5.2.1 The pressure casing shall be designed in accordance with 5.2.2 or 5.2.3, as selected by the vendor and the casing-joint bolting shall be in accordance with 5.2.4. In addition, the pressure casing shall be designed to

a) operate without leakage or internal contact between rotating and stationary components while subject simultaneously to the MAWP (and corresponding temperature) and the worst-case combination of maximum allowable nozzle loads applied to all nozzles; and

b) withstand the hydrostatic test.

5.2.2 The allowable tensile stress used in the design of the pressure casing (excluding bolting) for any material shall not exceed 0,25 times the minimum ultimate tensile strength for the material at the maximum specified operating temperature. For cast materials, the allowable tensile stress shall be multiplied by the appropriate casting factor as shown in Table 3.

Table 3 — Casting factors

Type of NDE	Casting factor
Visual, magnetic particle and/or liquid penetrant	0,8
Spot radiography	0,9
Ultrasonic	0,9
Full radiography	1,0

5.2.3 Pressure-containing components may be designed with the aid of finite-element analysis, provided that the design limits comply with the pressure design code (e.g. Section VIII, division 2, of the ASME pressure vessel code) and with the maximum allowable stress intensity, Σ_{max}, expressed in kilopascals (pounds per square inch), as given in the modified Equation (1). Manufacturing data-report forms, third-party inspections and stamping as specified in the pressure design code are not required.

$$\Sigma_{max} = \Sigma_c \left(P_c / 150 \right) \tag{1}$$

where

Σ_c is the ASME Code stress intensity, expressed in kilopascals (pounds per square inch);

P_c is the ASME Code hydrotest pressure, expressed in percent of MAWP.

The manufacturer shall state the source of the material properties, such as ASTM, as well as the casting factors applied in his proposal.

Documents
Document Sharing Hub
Full document details: DIN EN ISO 10440-1:2008-09

5.2.4 For casing-joint bolting, the allowable tensile stress, as determined in 5.2.2, shall be used to determine the total bolting area based on hydrostatic load and gasket preload as applicable. The preload stress shall not exceed 0,75 times the bolting material minimum yield.

NOTE 1 In general, deflection is the determining consideration in the design of casings. Ultimate tensile or yield strength is seldom the limiting factor.

NOTE 2 Preloading the bolting is required to prevent unloading the bolted joint due to cyclic operation.

5.2.5 The maximum allowable working pressure of the casing shall be at least equal to the specified relief-valve set pressure. If a relief-valve set pressure is not specified by the purchaser, it shall be specified by the vendor. (See 5.1.7.)

5.2.6 Unless otherwise specified, for dry screw compressors, system pressure protection shall be furnished by the purchaser.

5.2.7 For flooded screw compressors, the gas system pressure protection shall be furnished by the vendor and sized in accordance with API 520 (including fire case) or other criteria as specified by the purchaser.

5.2.8 Casings shall be made of steel if

a) the rated discharge gauge pressure is over 2 750 kPa (27,5 bar; 400 psi),

b) the discharge temperature is over 260 °C (500 °F);

c) the gas is flammable or toxic.

NOTE In cases where cast-iron casings are acceptable, other considerations such as repair ability of the casing due to close rotor/casing clearances can be a consideration in specifying a steel casing.

5.2.9 Casings designed for more than one maximum allowable working pressure shall not be used. If a cooling jacket is utilized, this jacket shall have only external connections between the upper and lower housings.

5.2.10 The main joint of axially split casings shall use a metal-to-metal joint that is tightly maintained by bolting. The joint shall be sealed with a compound that is compatible with the fluids to be handled. Gaskets (including string-type) shall not be used. The main joints of radially split casings may incorporate a gasket. Such gaskets shall be fully confined.

5.2.11 Each axially split casing shall be sufficiently rigid to allow removal and replacement of its upper half without disturbing rotor-to-casing running clearances.

5.2.12 Casings and supports shall be designed to have sufficient strength and rigidity to limit any change in the relative position of the shaft ends at the coupling flange caused by the worst combination of allowable pressure, torque and piping forces and moments, to 50 µm (0,002 in).

5.2.13 Supports and alignment bolts shall be rigid enough to permit the machine to be moved by the use of its lateral and axial jackscrews.

5.2.14 Jackscrews, guide rods, casing-alignment dowels and/or other appropriate devices shall be provided to facilitate disassembly and reassembly. Guide rods shall be of sufficient length to prevent damage to the internals or casing studs by the casing during disassembly and reassembly. Lifting lugs or eyebolts shall be provided for lifting only the top half of the casing. Methods of lifting the assembled machine shall be specified by the vendor.

If jackscrews are used as a means of parting contacting faces, one of the faces shall be relieved (counterbored or recessed) to prevent a leaking joint or an improper fit caused by marring of the face.

Documents
Document Sharing Hub
Full document details: DIN EN ISO 10440-1:2008-09

- **5.2.15** If specified for dry screw compressor corrosion resistance, overlay cladding or plating shall be applied to the casing wall. This procedure can require an overbore of the casing during manufacture prior to final machining.

EXAMPLE For wet CO_2 service (carbonic acid), a stainless overlay 2,5 mm to 3,2 mm (0,100 in to 0,125 in) thick can be applied to the cast steel casing wall. The casing would be overbored to allow for a multilayer weld overlay lining consisting of a barrier pass of AISI Type 308/309 stainless steel followed by a cover pass of 308/316. The casing would be finish machined after the stainless overlay. The end wall could be lined similarly or have compatible stainless steel end plates provided.

The vendor shall include details of this procedure in the casing design proposal.

5.2.16 In addition to the requirements of 5.1.24, pressure-casing bolting shall be furnished as specified in 5.2.17 and 5.2.18.

5.2.17 Studs shall be supplied on the main joint of axially split casings and bolted end covers of radially split casings, unless cap screws are specifically approved by the purchaser.

Studs shall be used instead of cap screws on all other joints, except where hexagonal head cap screws are essential for assembly purposes and have been approved by the purchaser.

NOTE Flooded screw compressors are typically designed to use cap screws.

- **5.2.18** If specified, the main casing-joint studs and nuts shall be designed for the use of hydraulic bolt tensioning. Procedures and extent of special tools provided by the vendor shall be mutually agreed upon.

5.2.19 The use of threaded holes in pressure parts shall be minimized. To prevent leakage in pressure sections of casings, metal equal in thickness to at least half the nominal bolt diameter, in addition to the allowance for corrosion, shall be left around and below the bottom of drilled and threaded holes. The depth of the threaded holes shall be at least 1,5 times the stud diameter.

5.2.20 Mounting surfaces shall meet the following criteria.

a) They shall be machined to a finish of 6,3 µm (250 µin) *Ra* (arithmetic average roughness) or better.

b) To prevent a soft foot, they shall be in the same horizontal plane within 25 µm (0,001 in).

c) Each mounting surface shall be machined within a flatness of 13 µm/330 linear mm (0,000 5 in/linear ft) of mounting surface.

d) Different mounting planes shall be parallel to each other within 50 µm (0,002 in).

e) The upper machined or spot-faced surface shall be parallel to the mounting surface.

Hold-down bolt holes shall be drilled perpendicular to the mounting surface or surfaces and, to allow for equipment alignment, be 13 mm (0,5 in) larger in diameter than the hold-down bolt. If spot-faced, its diameter shall be three times that of the bolt hole.

5.2.21 The equipment feet shall be provided with vertical jackscrews and shall be drilled with pilot holes that are accessible for use in final doweling.

5.3 Casing connections

5.3.1 All openings or nozzles for piping connections on pressure casings shall be DN 20 (NPS $^3/_4$) or larger and shall be in accordance with ISO 6708. Sizes DN 32, DN 65, DN 90, DN 125, DN 175 and DN 225 (NPS 1-$^1/_4$, 2-$^1/_2$, 3-$^1/_2$, 5, 7, and 9) shall not be used.

5.3.2 All connections shall be flanged or machined and studded, except where threaded connections are permitted by 5.3.6. All connections shall be suitable for the maximum allowable working pressure of the casing.

AVA Documents
Document Sharing Hub
Full document details: DIN EN ISO 10440-1:2008-09

Main inlet and outlet process connections shall be oriented as specified. Flanged connections may be integral with the casing or, for casings of weldable material, may be formed by a socket-welded or butt-welded pipe nipple or transition piece, and shall terminate with a welding-neck or socket-weld flange.

5.3.3 Connections welded to the casing shall meet the material requirements of the casing, including impact values, rather than the requirements of the connected piping (see 5.11.4.5). All welding of connections shall be completed before the casing is hydrostatically tested (see 7.3.2).

5.3.4 A casing drain shall be provided.

5.3.5 Butt-welded connections, size DN 40 (NPS 1-$^1/_2$) and smaller, shall be reinforced by using forged welding inserts or gussets.

5.3.6 For connections other than main process connections, if flanged or machined and studded openings are impractical, threaded connections for pipe sizes not exceeding DN 40 (NPS 1-$^1/_2$) may be used with purchaser's approval as follows:

a) on non-weldable materials, such as cast iron;

b) if essential for maintenance (disassembly and assembly);

c) if space is limited.

5.3.7 Pipe nipples screwed or welded to the casing should not be more than 150 mm (6 in) long and shall be a minimum of schedule 160 seamless for sizes DN 25 (NPS 1) and smaller and a minimum of schedule 80 for DN 40 (NPS 1-$^1/_2$).

5.3.8 The pipe nipple shall be provided with a welding-neck or socket-weld flange.

5.3.9 The nipple and flange material shall meet the requirements of 5.3.3.

5.3.10 Threaded openings and bosses for pipe threads shall conform to ISO 7-1 and ISO 7-2 or ASME B1.20.1-1983.

5.3.11 Threaded openings not required to be connected to piping shall be plugged with solid, steel plugs in accordance with ASME B16.11. As a minimum, these plugs shall meet the material requirements of the pressure casing. Plugs that may later require removal shall be of a corrosion-resistant material. Plastic plugs are not permitted. A process-compatible thread lubricant of proper temperature specification shall be used on all threaded connections. Thread tape or thread sealant shall not be used.

5.3.12 Flanges shall conform to ISO 7005-1 or ISO 7005-2, or ASME B16.1, ASME B16.5 or ASME B16.42 or ASME B16.47, series A or B, as applicable, except as specified in 5.3.13 to 5.3.16.

5.3.13 Cast iron flanges shall be flat-faced and conform to the dimensional requirements of ISO 7005-2 or ASME B16.1 or ASME B16.42. Class 125 flanges shall have a minimum thickness equal to class 250 for sizes DN 200 (NPS 8) and smaller.

NOTE For general-purpose equipment, relaxation of the class 250 thickness requirement may be considered. Bolting dimensions are equivalent for class 125 and class 250 flanges. The added thickness is preferred for most machinery applications.

5.3.14 Flanges other than cast iron shall conform to the dimensional requirements of ISO 7005-1 or ASME B16.5 or ASME B16.47.

5.3.15 Flat face flanges with full raised face thickness are acceptable on casings of all materials. Flanges in all materials that are thicker or have a larger outside diameter than required by ISO or ASME are acceptable. Non-standard (oversized) flanges shall be completely dimensioned on the arrangement drawing.

5.3.16 Flanges shall be full-faced or spot-faced on the back and shall be designed for through bolting.

Documents
Document Sharing Hub

Full document details: DIN EN ISO 10440-1:2008-09

5.3.17 Machined and studded connections shall conform to the facing and drilling requirements of ISO 7005-1 or ISO 7005-2, or ASME B16.1, ASME B16.5, ASME B16.42 or ASME B16.47, series A or B. Studs and nuts shall be furnished installed, the first 1,5 threads at both ends of each stud shall be removed.

5.3.18 Machined and studded connections and flanges not in accordance with ISO 7005-1 or ISO 7005-2, or ASME B16.1, ASME B16.5, ASME B16.42 or ASME B16.47 require purchaser's approval. Unless otherwise specified, the vendor shall supply mating flanges, studs and nuts for these non-standard connections.

5.3.19 To minimize nozzle loading and facilitate installation of piping, machine flanges shall be parallel to the plane shown on the general arrangement drawing to within 0,5°. Studs or bolt holes shall straddle centrelines parallel to the main axes of the equipment.

5.3.20 All of the purchaser's connections shall be accessible for disassembly without requiring the machine, or any major part of the machine, to be moved.

5.4 External forces and moments

5.4.1 As a minimum, the compressor shall be designed to withstand external forces and moments on each nozzle as tabulated in Annex C. The vendor shall furnish the allowable forces and moments for each nozzle in tabular form.

Silencers can require additional support.

5.4.2 Casing and supports shall be designed to have sufficient strength and rigidity to limit distortion of coupling alignment due to pressure, torque and allowable forces and moments to 50 µm (0,002 in).

The use of expansion joints to limit piping forces and moments is not generally recommended. However, if used, care should be exercised in the selection and location of expansion joints to prevent possible early fatigue due to either pulsation or expansion strain or both. Expansion joints should not be used in flammable or toxic service unless specifically approved by the purchaser.

5.5 Rotating elements

5.5.1 Rotors

5.5.1.1 Rotor stiffness shall be adequate to prevent contact between the rotor bodies and the casing and between gear-timed rotor bodies at the most unfavourable specified conditions. Rotor bodies not integral with the shaft shall be permanently attached to the shaft to prevent relative motion under any condition. Structural welds on rotors shall be full-penetration continuous welds and shall be post-weld heat-treated, using qualified procedures and welders.

NOTE Only dry screw compressors are furnished with gear-timed rotor bodies.

5.5.1.2 Shafts shall be forged steel unless otherwise approved by the purchaser.

● **5.5.1.3** If specified or if vibration and/or axial-position probes are furnished, the rotor shaft-sensing areas (both radial vibration and axial position) that are observed by radial-vibration probes shall

a) be concentric with the bearing journals;

b) be free from stencil and scribe marks or any other surface discontinuity, such as an oil hole or a keyway, for a minimum of one probe-tip diameter on each side of the probe;

c) not be metallized, sleeved or plated;

d) have a final surface finish of a maximum of 0,8 µm (32 µin) Ra, preferably obtained by honing or burnishing;

Documents
Document Sharing Hub
Full document details: DIN EN ISO 10440-1:2008-09

e) be properly demagnetized to the levels specified in API 670 or otherwise treated so that the combined total electrical and mechanical runout does not exceed 25 % of the maximum allowed peak-to-peak vibration amplitude or the following value, whichever is greater:

1) for areas to be observed by radial-vibration probes, 6 µm (0,25 mil),

2) for areas to be observed by axial-position probes, 13 µm (0,5 mil).

5.5.1.4 Each rotor set shall be clearly marked with a unique identification number on each male and female rotor. This number shall be on the end of the shaft opposite the coupling or in an accessible area that is not prone to maintenance damage.

5.5.1.5 Shaft ends shall conform to the requirements of ISO 10441 or API 671.

5.5.1.6 All shaft keyways shall have fillet radii conforming to ASME B17.1.

5.5.2 Timing gears — Dry screw compressors

5.5.2.1 Timing gears shall be made of forged steel and shall be a minimum of ISO 1328-1:1995, accuracy grade 5. Timing gears shall be of the helical type; see Figure B.1. The ISO service factor shall be a minimum of 3,0.

NOTE For the purposes of this provision, AGMA 1328-1 is equivalent to ISO 1328-1.

5.5.2.2 The meshing relationship between gear-timed rotors shall be adjustable and the adjustment shall be arranged for positive locking. The adjustment and locking provisions shall be accessible with the rotors in their bearings. The gear enclosing chamber shall not be subject to contact with the gas.

5.5.2.3 Where timing gears have to be removed for seal replacement, it shall be possible to retime the rotors without further disassembly of radially split casings.

5.5.2.4 Timing gears for helical lobe compressors shall have the same helix hand (right or left) as the rotors so that axial position has minimal effect on timing.

5.5.2.5 Inspection ports or other means shall be provided on the housing covers, such that timing gears may be inspected without disassembly of the unit.

5.6 Shaft seals

5.6.1 General

5.6.1.1 Shaft seals shall be provided to restrict or prevent process gas leakage to the atmosphere.

5.6.1.2 Seal operation shall be suitable for specified variations in suction or discharge conditions that may prevail during start-up, shutdown or settling out and during any other special operation specified by the purchaser.

NOTE Whether the seals are exposed to suction or discharge conditions depends on seal location and on seal system configuration.

● **5.6.1.3** The purchaser may specify a sealing pressure provided it meets the requirements of 5.6.1.2 as a minimum.

5.6.1.4 The shaft seals and seal support system shall be designed to permit safe compressor pressurization with the seal system in operation prior to process start-up.

5.6.1.5 For low-temperature services, systems shall have provision for maintaining the seal fluid above its pour-point temperature at the inner-seal drain.

Documents
Document Sharing Hub
Full document details: DIN EN ISO 10440-1:2008-09

5.6.1.6 Shaft seals should be accessible for inspection and replacement without removing the top half of the casing of an axially split compressor or the end housings of a radially split unit.

NOTE It is recognized that casing disassembly can be required for access to seals on some designs.

- **5.6.1.7** Shaft seals may be one of, or a combination of, the types described in 5.6.3 and 5.6.4 as specified by the purchaser or other types as mutually agreed. Materials of component parts shall be suitable for the service.

5.6.1.8 If either the process or seal-support fluid are toxic or flammable, a separation seal is required in addition to the primary seal to prevent leakage to the atmosphere or to the bearing housing. This separation seal shall be capable of acting as a temporary, emergency backup seal should the primary seal fail during operation. The second seal in a tandem seal or a separate single or double seal may be used as the separation seal. Flammable liquids shall be as defined in NFPA 30. See Figures 2 and 3 for typical arrangements of separation seals.

5.6.1.9 Dry screw compressors with self-acting dry-gas seals and, unless otherwise agreed by the purchaser, other shaft seal types, shall have provisions for buffer gas injection to each seal.

5.6.2 Seal support systems

- **5.6.2.1** The purchaser should specify whether any of the following seal-support systems is required:

a) seal barrier gas;

b) seal buffer gas;

c) separation seal gas.

In addition, the vendor shall state whether seal fluid is required for any specified operating conditions.

Documents
Document Sharing Hub
Full document details: DIN EN ISO 10440-1:2008-09

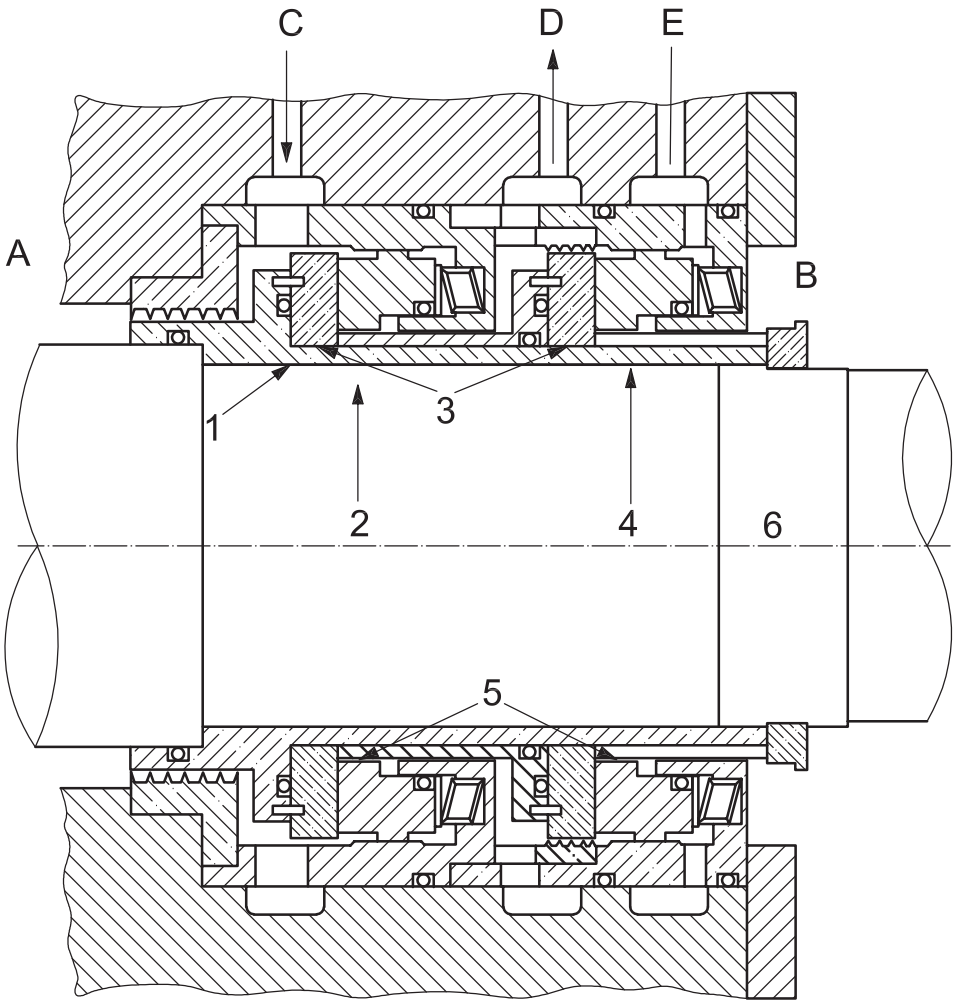

Key

A	gas side	1	shaft sleeve
B	atmosphere side	2	main primary seal
C	filtered seal gas inlet	3	rotating seat
D	gas leakage out	4	backup seal or isolating seal
E	isolation seal (inert buffer-injection gas)	5	stationary seat
		6	compressor rotor centreline

Figure 2 — Self-acting gas seal — Tandem arrangement

Documents
Document Sharing Hub
Full document details: DIN EN ISO 10440-1:2008-09

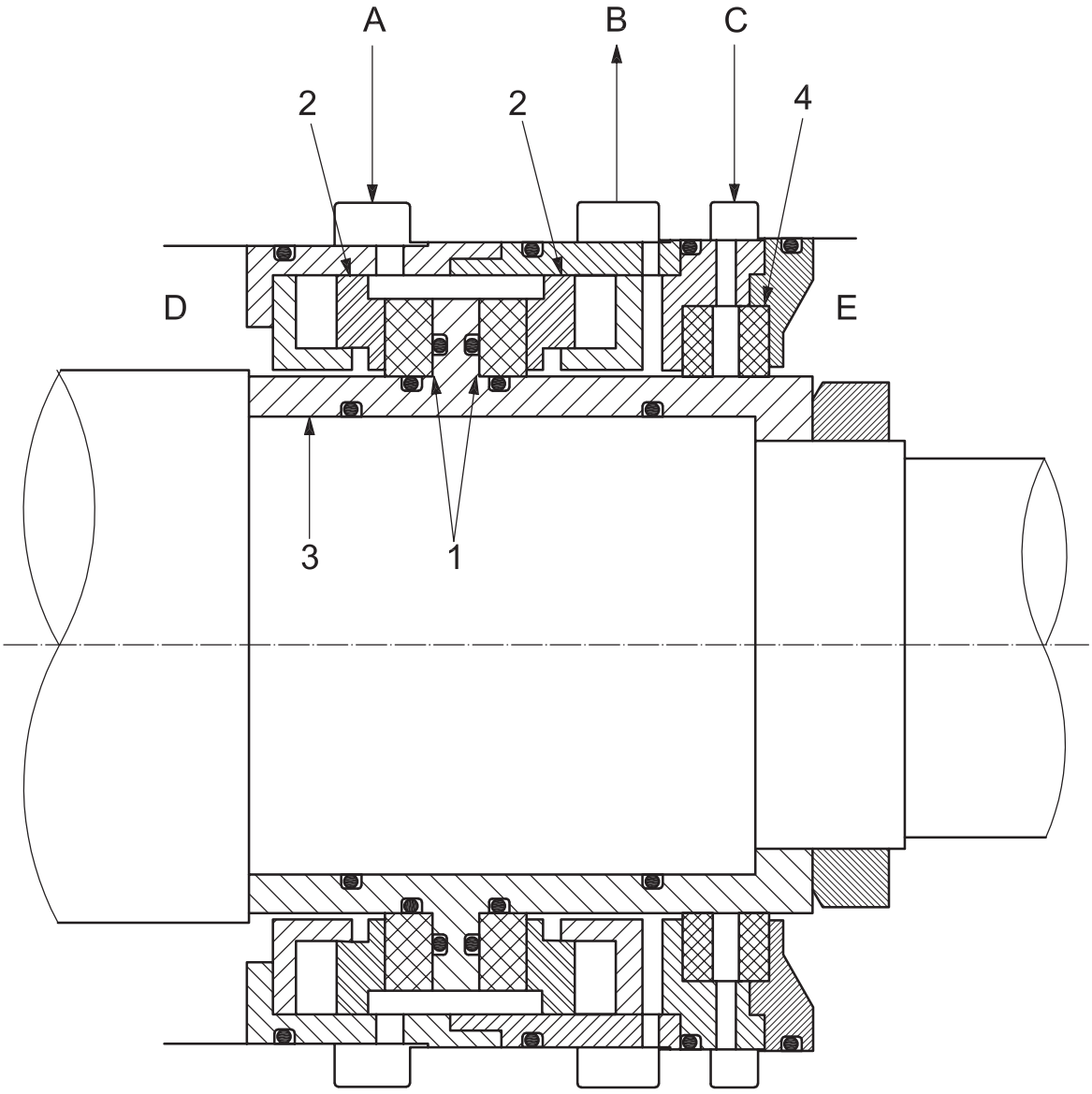

Key

A	filtered seal gas inlet	1	rotating seat
B	gas leakage out	2	stationary seat
C	barrier/isolation seal; clean, dry gas supply	3	rotor sleeve
D	gas side	4	barrier/isolation seal
E	atmosphere side		

Figure 3 — Self-acting gas seal — Double arrangement

5.6.2.2 If buffer-gas injection is provided, the vendor shall state the gas requirements including pressures, flow rates, dew points and filtration.

● **5.6.2.3** If specified, the vendor shall furnish the complete seal-support system, including schematic and bill of materials. The method of control, design, materials and scope of supply is mutually agreed by the purchaser and the vendor.

5.6.2.4 If a barrier or buffer gas is required, the gas shall be filtered and shall be dry and free of any contaminants that form residues. The seal-gas source may be taken from the compressor discharge or intermediate point. An alternative seal-gas source may be used and can be required during start-up or shutdown and for the separation seal.

Documents
Document Sharing Hub
Full document details: DIN EN ISO 10440-1:2008-09

5.6.2.5 Support systems for self-acting dry-gas seals shall be in accordance with ISO 10438-1 and ISO 10438-4.

NOTE For the purposes of this provision, API 614-99, Chapters 1 and 4, are equivalent to ISO 10438-1 and ISO 10438-4, respectively.

5.6.3 Shaft seals for dry screw compressors

5.6.3.1 Labyrinth type

The labyrinth seal (a typical seal is shown in Figure 4) may include restrictive-ring type in addition to the labyrinths if approved by the purchaser. Labyrinths may be stationary or rotating.

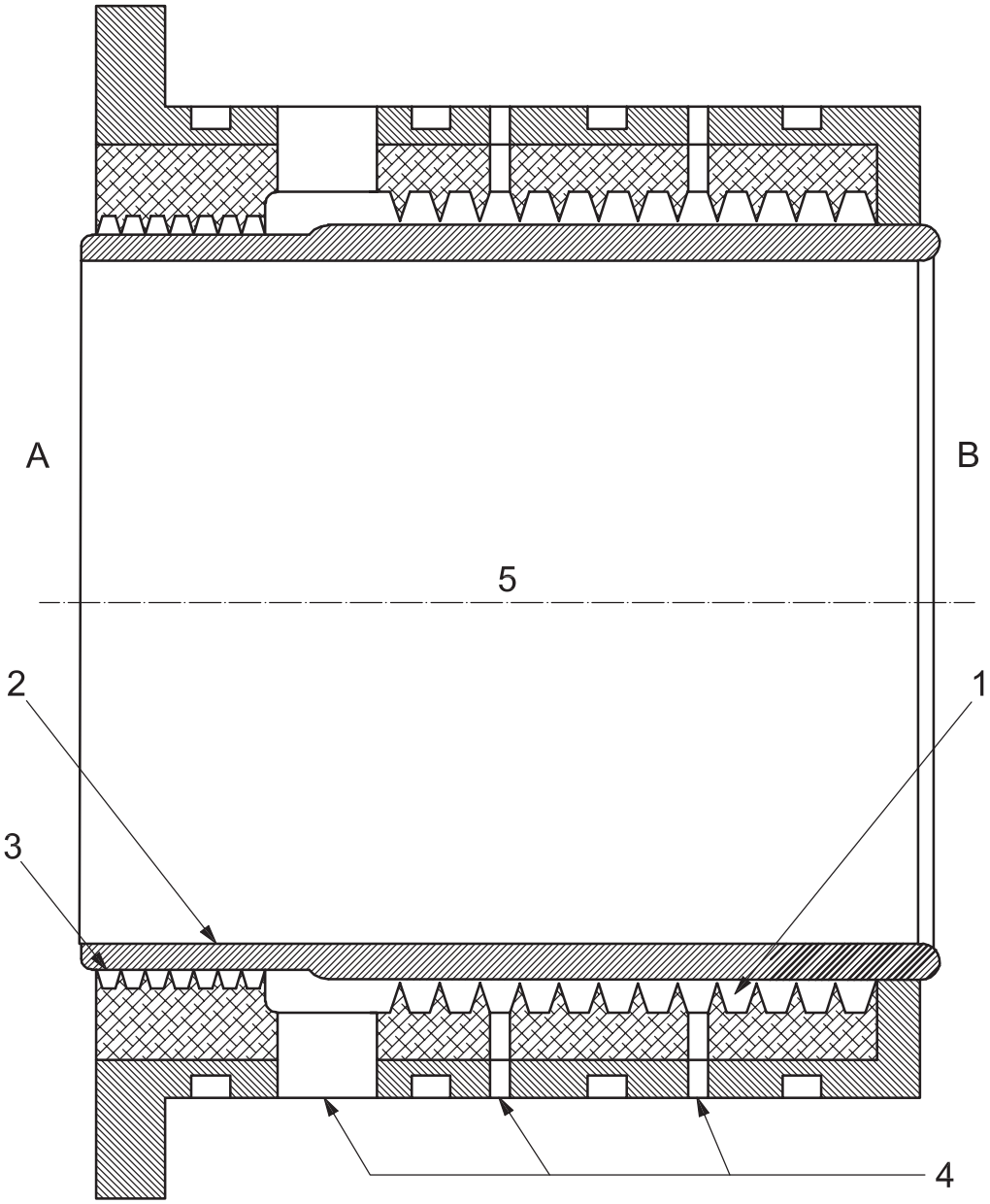

Key

A atmosphere side
B gas side

1 labyrinth
2 shaft sleeve
3 wind-back oil seal
4 ports for venting, purging or scavenging as required
5 compressor rotor centreline

Figure 4 — Labyrinth shaft seal

Documents
Document Sharing Hub
Full document details: DIN EN ISO 10440-1:2008-09

5.6.3.2 Restrictive-ring type

Restrictive-ring-type seals (a typical seal is shown in Figure 5) shall include rings of carbon or other suitable material mounted in retainers or spacers. The seals may be operated dry or with a sealing liquid.

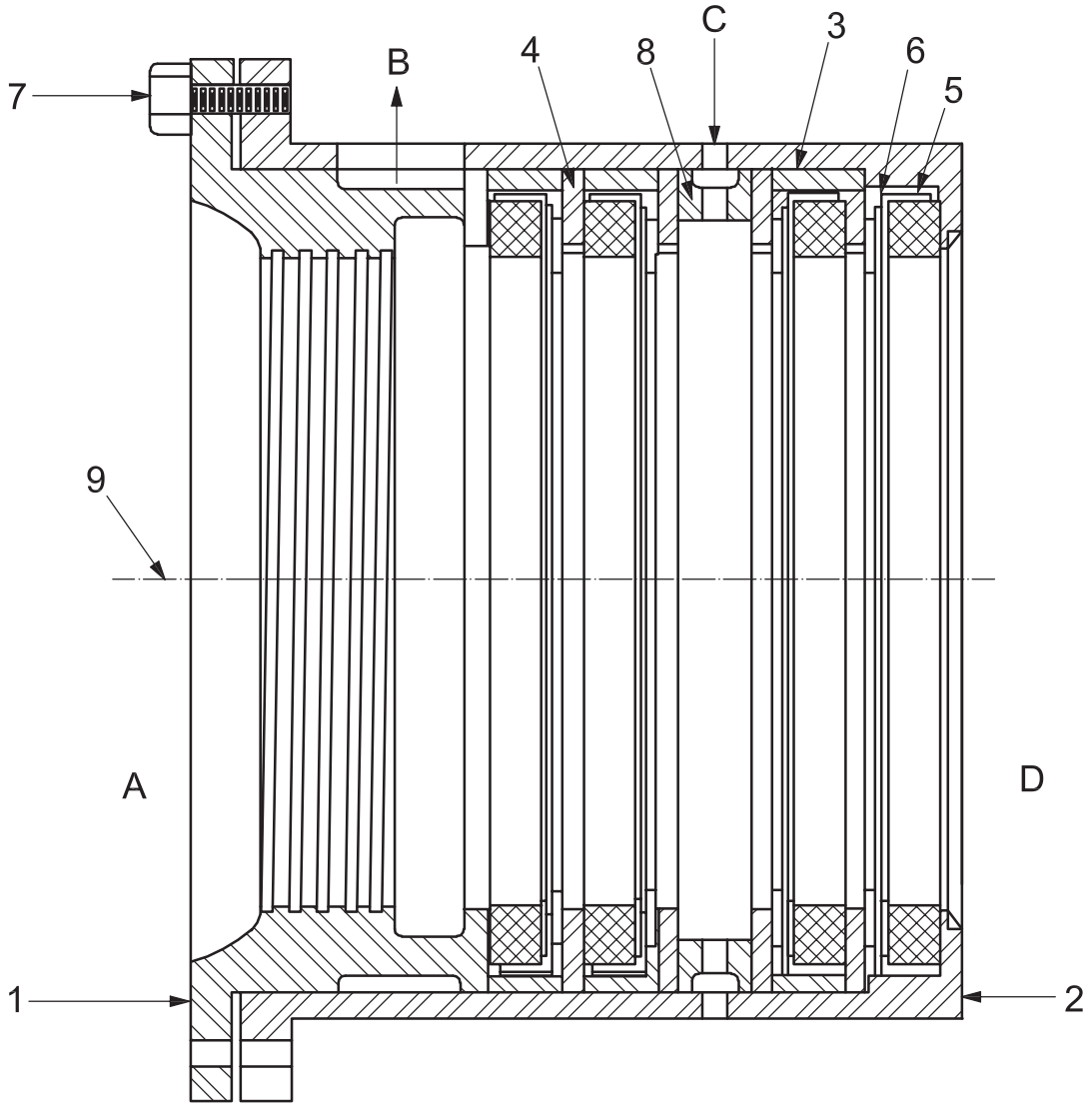

Key

A	atmosphere side	1	windback labyrinth
B	vent to atmosphere	2	seal cage
C	purge	3	spacer ring
D	gas side	4	spacer washer
		5	seal assembly
		6	washer spring
		7	capscrew
		8	spacer ring
		9	compressor rotor centreline

Figure 5 — Restrictive-ring-type seal (purged)

Documents
Document Sharing Hub
Full document details: DIN EN ISO 10440-1:2008-09

5.6.3.3 Mechanical-(contact-)type seal

5.6.3.3.1 Single mechanical-(contact-)type seals (a typical seal is shown in Figure 6) shall be provided with labyrinths and slingers or restrictive rings to minimize oil leakage to the atmosphere or into the compressor. Oil or other suitable liquid furnished under pressure to the rotating faces may be supplied from the lube-oil system or from an independent system in accordance with 5.10.

5.6.3.3.2 Mechanical-type seals shall incorporate a self-closing feature to prevent uncontrolled gas leakage from the compressor on shutdown and loss of seal oil pressure.

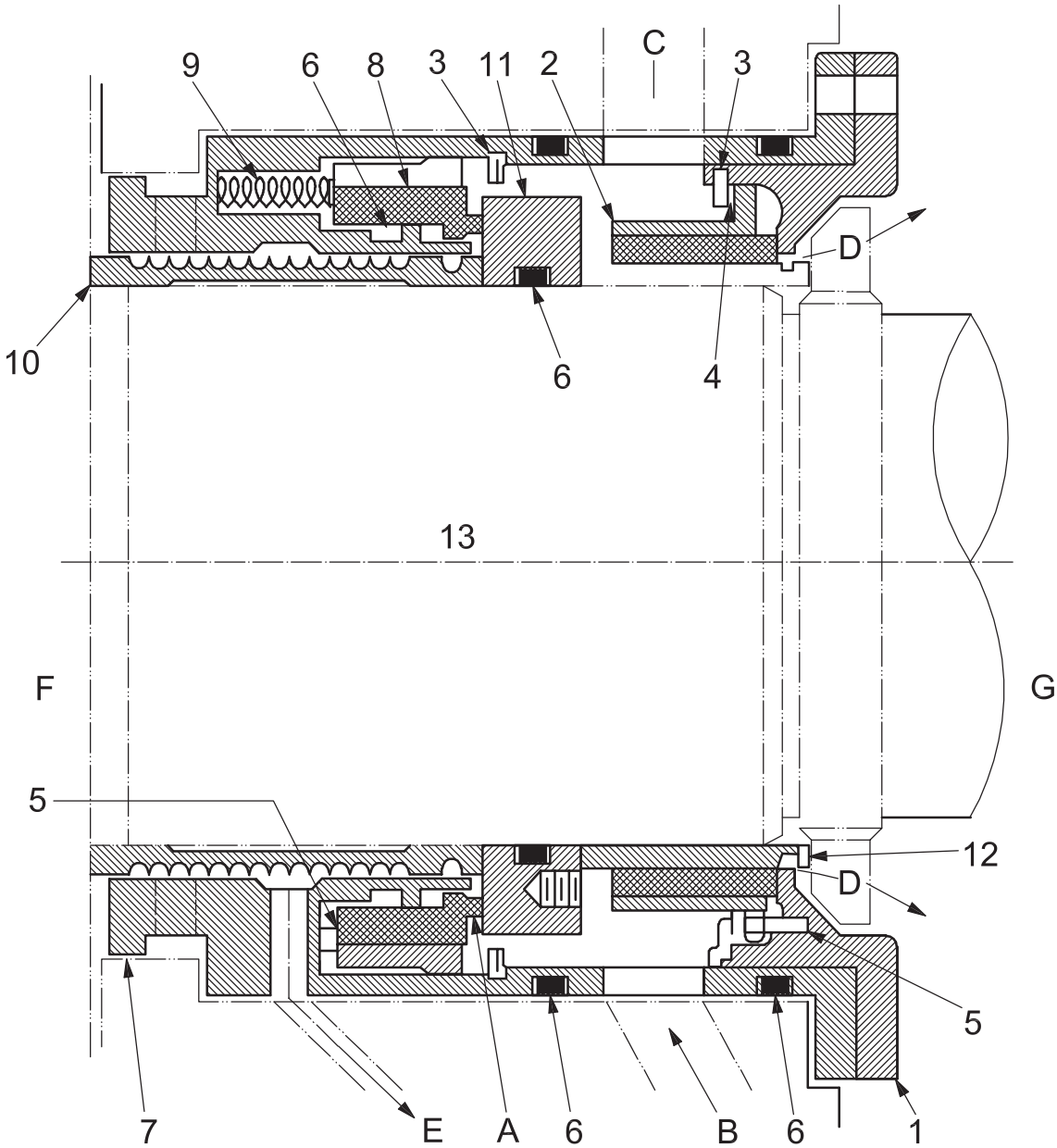

Key

A	seal face	1	bushing retainer	8	stationary seal ring
B	seal oil inlet	2	bushing seal ring	9	compression spring
C	seal oil return	3	snap ring	10	sleeve
D	seal oil return	4	wave washer spring	11	rotating face
E	leakage oil drain	5	rotation lock pin	12	runner
F	gas side	6	o-ring	13	compressor rotor centreline
G	atmosphere side	7	seal housing		

Figure 6 — Oil-cooled mechanical-(contact-)seal assembly

Documents
Document Sharing Hub
Full document details: DIN EN ISO 10440-1:2008-09

5.6.3.4 Self-acting dry-gas seal

- **5.6.3.4.1** Seal arrangement shall be single, double or tandem as specified.

5.6.3.4.2 A typical tandem arrangement is shown in Figure 2 and double arrangement with separation seal in Figure 3.

NOTE 1 Other variations are commonly used, depending on the particular application.

NOTE 2 There is the possibility of the seal being unidirectional in rotation.

NOTE 3 The seal leaks a small amount of seal gas.

5.6.4 Shaft seals for oil-flooded screw compressors

5.6.4.1 Mechanical-(contact-)type seals (a typical seal is shown in Figure 6) shall be provided with labyrinths, slingers or restrictive rings to minimize oil leakage to the atmosphere. Oil furnished under pressure to the rotating faces may be supplied from the lube-oil system in accordance with 5.10.

- **5.6.4.2** If specified that gas leakage to atmosphere is not permissible, oil-flooded screws require dual seal designs with an independent seal-fluid system. For refrigeration services, consideration shall also be given to introduction of inert gases into the system.

5.6.4.3 The arrangement of self-acting dry-gas seals shall be single, tandem or double.

5.7 Dynamics

5.7.1 General

5.7.1.1 In the design of rotor-bearing systems, consideration shall be given to all potential sources of periodic forcing phenomena (excitation) that shall include, but are not limited to, the following sources:

a) unbalance in the rotor system;

b) oil-film instabilities (whirl);

c) internal rubs;

d) pocket-passing frequencies;

e) gear-tooth meshing and side bands;

f) coupling misalignment;

g) loose rotor-system components;

h) hysteretic and friction whirl;

i) asynchronous whirl;

j) ball and race frequencies of rolling element bearings;

k) electrical line frequency.

NOTE 1 The frequency of a potential source of excitation can be less than, equal to or greater than the rotational speed of the rotor.

NOTE 2 When the frequency of a periodic forcing phenomenon (excitation) applied to a rotor-bearing-support system coincides with a natural frequency of that system, the system is in a state of resonance. A rotor-bearing-support system in resonance can have the magnitude of its normal vibration amplified. The magnitude of amplification and, in the case of critical speeds, the rate of change of the phase-angle with respect to speed are related to the amount of damping in the system.

Documents
Document Sharing Hub
Full document details: DIN EN ISO 10440-1:2008-09

5.7.1.2 If the rotor-amplification factor (see Figure 7) as measured at the shaft radial-vibration probes is greater than or equal to 2,5, the corresponding frequency is called a critical speed and the corresponding shaft rotational frequency is also called a critical speed. For the purposes of this part of ISO 10440, a critically damped system is one in which the amplification factor is less than 2,5.

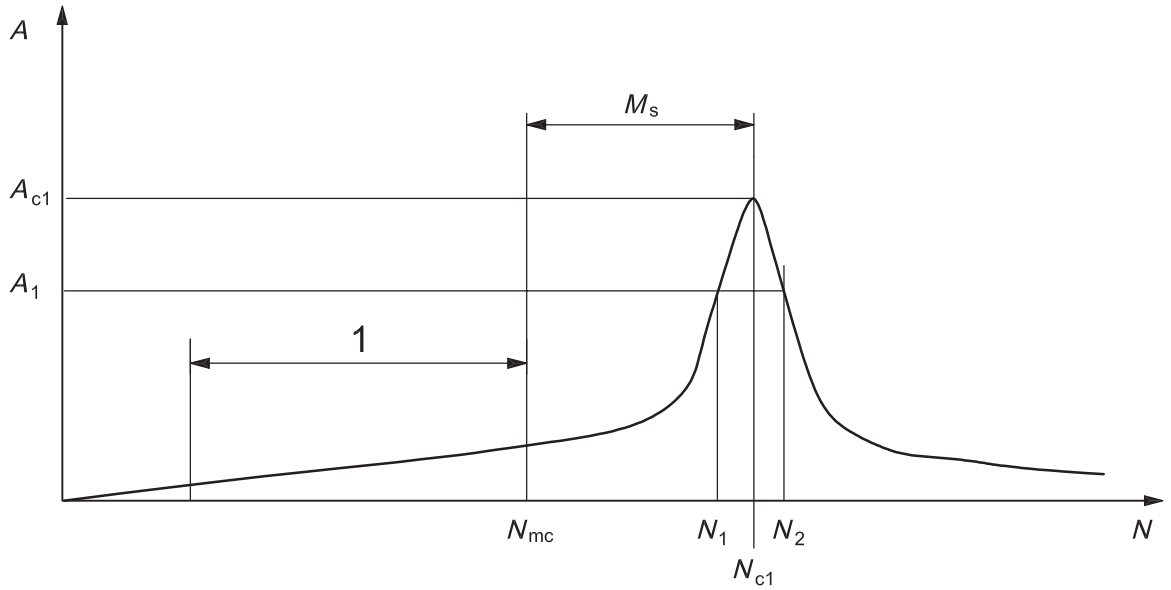

Key

1	operating speeds
A	vibration amplitude
A_{c1}	vibration amplitude at N_{c1}
A_1	0,707 of vibration amplitude at N_{c1}
M_s	separation margin
N	rotor speed
N_{c1}	rotor first critical speed, centre frequency
N_{mc}	maximum continuous speed, 105 % of rated speed
N_1	initial (lesser) speed at 0,707 × peak amplitude (critical)
N_2	final (greater) speed at 0,707 × peak amplitude (critical)
$N_2 - N_1$	peak width at the half-power point

NOTE The amplification factor, A_F, is equal to $N_{c1}/(N_2 - N_1)$.

Figure 7 — Rotor-response plot

5.7.1.3 Resonances of structural-support systems that are within the vendor's scope of supply and that affect the rotor vibration amplitude shall not occur within the specified operating speed range or the specified separation margin (see 5.7.1.4). The effective stiffness of the vendor's structural support shall be considered in the analysis of the dynamics of the rotor-bearing-support system.

NOTE Resonances of structural-support systems can adversely affect the rotor vibration amplitude.

5.7.1.4 Rotors shall be of a stiff-shaft construction with the first actual lateral critical speed at least 120 % of the maximum allowable speed. Unless otherwise specified, a lateral critical analysis is not required.

NOTE In most cases based on historical data, the vendor is able to demonstrate that the machine has a stiff-shaft design.

Documents
Document Sharing Hub
Full document details: DIN EN ISO 10440-1:2008-09

5.7.2 Torsional analysis

- **5.7.2.1** For motor-driven units and units including gears, units comprising three or more coupled machines (excluding any gears) or when specified, the vendor having unit responsibility shall ensure that a torsional vibration analysis of the complete coupled train is carried out and shall be responsible for directing any modifications necessary to meet the requirements of 5.7.2.2 through 5.7.2.5.

5.7.2.2 Excitation of torsional natural frequencies can come from many sources that might or might not be a function of running speed and should be considered in the analysis. These sources shall include, but are not limited to, the following:

a) gear characteristics such as unbalance, pitch line runout and cumulative pitch error;

b) cyclic process impulses;

c) torsional transients such as start-up of synchronous electric motors and generator phase-to-phase or phase-to-ground faults;

d) torsional excitation resulting from electric motors, reciprocating engines and rotary-type positive-displacement machines;

e) control loop resonances from hydraulic, electronic governors and variable frequency drives;

f) one- and two-times line frequency;

g) running speed or speeds of all rotating elements;

h) pocket passing frequency;

i) harmonic frequencies from variable frequency drives.

5.7.2.3 The torsional natural frequencies of the complete train shall be at least 10 % above or 10 % below any possible excitation frequency within the specified operating speed range (from minimum to maximum continuous speed).

5.7.2.4 Torsional criticals at two or more times running speeds should be avoided or, in systems in which corresponding excitation frequencies occur, shall be shown to have no adverse affect. In addition to multiples of running speeds, torsional excitations that are not a function of operating speeds or that are non-synchronous in nature shall be considered in the torsional analysis, if applicable, and shall be shown to have no adverse effect. Identification of these frequencies shall be the mutual responsibility of the purchaser and the vendor.

NOTE If a variable-speed driver is used, there is the possibility of not being able to avoid torsional criticals at multiples of all speeds in the operating range.

5.7.2.5 If torsional resonances are calculated to fall within the margin specified in 5.7.2.3 (and the purchaser and the vendor have agreed that all efforts to remove the critical from within the limiting frequency range have been exhausted), a stress analysis shall be performed to demonstrate that the resonances have no adverse effect on the complete train. The assumptions made in this analysis regarding the magnitude of excitation and the degree of damping shall be clearly stated. The acceptance criteria for this analysis shall be mutually agreed upon by the purchaser and the vendor.

5.7.2.6 In addition to the torsional analysis required in 5.7.2.2 to 5.7.2.5, the vendor shall perform a transient torsional vibration analysis for synchronous driven units and/or variable speed motors. The acceptance criteria for this analysis shall be mutually agreed upon by the purchaser and the vendor.

Documents
Document Sharing Hub
Full document details: DIN EN ISO 10440-1:2008-09

5.7.3 Vibration and balance

5.7.3.1 Major parts of the rotating element, such as the shaft and timing gears, shall be individually dynamically balanced to ISO 1940-1:2003, grade G2,5 or less. If a bare shaft with a single keyway is dynamically balanced, the keyway shall be filled with a fully crowned half key, in accordance with ISO 8821. Keyways 180° apart, but not in the same transverse plane, shall also be filled. The initial balance correction to the bare shaft shall be recorded. The components to be mounted on the shaft shall also be balanced in accordance with the "half-key convention" as described in ISO 8821.

NOTE For the purposes of this provision, ANSI S2.19 is equivalent to ISO 1940-1.

5.7.3.2 The rotors and timing gears shall be match-marked or keyed. This assembly shall be check-balanced (including keys). There shall be no exposed keys or unfilled keyways. The maximum unbalance shall be in accordance with ISO 1940-1:2003, grade G2,5.

NOTE For the purposes of this provision, ANSI S2.19 is equivalent to ISO 1940-1.

● **5.7.3.3** If specified, balance grade ISO 1940-1:2003, grade G1 shall be provided, or the maximum allowable residual unbalance, U_{max}, expressed in gram·millimetres (ounce·inches), for each plane (journal) shall be calculated as given in Equations (1) and (2):

In SI units $$U_{max} = 6\,350\ W/N \quad (1)$$

In USC units $$U_{max} = 4\ W/N \quad (2)$$

where

W is the component mass (for components), expressed in kilograms (pounds); or load per balancing machine journal (for rotors), expressed in kilograms (pounds);

N is the maximum continuous speed, expressed in revolutions per minute.

NOTE 1 For the purposes of this provision, ANSI S2.19 is equivalent to ISO 1940-1.

NOTE 2 For this equipment, the gas forces and variations in gas forces are orders of magnitude higher than the forces resulting from unbalance.

5.7.3.4 The calibration of the rotor-balancing machine shall be verified in accordance with the balancing machine manufacturer's procedure and frequency, or once a year as a minimum.

● **5.7.3.5** If specified, a residual unbalance check shall be performed in accordance with Annex D.

5.7.3.6 During the shop test of the machine, assembled with the balanced rotor operating at maximum continuous speed or at any other speed within the specified operating speed range, the casing vibration velocity shall be measured or, if specified for dry screw compressors, the shaft vibrations shall be measured in accordance with API 670. Unless otherwise specified, the limits in Table 4 shall apply to dry screw compressors and the limits in Table 5 shall apply to oil-flooded screw compressors.

5.7.3.7 If shaft vibration probes are supplied, electrical and mechanical runout shall be determined and recorded by rolling the rotor in the V-blocks at the journal centreline while measuring runout with a non-contacting vibration probe and a dial indicator at the centreline of the probe location and one probe-tip diameter to either side.

5.7.3.8 Accurate records of electrical and mechanical runout for the full 360° at each probe location shall be included in the mechanical test report.

5.7.3.9 If the vendor can demonstrate that electrical or mechanical runout is present, a maximum of 25 % of the test level calculated from Table 4 or 6,5 µm (0,25 mil), whichever is greater, may be vectorially subtracted from the vibration signal measured during the factory test.

Documents
Document Sharing Hub
Full document details: DIN EN ISO 10440-1:2008-09

Table 4 — Vibration limits for dry screw compressors

	Hydrodynamic bearings[a,b,c,d]	Rolling element bearings[a,b]
Measurement on bearing housing		
Vibration at any speed within operating range		
— Overall	V_u < 5,0 mm/s RMS (0,2 in/s RMS)	V_u <8,0 mm/s RMS (0,3 in/s RMS)
— Increase in allowable vibrations at speeds beyond operating speed but less than trip speed	50 %	50 %
Measurement on shaft adjacent to bearing		
Overall vibration at any speed within the operating speed range	"A" shall be the lesser value of — $\sqrt{(1{,}03 \times 10^7/n)}$ µm $\left(\sqrt{(16\ 000/n)}\ \text{mils}\right)$ — or 50 % bearing clearance	
Increase in allowable vibration at speeds beyond operating speed but less than trip speed	50 %	

a V_u is the unfiltered velocity.

b RMS is the root mean square.

c A is the unfiltered peak-to-peak amplitude of vibration.

d n is the max. continuous speed in revolutions per minute (r/min).

Table 5 — Vibration limits for oil-flooded screw compressors

Measurement on bearing housing	Hydrodynamic bearings[a,b]	Rolling element bearings[a,b]
Vibration at any speed within operating range		
— Overall	V_u < 8,0 mm/s RMS (0,3 in/s RMS)	V_u < 8,0 mm/s RMS (0,3 in/s RMS)
— Increase in allowable vibrations at speeds beyond operating speed but less than trip speed	50 %	50 %

NOTE The pulsating oil flow through the oil-flooded screw compressor causes increased vibration. Oil-flooded screw compressors with hydrodynamic bearings typically operate with higher compression ratios and/or higher discharge pressures than machines with rolling element bearings.

a V_u is the unfiltered velocity.

b RMS is the root mean square.

Documents
Document Sharing Hub
Full document details: DIN EN ISO 10440-1:2008-09

5.8 Bearings

5.8.1 General

5.8.1.1 Bearings shall be one of the following arrangements: rolling element radial and thrust, hydrodynamic radial and rolling element thrust or hydrodynamic radial and thrust. Each shaft shall be supported by two radial bearings and one double-acting axial (thrust) bearing that might or might not be combined with one of the radial bearings. Unless otherwise specified, the bearing type and arrangement shall be selected in accordance with the limitations in Tables 6 and 7.

Table 6 — Bearing selection

Condition	Bearing type and arrangement
Radial and thrust bearing speed and life within limits for rolling element bearings and Machine energy density below limit	Rolling element radial and thrust
Radial bearing speed or life outside limits for rolling element bearings and Thrust bearing speed and life within limits for rolling element bearings and Machine energy density below limit	Hydrodynamic radial and rolling element thrust or Hydrodynamic radial and thrust
Radial and thrust bearing speed or life outside limits for rolling element bearings or Machine energy density above limit	Hydrodynamic radial and thrust

Documents
Document Sharing Hub
Full document details: DIN EN ISO 10440-1:2008-09

Table 7 — Bearing limits

Limiting Factor	Conditions
Rolling element bearing speed	Factor [a] $N{\cdot}d_m$ shall not exceed the following values for pressurized oil-lubricated bearings[b]: Bearing type — $N{\cdot}d_m$ Radial: single-row ball bearings, cylindrical-roller bearings — 500 000 Radial: tapered roller bearings, spherical roller bearings — 350 000 Thrust: single-row ball bearings — 350 000 Thrust: double-row angular-contact — 300 000 tapered roller bearings — 250 000
Rolling element bearing life	Basic rating, L_{10}, in accordance with ISO 281[c] of at least 50 000 h with continuous operation at rated conditions, and at least 32 000 h at maximum radial and axial loads and rated speed. NOTE The calculated bearing life is based on lubrication with clean, filtered oil. In oil-flooded screw compressors, aggressive and/or contaminated process gases can significantly shorten the actual bearing life.
Energy density	When the product of machine-rated power, expressed in kW (hp), and rated speed, expressed in rev/min, is $4{,}0 \times 10^6$ kW/min ($5{,}4 \times 10^6$ hp/min) or greater, hydrodynamic radial and thrust bearings are required.

[a] N is the rotative speed, expressed in revolutions per minute;
d_m is the mean bearing diameter, $(d + D)/2$, expressed in millimetres;
D is the bearing outer diameter, expressed in millimetres;
d is the bearing inner diameter, expressed in millimetres.

[b] For flooded screw compressors with special directed (jet) lubrication arrangement, the acceptable $N{\cdot}d_m$ factor for radial and thrust ball bearings may be increased according to the bearing manufacturer's recommendation.

[c] For the purpose of this provision, ABMA Standard 9 is equivalent to ISO 281.

5.8.1.2 Thrust bearings shall be sized for continuous operation through the full operating range including the most adverse specified operating conditions. Calculation of the thrust load shall include, but shall not be limited to, the following factors:

a) step thrust from all diameter changes;

b) stage reaction and stage differential pressure;

c) variations in pressure at all inlet and outlet nozzles;

d) external loads from the driver or driven equipment, as described in 5.8.1.3 and 5.8.1.4;

e) highest transient load.

5.8.1.3 Thrust forces from metallic flexible element couplings shall be calculated on the basis of the maximum allowable deflection permitted by the coupling manufacturer.

5.8.1.4 If two or more rotor thrust forces are to be carried by one thrust bearing (such as in a gear box), the resultant of the forces shall be used, provided the directions of the forces make them numerically additive.

AVA Documents
Document Sharing Hub

Full document details: DIN EN ISO 10440-1:2008-09

If the forces are, by design, in opposite directions, they may be subtracted from each other (e.g. gear forces vs. clearly defined gas forces).

● **5.8.1.5** If specified, for dry screw compressors, hydrodynamic thrust and radial bearings shall be fitted with bearing-metal temperature sensors installed in accordance with API 670. See Figures B.5 and B.6.

NOTE For flooded screw compressors, bearing-temperature measurement is often not practical.

5.8.2 Rolling element bearings

5.8.2.1 Rolling element bearings shall be located, retained and mounted in accordance with the following.

a) Bearings shall be located on the shaft using shoulders, collars or other positive locating devices; snap rings and spring-type washers shall not be used.

b) Bearings shall be retained on the shaft with an interference fit and fitted into the housing with a diametrical clearance, both in accordance with the recommendations of ABMA Standard 7.

c) Bearings shall be mounted directly on the shaft; bearing carriers shall not be used.

5.8.2.2 Single-row, deep-groove ball bearings shall have greater than normal internal clearance according to ISO 5753:1991, group 3 or ABMA Symbol 3, as defined in ABMA Standard 20.

5.8.2.3 Rolling element bearings shall be selected in accordance with the following.

a) A rolling element thrust bearing may be a single-row, deep-groove ball bearing provided the combined axial thrust and radial load is within the capability of such a bearing and the requirements of 5.8.1 are satisfied.

b) If the loads exceed the capability of a single-row, deep-groove bearing, a matched pair of single-row, angular-contact-type bearings shall be used.

c) Unless otherwise specified, bearings shall be mounted in a paired bi-directional arrangement. The need for bearing clearance or preload shall be determined by the vendor to suit the application and meet the bearing life requirements; see Table 7.

d) Rolling element thrust bearings shall be secured to the shaft with a nut and an appropriate locking method.

e) Four-point contact (split race) ball bearings shall not be used for radial loads. Bearings with filling slots shall not be used.

5.8.3 Hydrodynamic bearings

5.8.3.1 Hydrodynamic radial bearings shall be in accordance with 5.8.3.1.1 to 5.8.3.1.3.

5.8.3.1.1 Hydrodynamic radial bearings shall be precision-bored and of the sleeve or pad type, with steel-backed, babbitted, replaceable liners, pads or shells. The bearings shall be equipped with anti-rotation pins and shall be positively secured in the axial direction.

5.8.3.1.2 The bearing design shall suppress hydrodynamic instabilities and provide sufficient damping over the entire range of allowable bearing clearances to limit rotor vibration to the maximum specified amplitudes (see Tables 4 and 5) while the unit is operating loaded or unloaded at specified operating speeds including operation at any resonant condition.

5.8.3.1.3 Bearings shall be designed to prevent incorrect positioning.

5.8.3.2 Hydrodynamic thrust bearings shall be in accordance with 5.8.3.2.1 to 5.8.3.2.4.

Documents
Document Sharing Hub

Full document details: DIN EN ISO 10440-1:2008-09

5.8.3.2.1 The active sides of hydrodynamic thrust bearings shall be of the babbitted, multiple-segment, self-leveling, tilting-pad type or other types approved by the purchaser, sized for continuous operation under all specified operating conditions (including the maximum allowable differential pressure). The inactive-side thrust pads or segments shall be babbitted and arranged for positive lubrication.

5.8.3.2.2 Unless otherwise specified, replaceable thrust collars shall be furnished and shall be positively locked to the shaft to prevent fretting.

5.8.3.2.3 Thrust bearings shall be arranged to allow axial positioning of each rotor relative to the casing and setting of the bearings' clearance or preload.

5.8.3.2.4 Hydrodynamic thrust bearings shall be selected at no more than 50 % of the bearing manufacturer's ultimate load rating. The ultimate load rating is the load that produces the minimum acceptable oil-film thickness without inducing failure during continuous service or the load that does not exceed the creep-initiation or yield strength of the babbitt at the location of maximum temperature on the pad, whichever load is less. In sizing thrust bearings, consideration shall be given to the following for each specific application:

a) shaft speed;

b) temperature of the bearing babbitt;

c) deflection of the bearing pad;

d) minimum oil-film thickness;

e) feed rate, viscosity and supply temperature of the oil;

f) design configuration of the bearing;

g) babbitt alloy;

h) turbulence of the oil film.

The sizing of hydrodynamic thrust bearings shall be reviewed and approved by the purchaser.

5.9 Bearing housings

5.9.1 Bearing housings for pressure-lubricated hydrodynamic bearings shall be arranged to minimize foaming. The drain system shall be adequate to maintain the oil foam level below shaft end seals. Oil outlets from thrust bearings shall be tangential and in the upper half of the control ring or, if control rings are not used, in the thrust bearing cartridge.

5.9.2 Oil connections on bearing housings shall be in accordance with 5.3.

5.9.3 The rise in oil temperature through the bearing and housings shall not exceed 30 K (50 °F) under the most adverse specified operating conditions. The bearing outlet oil temperature shall not exceed 80 °C (180 °F). If the inlet oil temperature exceeds 50 °C (120 °F), special consideration shall be given to bearing design, oil flow and allowable temperature rise. In this case, outlet oil temperature may exceed 80 °C (180 °F).

NOTE Oil-flooded screw compressors can require a relatively high oil inlet temperature to prevent formation of condensate from the process gas. Failure to maintain an adequate oil temperature can result in emulsified or contaminated lubricating oil.

5.9.4 If water cooling is required, water jackets shall have only external connections between upper and lower housing jackets and shall have neither gasketed nor threaded connection joints that can allow water to leak into the oil reservoir. If cooling coils (including fittings) are used, they shall be of non-ferrous, metallic material and shall have no internal pressure joints. Tubing or piping shall have a minimum wall thickness of 1,0 mm (0,040 in) and shall have an outside diameter of at least 12 mm (0,50 in).

Documents
Document Sharing Hub
Full document details: DIN EN ISO 10440-1:2008-09

5.9.5 Compressors shall have bearing-housing-shaft seals and deflectors where the shaft passes through the housing; lip-type seals shall not be used. The seals and deflectors shall be made of non-sparking materials. The design of the seals shall effectively retain oil in the housing and prevent entry of foreign material into the housing.

● **5.9.6** If specified, for dry screw compressors, provision shall be made for mounting two radial-vibration probes on each bearing, one axial position probe on each rotor and a one-event-per-revolution probe; see Figures B.3 and B.4. The probe installation shall be as specified in API 670.

NOTE Some smaller machines cannot accommodate proximity-type probes due to space limitations.

● **5.9.7** If specified, bearing housings shall be prepared for permanently mounting seismic vibration transducers in accordance with API 670. When metric fasteners are supplied, the threads shall be M8.

● **5.9.8** If specified, a flat surface of an agreed size and location shall be provided for mounting of magnetic-based seismic vibration measuring equipment.

5.10 Lube-oil and seal-oil systems

5.10.1 General

5.10.1.1 Unless otherwise specified, a pressurized oil system shall be furnished to supply oil at a suitable pressure or pressures, as applicable, to the following:

a) bearings of the driver and of the driven equipment (including any gear);

b) any governor and control-oil system;

c) seal-oil system, if combined with the lube-oil system;

d) rotor internal cooling;

e) rotors of oil-flooded compressors including slide valve.

● **5.10.1.2** Relief valves whose sole purpose is to protect blocked-in equipment (e.g. coolers or filters) from thermal expansion shall be supplied if specified by the purchaser. The purchaser shall mark THERM outside the relief-valve symbol on the schematic if the relief valve is for protection from thermal expansion only.

5.10.2 Dry screw compressors

5.10.2.1 If oil is supplied from a common system to two or more components of a machinery train (e.g. a compressor, a gear and a motor), the vendor having unit responsibility shall ensure compatibility of type, grade, pressure and temperature of oil for all equipment served by the common system. Compatibility of lube-oil requirements shall be mutually agreed among the user and all vendors supplying equipment served by the common system. In some cases, there can be significant differences in individual component needs.

NOTE The usual lubricant employed in a common oil system is a mineral oil that corresponds to ISO 3448:1992 Grade 32 or Grade 46.

5.10.2.2 Unless otherwise specified, bearings and bearing housings shall be arranged for oil lubrication using a mineral oil in accordance with ISO 3448.

5.10.2.3 Unless otherwise specified, pressurized oil systems for dry screw compressors shall conform to the requirements of ISO 10438-1 and ISO 10438-2.

NOTE For the purposes of this provision, API 614-99, Chapters 1 and 2, are equivalent to ISO 10438-1 and ISO 10438-2, respectively.

Documents
Document Sharing Hub

Full document details: DIN EN ISO 10440-1:2008-09

- **5.10.2.4** If specified, an oil reservoir integral to the base frame shall be provided in accordance with the requirements of ISO 10438-3.

NOTE For the purposes of this provision, API 614-99, Chapter 3, is equivalent to ISO 10438-3.

- **5.10.2.5** If specified, a full-capacity, shaft-driven oil pump shall be provided in accordance with the requirements of ISO 10438 (all parts).

NOTE 1 This pump is typically driven by the low-speed shaft of the gear box.

NOTE 2 For the purposes of this provision, API 614 is equivalent to ISO 10438 (all parts).

5.10.3 Flooded screw compressors

5.10.3.1 General

5.10.3.1.1 Flooded screw compressors shall utilize a pressurized reservoir and separation vessels.

Oil systems for flooded screw compressors are designed with consideration of the following features.

a) Lube oil is in contact with process-gas.

b) Lube-oil system forms a part of process-gas system.

c) Lube-oil system is segregated from the atmosphere.

d) Lube oil is pressurized to the discharge-gas pressure. In some cases, the lube oil can flow into the compressor bearing and seal sections without pumping-up (driven by differential pressure).

Typical systems are described in Annex E.

5.10.3.1.2 The oil system shall utilize a lubricant compatible with the process gas. Compatibility issues can include, but not be limited to, the following:

a) dilution;

b) degassing;

c) corrosion;

d) viscosity changes;

e) moisture absorption;

f) oil affecting the process;

g) shaft-seal type.

5.10.3.1.3 If any optional lube-oil components are required, this shall be specified by the purchaser.

NOTE Refer to Annex E for examples of typical lube-oil systems and their arrangements.

5.10.3.1.4 The discharge temperature in any specified operating condition shall be maintained at least 10 K (18 °F) higher than the dew point of the process-gas components and water vapour.

5.10.3.1.5 The gas pipe between the compressor discharge nozzle and the first oil separator shall be sized to withstand pulsation, high-volume mixed-phase flow and vibration loads.

Documents
Document Sharing Hub
Full document details: DIN EN ISO 10440-1:2008-09