DEUTSCHE NORM

Februar 2007

DIN EN ISO 13705

DIN

ICS 75.180.20

Ersatz für
DIN EN ISO 13705:2005-09

Erdöl-, petrochemische und Erdgasindustrie – Befeuerte Erhitzer für den allgemeinen Einsatz in Raffinerien (ISO 13705:2006); Englische Fassung EN ISO 13705:2006

Petroleum, petrochemical and natural gas industries –
Fired heaters for general refinery service (ISO 13705:2006);
English version EN ISO 13705:2006

Industries du pétrole, de la pétrochimie et du gaz naturel –
Réchauffeurs à brûleurs pour usage général dans les raffineries (ISO 13705:2006);
Version anglaise EN ISO 13705:2006

Gesamtumfang 271 Seiten

Normenausschuss Erdöl- und Erdgasgewinnung (NÖG) im DIN
Normenausschuss Maschinenbau (NAM) im DIN

AVA Documents
Document Sharing Hub

Full document details: DIN EN ISO 13705:2007-02

Nationales Vorwort

Diese Europäische Norm wurde vom Technischen Komitee CEN/TC 12 „Materialien, Ausrüstungen und Offshore-Bauwerke für die Erdöl- und Erdgasindustrie“ (Sekretariat: Frankreich) erstellt. Es handelt sich dabei um die unveränderte Übernahme von ISO 13705:2006, erarbeitet von ISO/TC 67 „Materials, equipment and offshore structures for petroleum, petrochemical and natural gas industries“; Subkomitee SC 6, „Processing equipment and systems“ (Sekretariat: Frankreich), zu welcher die nationale Zusammenarbeit beim NAM im DIN liegt.

Diese Europäische Norm enthält unter Berücksichtigung des DIN-Präsidialbeschlusses 13/1983 nur die englische Originalfassung des ISO-Norm.

Diese Norm enthält neben den gesetzlichen Einheiten auch die Einheiten „°F“, „ft“, „inch“, „lb“, „lbf“, „psi“, die im Deutschen Normenwerk nicht zugelassen sind. Es wird jedoch ausdrücklich darauf hingewiesen, dass die Anwendung dieser Einheiten im nationalen amtlichen und geschäftlichen Verkehr aufgrund des Gesetzes über Einheiten im Messwesen nicht zulässig ist.

Umrechnung:

°C = (5/9) (°F – 32)

1 ft = 0,304 8 m

1 inch = 25,4 mm

1 lb = 0,453 592 37 kg

1 lbf = 4,448 222 N

1 psi = 6 894,757 Pa

Änderungen

Gegenüber DIN EN ISO 13705:2005-09 wurden folgende Änderungen vorgenommen:

a) der frühere Abschnitt 4.1 über „Precautions“ (Vorkehrungen) wurde herausgenommen;

b) in Abschnitt 4.2 wird der Anwender in Vorklärungen zur Sicherstellung der Einhaltung aller zutreffenden nationalen und regionalen Regelungen einbezogen;

c) der Abschnitt 16.6 über die Vorbereitung zur Verschiffung wird neu aufgenommen.

Frühere Ausgaben

DIN EN ISO 13705: 2005-09

Documents
Document Sharing Hub

Full document details: DIN EN ISO 13705:2007-02

EUROPEAN STANDARD

NORME EUROPÉENNE

EUROPÄISCHE NORM

EN ISO 13705

November 2006

ICS 75.180.20

Supersedes EN ISO 13705:2001

English Version

Petroleum, petrochemical and natural gas industries – Fired heaters for general refinery service (ISO 13705:2006)

Industries du pétrole, de la pétrochimie et du gaz naturel – Réchauffeurs à brûleurs pour usage général dans les raffineries (ISO 13705:2006)

Erdöl-, petrochemische und Erdgasindustrie – Befeuerte Erhitzer für den allgemeinen Einsatz in Raffinerien (ISO 13705:2006)

This European Standard was approved by CEN on 6 November 2006.

CEN members are bound to comply with the CEN/CENELEC Internal Regulations which stipulate the conditions for giving this European Standard the status of a national standard without any alteration. Up-to-date lists and bibliographical references concerning such national standards may be obtained on application to the Central Secretariat or to any CEN member.

This European Standard exists in three official versions (English, French, German). A version in any other language made by translation under the responsibility of a CEN member into its own language and notified to the Central Secretariat has the same status as the official versions.

CEN members are the national standards bodies of Austria, Belgium, Cyprus, Czech Republic, Denmark, Estonia, Finland, France, Germany, Greece, Hungary, Iceland, Ireland, Italy, Latvia, Lithuania, Luxembourg, Malta, Netherlands, Norway, Poland, Portugal, Romania, Slovakia, Slovenia, Spain, Sweden, Switzerland and United Kingdom.

EUROPEAN COMMITTEE FOR STANDARDIZATION
COMITÉ EUROPÉEN DE NORMALISATION
EUROPÄISCHES KOMITEE FÜR NORMUNG

Management Centre: rue de Stassart, 36 B-1050 Brussels

© 2006 CEN All rights of exploitation in any form and by any means reserved worldwide for CEN national Members.

Ref. No. EN ISO 13705:2006: E

Documents
Document Sharing Hub

Full document details: DIN EN ISO 13705:2007-02

Contents

Page

Foreword ... 4

Endorsement notice ... 4

Introduction ... 5

1 Scope ... 5

2 Normative references ... 5

3 Terms and definitions ... 8

4 General ... 15
4.1 Pressure design code ... 15
4.2 Regulations ... 15
4.3 Heater nomenclature ... 15

5 Proposals ... 19
5.1 Purchaser's responsibilities ... 19
5.2 Vendor's responsibilities ... 19
5.3 Documentation ... 19
5.4 Final records ... 21

6 Design considerations ... 21
6.1 Process design ... 21
6.2 Combustion design ... 22
6.3 Mechanical design ... 22

7 Tubes ... 23
7.1 General ... 23
7.2 Extended surface ... 24
7.3 Materials ... 24

8 Headers ... 25
8.1 General ... 25
8.2 Plug headers ... 26
8.3 Return bends ... 27
8.4 Materials ... 27

9 Piping, terminals and manifolds ... 28
9.1 General ... 28
9.2 Allowable movement and loads ... 29
9.3 Materials ... 31

10 Tube supports ... 31
10.1 General ... 31
10.2 Loads and allowable stress ... 32
10.3 Materials ... 33

11 Refractories and insulation ... 34
11.1 General ... 34
11.2 Brick and tile construction ... 35
11.3 Castable construction ... 36
11.4 Ceramic-fibre construction ... 36
11.5 Multi-component lining construction ... 38
11.6 Materials ... 38

12 Structures and appurtenances ... 39
12.1 General ... 39
12.2 Structures ... 39
12.3 Header boxes, doors and ports ... 40
12.4 Ladders, platforms and stairways ... 40
12.5 Materials ... 41

Documents
Document Sharing Hub

Full document details: DIN EN ISO 13705:2007-02

Page

13 Stacks, ducts and breeching 42
13.1 General 42
13.2 Design considerations 42
13.3 Design methods 43
13.4 Static design 44
13.5 Wind-induced vibration design 45
13.6 Materials 46

14 Burners and auxiliary equipment 46
14.1 Burners 46
14.2 Sootblowers 51
14.3 Fans and drivers 51
14.4 Dampers and damper controls for stacks and ducts 51

15 Instrument and auxiliary connections 52
15.1 Flue gas and air 52
15.2 Process fluid temperature 53
15.3 Auxiliary connections 53
15.4 Tube-skin thermocouples 54
15.5 Access to connections 54

16 Shop fabrication and field erection 54
16.1 General 54
16.2 Structural-steel fabrication 55
16.3 Coil fabrication 56
16.4 Painting and galvanizing 57
16.5 Refractories and insulation 57
16.6 Preparation for shipment 58
16.7 Field erection 59

17 Inspection, examination and testing 59
17.1 General 59
17.2 Weld examination 59
17.3 Castings examination 60
17.4 Examination of other components 61
17.5 Testing 61

Annex A (informative) **Equipment data sheets** 63

Annex B (informative) **Purchaser's checklist** 92

Annex C (informative) **Proposed shop-assembly conditions** 96

Annex D (normative) **Stress curves for use in the design of tube-support elements** 98

Annex E (normative) **Centrifugal fans for fired-heater systems** 114

Annex F (normative) **Air preheat systems for fired-process heaters** 131

Annex G (informative) **Measurement of efficiency of fired-process heaters** 189

Annex H (informative) **Stack design** 257

Bibliography 267

Documents
Document Sharing Hub

Full document details: DIN EN ISO 13705:2007-02

Foreword

This document (EN ISO 13705:2006) has been prepared by Technical Committee ISO/TC 67 "Materials, equipment and offshore structures for petroleum and natural gas industries" in collaboration with Technical Committee CEN/TC 12 "Materials, equipment and offshore structures for petroleum, petrochemical and natural gas industries", the secretariat of which is held by AFNOR.

This European Standard shall be given the status of a national standard, either by publication of an identical text or by endorsement, at the latest by May 2007, and conflicting national standards shall be withdrawn at the latest by May 2007.

This document supersedes EN ISO 13705:2001.

According to the CEN/CENELEC Internal Regulations, the national standards organizations of the following countries are bound to implement this European Standard: Austria, Belgium, Cyprus, Czech Republic, Denmark, Estonia, Finland, France, Germany, Greece, Hungary, Iceland, Ireland, Italy, Latvia, Lithuania, Luxembourg, Malta, Netherlands, Norway, Poland, Portugal, Romania, Slovakia, Slovenia, Spain, Sweden, Switzerland and United Kingdom.

Endorsement notice

The text of ISO 13705:2006 has been approved by CEN as EN ISO 13705:2006 without any modifications.

Documents
Document Sharing Hub

Full document details: DIN EN ISO 13705:2007-02

Introduction

Users of this International Standard should be aware that further or differing requirements may be needed for individual applications. This International Standard is not intended to inhibit a vendor from offering, or the purchaser from accepting, alternative equipment or engineering solutions for the individual application. This may be particularly applicable where there is innovative or developing technology. Where an alternative is offered, the vendor should identify any variations from this International Standard and provide details.

In International Standards, the SI system of units is used. Where practical in this International Standard, US Customary (USC) units are included in brackets for information.

A bullet (●) at the beginning of a clause or subclause indicates that either a decision is required or further information is to be provided by the purchaser. This information should be indicated on data sheets (see examples in Annex A) or stated in the enquiry or purchase order. Decisions should be indicated on a check list (see example in Annex B).

1 Scope

This International Standard specifies requirements and gives recommendations for the design, materials, fabrication, inspection, testing, preparation for shipment, and erection of fired heaters, air preheaters, fans and burners for general refinery service.

This International Standard is not intended to apply to the design of steam reformers or pyrolysis furnaces.

2 Normative references

The following referenced documents are indispensable for the application of this document. For dated references, only the edition cited applies. For undated references, the latest edition of the referenced document (including any amendments) applies.

ISO 1461, *Hot dip galvanized coatings on fabricated iron and steel articles — Specifications and test methods*

ISO 1940-1:2003, *Mechanical vibration — Balance quality requirements for rotors in a constant (rigid) state — Part 1: Specification and verification of balance tolerances*

ISO 8501-1, *Preparation of steel substrates before application of paints and related products — Visual assessment of surface cleanliness — Part 1: Rust grades and preparation grades of uncoated steel substrates and of steel substrates after overall removal of previous coatings*

ISO 10684, *Fasteners — Hot dip galvanized coatings*

ISO 13704, *Petroleum, petrochemical and natural gas industries — Calculation of heater-tube thickness in petroleum refineries*

ISO 15649, *Petroleum and natural gas industries — Piping*

IEC 60079 (all parts), *Electrical apparatus for explosive gas atmospheres*

EN 10025-2:2004[1)], *Hot rolled products of structural steels — Part 2: Technical delivery conditions for non-alloy structural steels*

ABMA Standard 9[2)], *Load Ratings and Fatigue Life for Ball Bearings*

---

1) European Committee for Standardization (CEN), Rue de Stassart 36, B-1050 Brussels, Belgium

AVA Documents
Document Sharing Hub

Full document details: DIN EN ISO 13705:2007-02

AMCA 210[3)], *Laboratory Methods of Testing Fans for Aerodynamic Performance Rating*

AMCA 801:2001, *Industrial Process/Power Generation Fans — Specifications and Guidelines*

API 673[4)], *Centrifugal Fans for Petroleum, Chemical and Gas Industry Services*

ASME B 17.1[5)], *Keys and Keyseats*

ASME Boiler and Pressure Vessel Code, Section VIII, *Pressure Vessels*

ASTM A 36[6)], *Standard Specification for Carbon Structural Steel*

ASTM A 53, *Standard Specification for Pipe, Steel, Black and Hot-Dipped, Zinc-Coated, Welded and Seamless*

ASTM A 105, *Standard Specification for Carbon Steel Forgings for Piping Applications*

ASTM A 106, *Standard Specification for Seamless Carbon Steel Pipe for High-Temperature Service*

ASTM A 123, *Standard Specification for Zinc (Hot-Dip Galvanized) Coatings on Iron and Steel Products*

ASTM A 143, *Standard Practice for Safeguarding Against Embrittlement of Hot-Dip Galvanized Structural Steel Products and Procedure for Detecting Embrittlement*

ASTM A 153, *Standard Specification for Zinc Coating (Hot-Dip) on Iron and Steel Hardware*

ASTM A 181, *Standard Specification for Carbon Steel Forgings, for General-Purpose Piping*

ASTM A 182, *Standard Specification for Forged or Rolled Alloy-Steel Pipe Flanges, Forged Fittings, and Valves and Parts for High-Temperature Service*

ASTM A 192, *Standard Specification for Seamless Carbon Steel Boiler Tubes for High-Pressure Service*

ASTM A 193, *Standard Specification for Alloy-Steel and Stainless Steel Bolting Materials for High-Temperature or High-Pressure Service and Other Special Purpose Applications*

ASTM A 194, *Standard Specification for Carbon and Alloy Steel Nuts for Bolts for High-Pressure or High-Temperature Service, or Both*

ASTM A 209, *Standard Specification for Seamless Carbon-Molybdenum Alloy-Steel Boiler and Superheater Tubes*

ASTM A 210, *Standard Specification for Seamless Medium-Carbon Steel Boiler and Superheater Tubes*

ASTM A 213, *Standard Specification for Seamless Ferritic and Austenitic Alloy-Steel Boiler, Superheater, and Heat-Exchanger Tubes*

ASTM A 216, *Standard Specification for Steel Castings, Carbon, Suitable for Fusion Welding, for High-Temperature Service*

ASTM A 217, *Standard Specification for Steel Castings, Martensitic Stainless and Alloy, for Pressure-Containing Parts, Suitable for High-Temperature Service*

---

2) American Bearing Manufacturers Association, 2025 M. Street, NW, Suite 800, Washington, DC 20036, USA.

3) Air Movement and Control Association, 30 West University Drive, Arlington Heights, IL 60004, USA.

4) American Petroleum Institute, 1220 L Street NW, Washington, DC 20005-4070, USA.

5) American Society of Mechanical Engineers, 3 Park Avenue, New York, NY 10017, USA.

6) American Society for Testing and Materials, 100 Barr Harbor Drive, West Conshohocken, PA 19428-2959, USA.

AVA Documents
Document Sharing Hub

Full document details: DIN EN ISO 13705:2007-02

ASTM A 234, *Standard Specification for Piping Fittings of Wrought Carbon Steel and Alloy Steel for Moderate and High Temperature Service*

ASTM A 240, *Standard Specification for Chromium and Chromium-Nickel Stainless Steel Plate, Sheet, and Strip for Pressure Vessels and for General Applications*

ASTM A 242, *Standard Specification for High-Strength Low-Alloy Structural Steel*

ASTM A 283, *Standard Specification for Low and Intermediate Tensile Strength Carbon Steel Plates*

ASTM A 297, *Standard Specification for Steel Castings, Iron-Chromium and Iron-Chromium-Nickel, Heat Resistant, for General Application*

ASTM A 307, *Standard Specification for Carbon Steel Bolts and Studs, 60 000 PSI Tensile Strength*

ASTM A 312, *Standard Specification for Seamless, Welded, and Heavily Cold Worked Austenitic Stainless Steel Pipes*

ASTM A 320, *Standard Specification for Alloy Steel and Stainless Steel Bolting Materials for Low-Temperature Service*

ASTM A 325, *Standard Specification for Structural Bolts, Steel, Heat Treated, 120/105 ksi Minimum Tensile Strength*

ASTM A 335, *Standard Specification for Seamless Ferritic Alloy-Steel Pipe for High-Temperature Service*

ASTM A 351, *Standard Specification for Castings, Austenitic, for Pressure-Containing Parts*

ASTM A 376, *Standard Specification for Seamless Austenitic Steel Pipe for High-Temperature Central-Station Service*

ASTM A 384, *Standard Practice for Safeguarding Against Warpage and Distortion During Hot-Dip Galvanizing of Steel Assemblies*

ASTM A 385, *Standard Practice for Providing High-Quality Zinc Coatings (Hot-Dip)*

ASTM A 387, *Standard Specification for Pressure Vessel Plates, Alloy Steel, Chromium-Molybdenum*

ASTM A 403, *Standard Specification for Wrought Austenitic Stainless Steel Piping Fittings*

ASTM A 447, *Standard Specification for Steel Castings, Chromium-Nickel-Iron Alloy (25-12 Class), for High-Temperature Service*

ASTM A 560, *Standard Specification for Castings, Chromium-Nickel Alloy*

ASTM A 572, *Standard Specification for High-Strength Low-Alloy Columbium-Vanadium Structural Steel*

ASTM A 608, *Standard Specification for Centrifugally Cast Iron-Chromium-Nickel High-Alloy Tubing for Pressure Application at High Temperatures*

ASTM B 366, *Standard Specification for Factory-Made Wrought Nickel and Nickel Alloy Fittings*

ASTM B 407, *Standard Specification for Nickel-Iron-Chromium Alloy Seamless Pipe and Tube*

ASTM B 564, *Standard Specification for Nickel Alloy Forgings*

ASTM B 633, *Standard Specification for Electrodeposited Coatings of Zinc on Iron and Steel*

ASTM C 27, *Standard Classification of Fireclay and High-Alumina Refractory Brick*

ASTM C 155, *Standard Classification of Insulating Firebrick*

ASTM C 332, *Standard Specification for Lightweight Aggregates for Insulating Concrete*

ASTM C 401, *Standard Classification of Alumina and Alumina-Silicate Castable Refractories*

ASTM C 612, *Standard Specification for Mineral Fiber Block and Board Thermal Insulation*

AVA Documents
Document Sharing Hub

Full document details: DIN EN ISO 13705:2007-02

AWS[7] D 1.1, *Structural Welding Code — Steel*

AWS D 14.6, *Welding of Rotating Elements of Equipment*

MSS SP-53[8], *Quality Standard for Steel Castings and Forgings for Valves, Flanges and Fittings and Other Piping Components — Magnetic Particle Exam Method*

MSS SP-55, *Quality Standard for Steel Castings for Valves, Flanges and Fittings and Other Piping Components — Visual Method for Evaluation of Surface Irregularities*

MSS SP-93, *Quality Standard for Steel Castings and Forgings for Valves, Flanges, and Fittings and Other Piping Components — Liquid Penetrant Examination Method*

NFPA 70[9], *National Electrical Code*

SSPC SP 6[10], *Commercial Blast Cleaning — NACE No. 3*

3 Terms and definitions

For the purposes of this document, the following terms and definitions apply.

NOTE Terms and definitions related to centrifugal fans are given in Annex E.

3.1
air heater
air preheater
heat transfer apparatus through which combustion air is passed and heated by a medium of higher temperature, such as combustion products, steam or other fluid

3.2
anchor
tieback
metallic or refractory device that holds the refractory or insulation in place

3.3
arch
flat or sloped portion of the heater radiant section opposite the floor

3.4
atomizer
device used to reduce a liquid fuel oil to a fine mist, using steam, air or mechanical means

3.5
backup layer
refractory layer behind the hot-face layer

3.6
balanced draught heater
heater that uses forced-draught fans to supply combustion air and uses induced-draught fans to remove flue gases

---

7) American Welding Society, 550 NW Le Jeune Road, Miami, FL 33126, USA.

8) Manufacturers Standardization Society, 127 Park Street NE, Vienna, VA 22180, USA.

9) National Fire Protection Association, 1 Batterymarch Park, Quincy, MA 02269-9101, USA.

10) The Society for Protective Coatings, 40, 24th Street, Pittsburg, PA 15222-4643, USA.

Documents
Document Sharing Hub
Full document details: DIN EN ISO 13705:2007-02

3.7
breeching
heater section where flue gases are collected after the last convection coil for transmission to the stack or the outlet ductwork

3.8
bridgewall
gravity wall
wall that separates two adjacent heater zones

3.9
bridgewall temperature
temperature of flue gas leaving the radiant section

3.10
burner
device that introduces fuel and air into a heater at the desired velocities, turbulence and concentration to establish and maintain proper ignition and combustion

NOTE Burners are classified by the type of fuel fired, such as oil, gas, or a combination of gas and oil, which may be designated as “dual fuel” or “combination”.

3.11
butterfly damper
single-blade damper, which pivots about its centre

3.12
casing
metal plate used to enclose the fired heater

3.13
castable
insulating concrete poured or gunned in place to form a rigid refractory shape or structure

3.14
ceramic fibre
fibrous refractory insulation which can be in the form of refractory ceramic fibre (RCF) or man-made vitreous fibre (MMVF)

NOTE Applicable forms include bulk, blanket, board, modules, paper, coatings, pumpables and vacuum-formed shapes.

3.15
convection section
portion of the heater in which the heat is transferred to the tubes primarily by convection

3.16
corbel
projection from the refractory surface generally used to prevent flue gas bypassing the tubes of the convection section if they are on a staggered pitch

3.17
corrosion allowance
additional material thickness added to allow for material loss during the design life of the component

3.18
corrosion rate
rate of reduction in the material thickness due to chemical attack from the process fluid or flue gas or both

Documents
Document Sharing Hub

Full document details: DIN EN ISO 13705:2007-02

3.19
crossover
interconnecting piping between any two heater-coil sections

3.20
damper
device for introducing a variable resistance in order to regulate the flow of flue gas or air

3.21
direct-air preheater
heat exchanger that transfers heat directly between the flue gas and the combustion air

NOTE A regenerative air preheater uses heated rotating elements and a recuperative design uses stationary tubes, plates or cast iron elements to separate the two heating media.

3.22
draught
negative pressure (vacuum) of the air and/or flue gas measured at any point in the heater

3.23
draught loss
pressure drop (including buoyancy effect) through duct conduits or across tubes and equipment in air and flue-gas systems

3.24
duct
conduit for air or flue-gas flow

3.25
fuel efficiency
total heat absorbed divided by the total input of heat derived from the combustion of fuel only (lower heating value basis)

NOTE This definition excludes sensible heat of the fuels and applies to the net amount of heat exported from the unit.

3.26
thermal efficiency
total heat absorbed divided by the total input of heat derived from the combustion of fuel (h_L) plus sensible heats from air, fuel and any atomizing medium

3.27
erosion
reduction in material thickness due to mechanical attack from a fluid

3.28
excess air
amount of air above the stoichiometric requirement for complete combustion

NOTE Excess air is expressed as a percentage.

3.29
extended surface
heat-transfer surface in the form of fins or studs attached to the heat-absorbing surface

3.30
extension ratio
ratio of total outside exposed surface to the outside surface of the bare tube

Documents
Document Sharing Hub
Full document details: DIN EN ISO 13705:2007-02

3.31
flue gas
gaseous product of combustion including excess air

3.32
forced-draught heater
heater for which combustion air is supplied by a fan or other mechanical means

3.33
fouling allowance
factor to allow for a layer of residue that increases the pressure drop

NOTE 1 This residue is usually a build-up of coke or scale on the inner surface of a coil.

NOTE 2 The fouling allowance is used in calculating the fouled pressure drop.

3.34
fouling resistance
factor used to calculate the overall heat transfer coefficient

NOTE The inside fouling resistance is used to calculate the maximum metal temperature for design. The external fouling resistance is used to compensate the loss of performance due to deposits on the external surface of the tubes or extended surface.

3.35
guillotine
isolation blind
single-blade device used to isolate equipment or heaters

3.36
header
return bend
cast or wrought fitting shaped in a 180° bend and used to connect two or more tubes

3.37
header box
internally insulated structural compartment, separated from the flue-gas stream, which is used to enclose a number of headers or manifolds

NOTE Access is afforded by means of hinged doors or removable panels.

3.38
heat absorption
total heat absorbed by the coils, excluding any combustion-air preheat

3.39
average heat flux density
heat absorbed divided by the exposed heating surface of the coil section

NOTE Average flux density for an extended-surface tube is indicated on a bare surface basis with extension ratio noted.

3.40
maximum heat flux density
maximum local rate of heat transfer in the coil section

3.41
total heat release
heat liberated from the specified fuel, using the lower heating value of the fuel

Documents
Document Sharing Hub

Full document details: DIN EN ISO 13705:2007-02

3.42
volumetric heat release
heat released divided by the net volume of the radiant section, excluding the coils and refractory dividing walls

3.43
higher heating value
h_H
gross heating value
total heat obtained from the combustion of a specified fuel at 15 °C (60 °F)

3.44
lower heating value
h_L
net heating value
higher heating value minus the latent heat of vaporization of the water formed by combustion of hydrogen in the fuel

3.45
hot-face layer
refractory layer exposed to the highest temperatures in a multilayer or multi-component lining

3.46
hot-face temperature
temperature of the refractory surface in contact with the flue gas or heated combustion air

3.47
indirect air preheater
fluid-to-air heat-transfer device

NOTE The heat transfer can be accomplished by using a heat-transfer fluid, process stream or utility stream that has been heated by the flue gas or other means. A heat pipe air preheater uses a vaporizing/condensing fluid to transfer heat between the flue gas and air.

3.48
induced-draught heater
heater that uses a fan to remove flue gases and to maintain a negative pressure in the heater to induce combustion air without a forced-draught fan

3.49
interface temperature
calculated temperature between each layer of multilayer or multi-component refractory construction

3.50
jump over
interconnecting pipework within a heater coil section

3.51
louvre damper
damper consisting of several blades, each of which pivots about its centre and is linked to the other blades for simultaneous operation

3.52
manifold
chamber for the collection and distribution of fluid to or from multiple parallel flow paths

3.53
man-made vitreous fibre
MMVF
synthetic amorphous glass insulation fibre, based on a calcium, magnesium and silicate chemistry, that has enhanced solubility in body fluids

Documents
Document Sharing Hub
Full document details: DIN EN ISO 13705:2007-02

3.54
metal fibre reinforcement
stainless steel needles added to castable for improved toughness and durability

3.55
monolithic lining
single-component lining system

3.56
mortar
refractory-material preparation used for laying and bonding refractory bricks

3.57
multi-component lining
refractory system consisting of two or more layers of different refractory types

NOTE Examples of refractory types are castable, insulating firebrick, firebrick, block, board and ceramic fibre.

3.58
multilayer lining
refractory system consisting of two or more layers of the same refractory type

3.59
natural-draught heater
heater in which a stack effect induces the combustion air and removes the flue gases

3.60
normal heat release
design heat absorption of the heater divided by the calculated fuel efficiency

3.61
pass
stream
flow circuit consisting of one or more tubes in series

3.62
pilot
small burner that provides ignition energy to light the main burner

3.63
plenum
windbox
chamber surrounding the burners that is used to distribute air to the burners or reduce combustion noise

3.64
plug header
cast return bend provided with one or more openings for the purpose of inspection or mechanical tube cleaning

3.65
pressure design code
recognized pressure vessel standard specified or agreed by the purchaser

EXAMPLE ASME Boiler and Pressure Vessel Code, Section VIII.

3.66
pressure drop
difference between the inlet and the outlet static pressures between termination points, excluding the static differential head

AVA Documents
Document Sharing Hub

Full document details: DIN EN ISO 13705:2007-02

3.67
primary air
portion of the total combustion air that first mixes with the fuel

3.68
protective coating
corrosion-resistant material applied to a metal surface

EXAMPLE Coating on casing plates behind porous refractory materials to protect against sulfur in the flue gases.

3.69
radiant section
portion of the heater in which heat is transferred to the tubes primarily by radiation

3.70
radiation loss
setting loss
heat lost to the surroundings from the casing of the heater and the ducts and auxiliary equipment (when heat recovery systems are used)

3.71
secondary air
air supplied to the fuel to supplement primary air

3.72
setting
heater casing, brickwork, refractory and insulation, including the tiebacks

3.73
shield section
shock section
tubes that shield the remaining convection-section tubes from direct radiation

3.74
sootblower
device used to remove soot or other deposits from heat-absorbing surfaces in the convection section

NOTE Steam is normally the medium used for soot-blowing.

3.75
stack
vertical conduit used to discharge flue gas to the atmosphere

3.76
strake
spoiler
metal attachment to a stack that can prevent the formation of von Karman vortices that can cause wind-induced vibration

3.77
structural design code
structural design standard specified or agreed by the purchaser

EXAMPLE International Building Code.

3.78
target wall
reradiating wall
vertical refractory firebrick wall which is exposed to direct flame impingement on one or both sides

Documents
Document Sharing Hub
Full document details: DIN EN ISO 13705:2007-02

3.79
temperature allowance
number of degrees Celsius (Fahrenheit) to be added to the process fluid temperature to account for flow maldistribution and operating unknowns

NOTE The temperature allowance is added to the calculated maximum tube-metal temperature or the equivalent tube-metal temperature to obtain the design metal temperature

3.80
terminal
flanged or welded connection to or from the coil providing for inlet and outlet of fluids

3.81
tube guide
device used with vertical tubes to restrict horizontal movement while allowing the tube to expand axially

3.82
tube retainer
device used to restrain horizontal radiant tubes from lifting off the intermediate tube supports during operation

3.83
tube support
tube sheet
device used to support tubes

3.84
vapour barrier
metallic foil placed between layers of refractory as a barrier to flue gas flow

4 General

4.1 Pressure design code

- The pressure design code shall be specified or agreed by the purchaser. Pressure components shall comply with the pressure design code and the supplemental requirements in this International Standard.

4.2 Regulations

- The purchaser and the vendor shall mutually determine the measures required to comply with any local or national regulations applicable to the equipment.

4.3 Heater nomenclature

In a fired heater, heat liberated by the combustion of fuels is transferred to fluids contained in tubular coils within an internally insulated enclosure. The type of heater is normally described by the structural configuration, radiant-tube coil configuration and burner arrangement. Some examples of structural configurations are cylindrical, box, cabin and multi-cell box. Examples of radiant-tube coil configurations include vertical, horizontal, helical and arbor. Examples of burner arrangements include up-fired, down-fired and wall-fired. The wall-fired arrangement can be further classified as sidewall, endwall and multilevel.

Figure 1 illustrates some typical heater types.

Figure 2 illustrates typical burner arrangements.

Various combinations of Figures 1 and 2 can be used. For example, Figure 1 c) can employ burner arrangements as in Figure 2 a), b) or c). Similarly, Figure 1 d) can employ burner arrangements as in Figure 2 a) or d).

Documents
Document Sharing Hub

Full document details: DIN EN ISO 13705:2007-02

Figure 3 shows typical components.

Annex F gives guidelines for the design, selection and evaluation of air preheat (APH) systems. Figures F.1, F.2 and F.3 show typical APH systems.

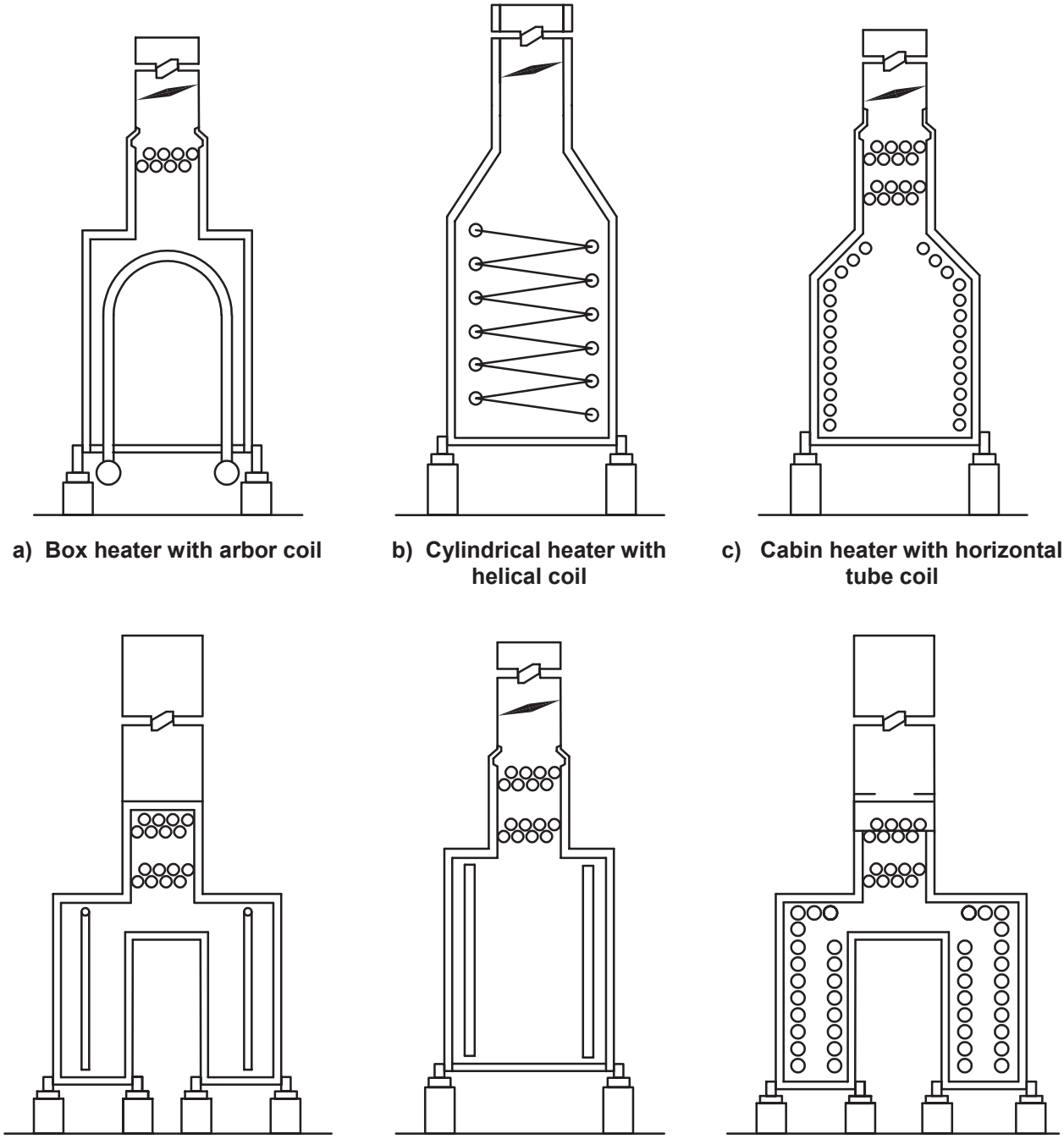

a) Box heater with arbor coil

b) Cylindrical heater with helical coil

c) Cabin heater with horizontal tube coil

d) Box heater with vertical tube coil

e) Cylindrical heater with vertical coil

f) Box heater with horizontal tube coil

Figure 1 — Typical heater types

Documents
Document Sharing Hub
Full document details: DIN EN ISO 13705:2007-02

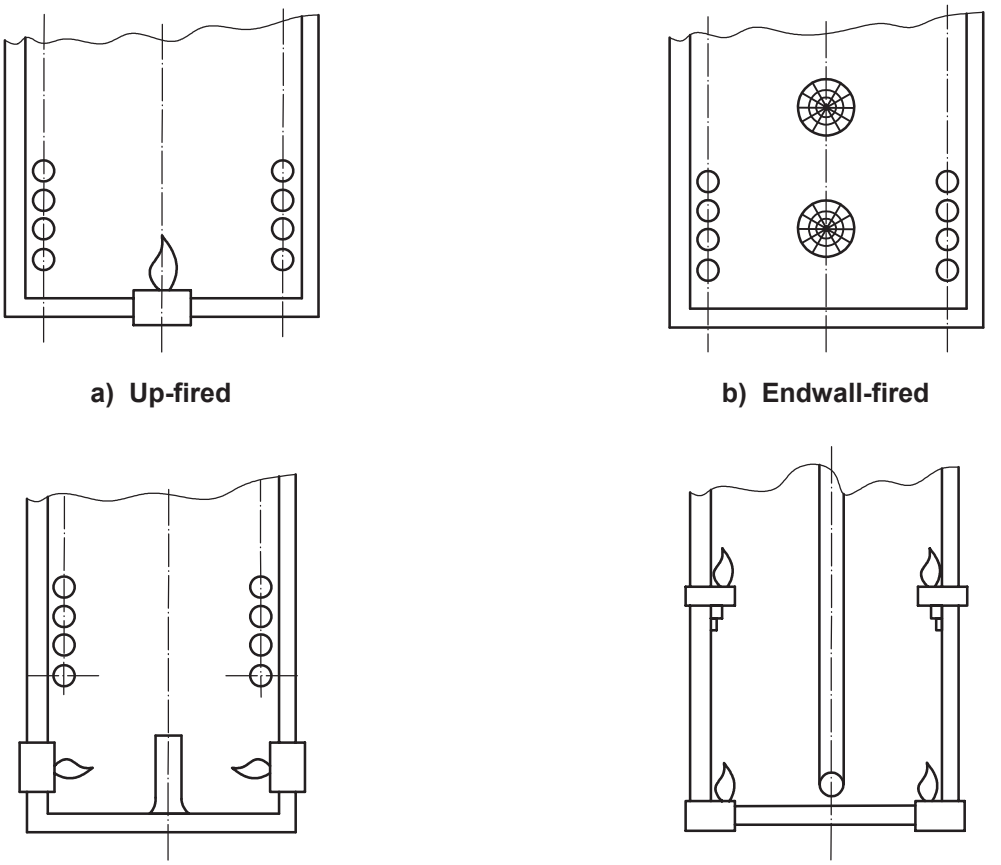

Figure 2 — Typical burner arrangements (elevation view)

Documents
Document Sharing Hub

Full document details: DIN EN ISO 13705:2007-02

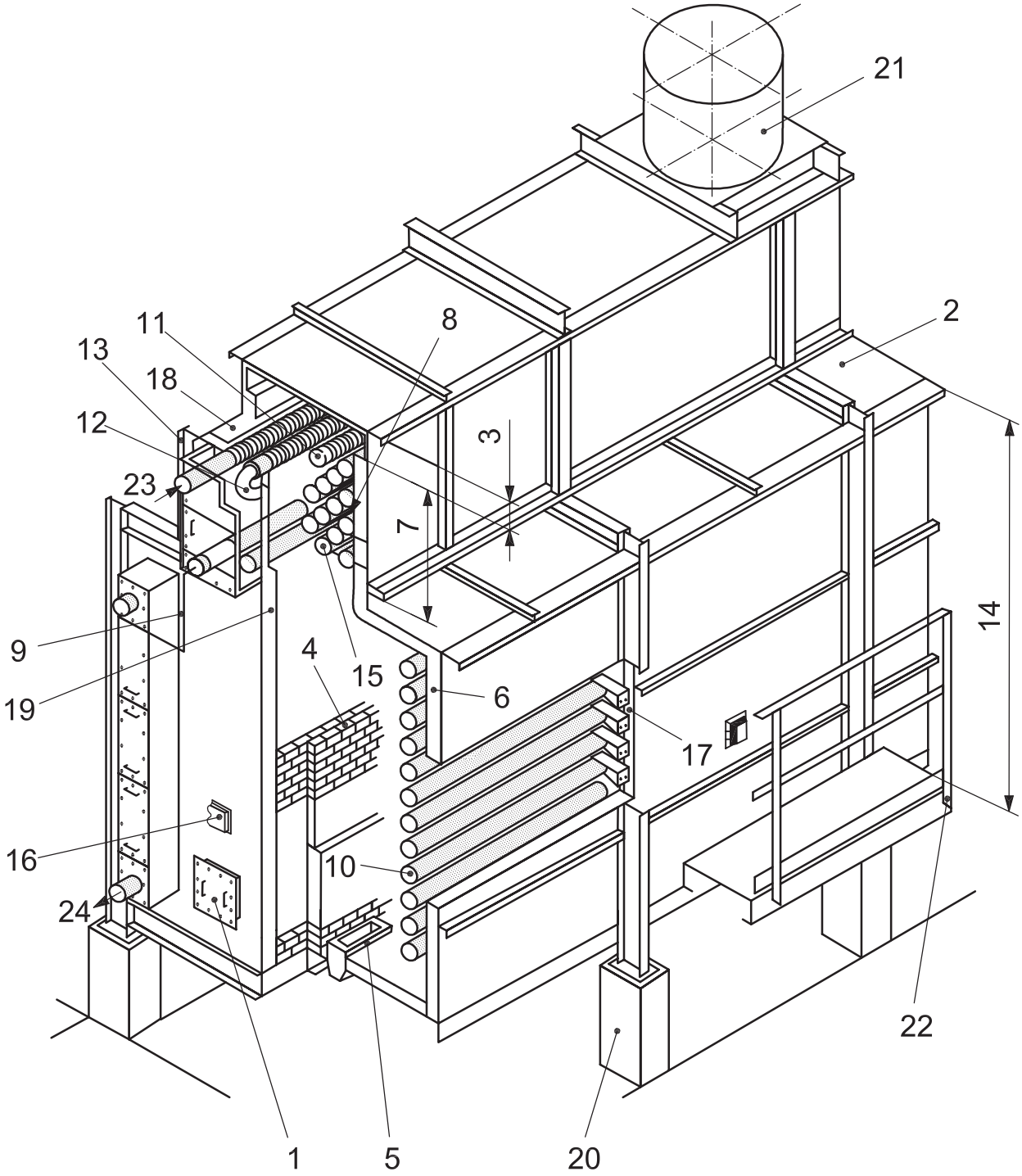

Key

1	access door	7	convection section	13	header box	19	end-tube sheet
2	arch	8	corbel	14	radiant section	20	pier
3	breeching	9	crossover	15	shield section	21	stack/duct
4	bridgewall	10	tubes	16	observation door	22	platform
5	burner	11	extended surface	17	tube support	23	process in
6	casing	12	return bend	18	refractory lining	24	process out

Figure 3 — Heater components

Documents
Document Sharing Hub
Full document details: DIN EN ISO 13705:2007-02

5 Proposals

5.1 Purchaser's responsibilities

5.1.1 The purchaser's enquiry shall include data sheets, checklist and other applicable information outlined in this International Standard. This information shall include any special requirements or exceptions to this International Standard.

5.1.2 The purchaser is responsible for the correct process specification to enable the vendor to prepare the fired-heater design. The purchaser should complete, as a minimum, those items on the data sheet that are designated by an asterisk (*).

5.1.3 The purchaser's enquiry shall state clearly the vendor's scope of supply.

● **5.1.4** The purchaser's enquiry shall specify the number of copies of drawings, data sheets, specifications, data reports, operating manuals, installation instructions, spare parts lists and other data to be supplied by the vendor, as required by 5.2, 5.3 and 5.4.

5.2 Vendor's responsibilities

The vendor's proposal shall include

a) completed data sheets for each fired heater and the associated equipment (see examples in Annex A);

b) an outline drawing showing firebox dimensions, burner layout and clearances, arrangement of tubes, platforms, ducting, stack, breeching, air pre-heater and fans;

c) full definition of the extent of shop assembly (format given in Annex C may be used), including the number, size and mass of prefabricated parts and the number of field welds;

d) detailed description of any exceptions to the specified requirements;

● e) a completed noise data sheet if specified by the purchaser;

f) curves for heaters in vaporizing service, showing pressure, temperature, vaporization and bulk velocity as a function of the tube number;

g) a time schedule for submission of all required drawings, data and documents;

h) a programme for scheduling the work after receipt of an order; this should include a specified period of time for the purchaser to review and return drawings, procurement of materials, manufacture and the required date of supply;

i) a list of utilities and quantities required;

● j) if specified by the purchaser, a list of sub-suppliers proposed for the pipes and fittings, coil fabrication, extended surfaces on tubes, castings, steel fabrication, ladders and platforms, refractory supply, refractory installation, air preheaters, fans, burners and other auxiliary equipment.

5.3 Documentation

5.3.1 Drawings for purchaser's review

The vendor shall submit general arrangement drawings of each heater, for review. The final general arrangement drawings shall include the following information:

a) heater service, the purchaser's equipment number, the project name and location, the purchase order numbers and the vendor's reference number;

Documents
Document Sharing Hub

Full document details: DIN EN ISO 13705:2007-02

b) coil terminal sizes, including flange ratings and facings; dimensional locations; direction of process flow; and allowable loads, moments and forces on terminals;

c) coil and crossover arrangements, tube spacings, tube diameters, tube-wall thicknesses, tube lengths, material specifications, including grades for pressure parts only, and all extended surface data;

d) coil design pressures, hydrostatic test pressures, design fluid and tube-wall temperatures and corrosion allowance;

e) a coil design code or recommended practice and fabrication code or specification;

f) refractory and insulation types, thicknesses and service temperature ratings;

g) types and materials of anchors for refractory and insulation;

h) location and number of access doors, observation doors, burners, sootblowers, dampers and instrument and auxiliary connections;

i) location and dimension of platforms, ladders and stairways;

j) overall dimensions, including auxiliary equipment.

5.3.2 Foundation-loading diagrams

The vendor shall submit for purchaser's review foundation-loading diagrams for each heater. The diagram shall include the following information:

a) number and location of piers and supports;

b) baseplate dimensions;

c) anchor bolt locations, bolt diameters and projection above foundations;

d) dead loads, live loads, wind or earthquake loads, reaction to overturning moments and lateral shear loads.

5.3.3 Documents for purchaser's review

The vendor shall also submit to the purchaser the following documents for review and comment (individual stages of fabrication shall not proceed until the relevant document has been reviewed and commented upon):

a) structural steel drawings, details of stacks, ducts and dampers and structural calculations;

b) burner assembly drawings and, if applicable, burner piping drawings;

● c) tube-support details and, if specified by the purchaser, design calculations;

d) thermowell and thermocouple details;

e) welding, examination and test procedures;

f) installation, dry-out and test procedures for refractories and insulation;

g) refractory thickness calculations, including temperature gradients through all refractory sections and sources of thermal conductivities;

● h) decoking procedures if specified by the purchaser;

i) installation, operation and maintenance instructions for the heater and for auxiliary equipment such as air preheaters, fans, drivers, dampers and burners;

Documents
Document Sharing Hub

Full document details: DIN EN ISO 13705:2007-02

j) performance curves or data sheets for air preheaters, fans, drivers and burners and other auxiliary equipment;

k) noise data sheets if specified by the purchaser.

5.3.4 Certified drawings and diagrams

After receipt of the purchaser's comments on the general arrangement drawings and diagrams, the vendor shall furnish certified general arrangement drawings and foundation loading diagrams. The vendor shall furnish design-detail drawings, erection drawings and an erection sequence. Drawings of auxiliary equipment shall also be furnished.

5.4 Final records

Within a specified time after completion of construction or shipment, the vendor shall furnish the purchaser with the following documents:

a) data sheets and drawings representing the as-manufactured equipment; in the event field-changes are made, as-built drawings and data sheets shall not be provided unless specifically requested by the purchaser;

b) certified material reports, mill test reports or ladle analysis for all pressure parts and for alloy extended surfaces;

c) installation, operation and maintenance instructions for the heater and auxiliary equipment, such as air preheaters, fans, drivers, dampers and burners;

d) performance curves or data sheets for air preheaters, fans, drivers and burners and other auxiliary equipment;

e) bill of materials;

f) noise data sheets if specified by the purchaser;

g) refractory dry-out procedures;

h) decoking procedures;

i) test certificates for tube-support castings;

j) all other test documents, including test reports and non-destructive examination reports.

6 Design considerations

6.1 Process design

6.1.1 Heaters shall be designed for uniform heat distribution. Multi-pass heaters shall be designed for hydraulic symmetry of all passes.

6.1.2 The number of passes for vaporizing fluids shall be minimized. Each pass shall be a single circuit from inlet to outlet.

6.1.3 Average heat flux density in the radiant section is normally based on a single row of tubes spaced at two nominal tube diameters. The first row of shield-section tubes shall be considered as radiant service in determining the average heat flux density if these tubes are exposed to direct flame radiation.

6.1.4 Where the average radiant heat flux density is specified on the basis of two nominal diameters, the vendor may increase the flux rate for other coil arrangements, e.g. for three nominal diameters or double-

AVA Documents
Document Sharing Hub

Full document details: DIN EN ISO 13705:2007-02

sided firing, provided the maximum flux, including mal-distribution, shall not exceed that based on two nominal diameters.

6.1.5 The maximum allowable inside film temperature for any process service shall not be exceeded in the radiant, shield or convection sections anywhere in the specified coil.

6.2 Combustion design

6.2.1 Margins provided in the combustion system are not intended to permit operation of the heater at greater than the design process duty.

6.2.2 Calculated fuel efficiencies shall be based on the lower heating value of the design fuel and shall include a radiation loss of 1,5 % of the calculated normal fuel heat release. Heaters employing flue gas/air preheat systems shall include a radiation loss of 2,5 % of the fuel heat release based on the lower heating value.

6.2.3 Unless otherwise specified by the purchaser, calculated efficiencies for natural-draught operation shall be based upon 20 % excess air if gas is the primary fuel and 25 % excess air if oil is the primary fuel. In the case of forced-draught operation, calculated efficiencies shall be based on 15 % excess air for fuel gas and 20 % excess air for fuel oil.

6.2.4 The heater efficiency and tube-wall temperature shall be calculated using the specified fouling resistances.

NOTE Annex G gives guidance on the measurement of efficiency.

6.2.5 Volumetric heat release of the radiant section shall not exceed 125 kW/m^3 (12 000 Btu/h/ft^3) for oil-fired heaters and 165 kW/m^3 (16 000 Btu/h/ft^3) for gas-fired heaters based upon the design heat absorption.

6.2.6 Stack and flue-gas systems shall be designed so that a negative pressure of at least 25 Pa (0,10 in of water column) is maintained in the arch section or point of minimum draught location (which is typically below the shield section) at 120 % of normal heat release with design excess air and design stack temperature.

6.3 Mechanical design

6.3.1 Provisions for thermal expansion shall take into consideration all specified operating conditions, including short-term conditions such as steam-air decoking.

● **6.3.2** If specified by the purchaser, the convection-section tube layout shall include space for future installation of sootblowers, water washing or steam-lancing doors.

● **6.3.3** If the heater is designed for heavy fuel-oil firing, sootblowers shall be provided for convection-section cleaning. If light fuel oils such as naphtha are to be fired, the purchaser shall specify whether sootblowers are to be supplied.

6.3.4 The convection-section design shall incorporate space for the future addition of two rows of tubes, including the end and intermediate tubesheets. Placement of sootblowers and cleaning lanes shall be suitable for the addition of the future tubes. Holes in end-tube sheets shall be plugged off to prevent flue-gas leakage.

6.3.5 Vertical cylindrical heaters shall be designed with a maximum height-to-diameter (h/w) ratio of 2,75, where the height is that of the radiant section (inside refractory face) and the diameter is that of the tube circle, both measured in the same units.

Documents
Document Sharing Hub
Full document details: DIN EN ISO 13705:2007-02

6.3.6 For single-fired, box-type, floor-fired heaters with sidewall tubes only, an equivalent *h/w* factor shall be determined by dividing the height of the wall bank (or the straight tube length for vertical tubes) by the width of the tube bank and applying the following limitations:

Design absorption MW (Btu/h × 10^6)	*h/w* max.	*h/w* min.
Up to 3,5 (12)	2,00	1,50
3,5 to 7 (12 to 24)	2,50	1,50
Over 7 (24)	2,75	1,50

6.3.7 Shield sections shall have at least three rows of bare tubes.

6.3.8 Except for the first shield row, convection sections shall be designed with corbels or baffles to minimize the amount of flue gas bypassing the heating surface.

6.3.9 The minimum clearance from grade to burner plenum or register shall be 2 m (6,5 ft) for floor-fired heaters, unless otherwise specified by the purchaser.

6.3.10 For vertical-tube, vertical-fired heaters, the maximum radiant straight tube length shall be 18,3 m (60 ft). For horizontal heaters fired from both ends, the maximum radiant straight tube length shall be 12,2 m (40 ft).

6.3.11 Radiant tubes shall be installed with minimum spacing from refractory or insulation to tube centre-line of 1,5 nominal tube diameters, with a clearance of not less than 100 mm (4 in) from the refractory or insulation. For horizontal radiant tubes, the minimum clearance from floor refractory to tube outside diameter shall be not less than 300 mm (12 in).

6.3.12 The heater arrangement shall allow for replacement of individual tubes or hairpins without disturbing adjacent tubes.

7 Tubes

7.1 General

7.1.1 Tube-wall thickness for coils shall be determined in accordance with ISO 13704, in which the practical limit to minimum thickness for new tubes is specified. For materials not included, tube-wall thickness shall be determined in accordance with ISO 13704 using stress values mutually agreed upon between purchaser and supplier.

7.1.2 Unless otherwise agreed between the purchaser and supplier, calculations made to determine tube-wall thickness for coils shall include considerations for erosion and corrosion allowances for the various coil materials. The following corrosion allowances shall be used as a minimum:

a) carbon steel through C-1/2Mo: 3 mm (0,125 in);

b) low alloys through 9Cr-1Mo: 2 mm (0,080 in);

c) above 9Cr-1Mo through austenitic steels: 1 mm (0,040 in).

7.1.3 Maximum tube-metal temperature shall be determined in accordance with ISO 13704. The tube-metal temperature allowance shall be at least 15 °C (25 °F).

7.1.4 All tubes shall be seamless. Tubes shall not be circumferentially welded to obtain the required tube length, unless approved by the purchaser, in which case the location of welds shall be agreed by purchaser. Electric flash welding shall not be used for intermediate welds. Tubes furnished to an average wall thickness shall be in accordance with suitable tolerances so that the required minimum wall thickness is provided.

AVA Documents
Document Sharing Hub

Full document details: DIN EN ISO 13705:2007-02

7.1.5 Tubes, if projected into header box housings, shall extend at least 150 mm (6 in), in the cold position, beyond the face of the end tube sheet, of which 100 mm (4 in) shall be bare.

7.1.6 Tube size (outside diameter in inches) shall be selected from the following sizes: 2,375; 2,875; 3,50; 4,00; 4,50; 5,563; 6,625; 8,625; or 10,75. Other tube sizes should be used only if warranted by special process considerations.

7.1.7 If the shield and radiant tubes are in the same service, the shield tubes exposed to direct-flame radiation shall be of the same material as the connecting radiant tubes.

7.2 Extended surface

● **7.2.1** The extended surface in convection sections may be studded (where each stud is attached to the tube by arc or resistance welding) or finned (where helically wound fins are high-frequency, continuously welded to the tube). The purchaser shall specify or agree the type of extended surface to be provided. In the case of finning, the purchaser shall specify or agree whether the fins shall be solid or segmented (serrated).

7.2.2 Metallurgy for the extended surface shall be selected on the basis of maximum calculated tip temperature as listed in Table 1.

7.2.3 Extended surface dimensions shall be limited to those listed in Table 2.

Table 1 — Extended surface materials

Material	Studs		Fins	
	Maximum tip temperature		Maximum tip temperature	
	°C	(°F)	°C	(°F)
Carbon steel	510	(950)	454	(850)
2 1/4Cr-1Mo, 5Cr-1/2Mo	593	(1 100)	549	(1 000)
11-13Cr	649	(1 200)	593	(1 100)
18Cr-8Ni stainless steel	815	(1 500)	815	(1 500)
25Cr-20Ni stainless steel	982	(1 800)	982	(1 800)

Table 2 — Extended surface dimensions

Fuel	Studs				Fins					
	Minimum diameter		Maximum height		Minimum normal thickness		Maximum height		Maximum number per unit length	
	mm	(in)	mm	(in)	mm	(in)	mm	(in)	per m	(per in)
Gas	12,5	(1/2)	25	(1)	1,3	(0,05)	25,4	(1)	197	(5)
Oil	12,5	(1/2)	25	(1)	2,5	(0,10)	19,1	(3/4)	118	(3)

7.3 Materials

Tube materials shall conform to the specifications listed in Table 3 or their equivalent agreed by the purchaser.

Documents
Document Sharing Hub
Full document details: DIN EN ISO 13705:2007-02

Table 3 — Heater-tube materials specifications

Material	ASTM specifications	
	Pipe	Tube
Carbon steel	A 53, A 106 Gr B	A 192, A 210 Gr A-1
Carbon-1/2Mo	A 335 Gr P1	A 209 Gr T1
1 1/4Cr-1/2Mo	A 335 Gr P11	A 213 Gr T11
2 1/4Cr-1Mo	A 335 Gr P22	A 213 Gr T22
3Cr-1Mo	A 335 Gr P21	A 213 Gr T21
5Cr-1/2Mo	A 335 Gr P5	A 213 Gr T5
5Cr-1/2Mo-Si	A 335 Gr P5b	A 213 Gr T5b
9Cr-1Mo	A 335 Gr P9	A 213 Gr T9
9Cr-1Mo-V	A 335 Gr P91	A 213 Gr T91
18Cr-8Ni	A 312, A 376, TP 304, TP 304H and TP 304L	A 213, TP 304, TP 304H and TP 304L
16Cr-12Ni-2Mo	A 312, A 376, TP 316, TP 316H and TP 316L	A 213, TP 316, TP 316H and TP 316L
18Cr-10Ni-3Mo	A 312, TP 317 and TP 317L	A 213, TP 317 and TP 317L
18Cr-10Ni-Ti	A 312, A 376, TP 321 and TP 321H	A 213, TP 321 and TP 321H
18Cr-10Ni-Nb[a]	A 312, A 376, TP 347 and TP 347H	A 213, TP 347 and TP 347H
Nickel alloy 800 H/800 HT[b]	B 407	B 407
25Cr-20Ni	A 608 Gr HK40	A 213 TP 310H

[a] Niobium (Nb) was formerly called columbium (Cb).

[b] Minimum grain size shall be ASTM #5 or coarser.

8 Headers

8.1 General

8.1.1 The design stress for headers shall be no higher than that allowed for similar materials as given in ISO 13704 and shall be reduced by casting-quality factors if made from castings. Casting-quality factors shall be in accordance with ISO 15649.

NOTE For the purposes of this provision, ASME B 31.3[14] is equivalent to ISO 15649.

8.1.2 Headers shall be of metallurgy equivalent to the tubes.

8.1.3 Headers shall be welded return bends or welded plug headers, depending on the service and operating conditions.

8.1.4 The specified header wall thickness shall include a corrosion allowance. This allowance shall not be less than that used for the tubes.

Documents
Document Sharing Hub

Full document details: DIN EN ISO 13705:2007-02

8.2 Plug headers

8.2.1 Plug headers shall be located in a header box and shall be selected for the same design pressure as the connecting tubes and for a design temperature equal to the maximum fluid operating temperature at that location, plus a minimum of 30 °C (55 °F).

8.2.2 Tubes and plug headers shall be arranged so that there is sufficient space for field maintenance operations, such as welding and stress relieving.

8.2.3 If plug headers are specified to permit mechanical cleaning of coked or fouled tubes, they shall consist of the two-hole type. Single-hole, 180° plug headers may be installed only for tube inspection and draining.

8.2.4 If plug headers are specified to be used with horizontal tubes that are 18,3 m (60 ft) or longer, two-hole plug headers shall be used for both ends of the coil assembly. For shorter coils, plug headers shall be provided on one end of the coil with welded return bends on the opposite end.

8.2.5 If plug headers are specified for vertical tube heaters, two-hole plug headers shall be installed on the top of the coil and one-hole Y-fittings at the bottom of the tubes.

8.2.6 Headers and corresponding plugs shall be match-marked by 12 mm (0,5 in) permanent numerals and installed in accordance with a fitting-location drawing.

8.2.7 Type 304 stainless steel thermowells, if required for temperature measurement and control, shall be provided in the plugs of the headers.

8.2.8 Tube centre-to-centre dimensions shall be as shown in Table 4.

Table 4 — Tube centre-to-centre dimensions

Tube outside diameter	Header centre-to-centre dimension	
mm (in)	mm	(in)
60,3 (2,375)	101,6	(4,00) [a]
73,0 (2,875)	127,0	(5,00) [a]
88,9 (3,50)	152,4	(6,00) [a]
101,6 (4,00)	177,8	(7,00) [a]
114,3 (4,50)	203,2	(8,00) [a]
127,0 (5,00)	228,6	(9,00)
141,3 (5,563)	254,0	(10,00) [a]
152,4 (6,00)	279,4	(11,00)
168,3 (6,625)	304,8	(12,00) [a]
193,7 (7,625)	355,6	(14,00)
219,1 (8,625)	406,4	(16,00) [a]
273,1 (10,75)	508,0	(20,00) [a]

NOTE Centre-to-centre dimensions are applicable only to manufacturers' standard header pressure ratings for 5 850 kPa (850 psig) nominal fittings.

[a] This centre-to-centre dimension equals two times the corresponding nominal size and is based on the centre-to-centre dimension for short-radius welded return bends.

8.2.9 Plugs and screws shall be assembled in the fittings with an approved compound on the seats and screws to prevent galling.

Documents
Document Sharing Hub
Full document details: DIN EN ISO 13705:2007-02

8.3 Return bends

8.3.1 Return bends should be used for the following conditions:

a) in clean service, where coking or fouling of tubes is not anticipated;

b) where leakage is a hazard;

c) where steam-air decoking facilities are provided for decoking of furnace tubes;

d) where mechanical pigging is the specified cleaning method.

8.3.2 Return bends inside the firebox shall be selected for the same design pressure and temperature as the connecting tubes. Return bends inside a header box shall be selected for the same design pressure as the connecting tubes and for a design temperature equal to the maximum fluid operating temperature at that location plus a minimum of 30 °C (55 °F). Return bends shall be at least the same thickness as the connecting tubes.

8.3.3 Regardless of the location of the welded return bends, the heater design shall incorporate means to permit convenient removal and replacement of tubes and return bends.

8.3.4 Longitudinally welded fittings shall not be used.

8.4 Materials

8.4.1 Plug header and return bend material shall conform to the ASTM specifications listed in Table 5 or to other specifications if agreed by the purchaser.

8.4.2 Cast fittings shall have the material identification permanently marked on the fitting with raised letters or by using low-stress stamps.

Documents
Document Sharing Hub

Full document details: DIN EN ISO 13705:2007-02

Table 5 — Plug header and return bend materials

Material	ASTM specifications		
	Forged	Wrought	Cast
Carbon steel	A 105	A 234, WPB	A 216, WCB
	A 181, class 60 or 70		
C-1/2Mo	A 182, F1	A 234, WP1	A 217, WC1
1 1/4Cr-1/2Mo	A 182, F11	A 234, WP11	A 217, WC6
2 1/4Cr-1Mo	A 182, F22	A 234, WP22	A 217, WC9
3Cr-1Mo	A 182, F21	—	—
5Cr-1/2Mo	A 182, F5	A 234, WP5	A 217, C5
9Cr-1Mo	A 182, F9	A 234, WP9	A 217, C12
9Cr-1Mo-V	A 182, F91	A 234, WP91	A 217, C12A
18Cr-8Ni Type 304	A 182, F304	A 403, WP304	A 351, CF8
18Cr-8Ni Type 304H	A 182, F304H	A 403, WP304H	A 351, CF8
18Cr-8Ni Type 304L	A 182, F304L	A 403, WP304L	A 351, CF8
16Cr-12Ni-2Mo Type 316	A 182, F316	A 403, WP316	A 351, CF8M
16Cr-12Ni-2Mo Type 316H	A 182, F316H	A 403, WP316H	A 351, CF8M
16Cr-12Ni-2Mo Type 316L	A 182, F316L	A 403, WP316L	A 351, CF3M
18Cr-10Ni-3Mo Type 317	A 182, F317	A 403, WP317	—
18Cr-10Ni-3Mo Type 317L	A 182, F317L	A 403, WP317L	—
18Cr-10Ni-Ti Type 321	A 182, F321	A 403, WP321	—
18Cr-10Ni-Ti Type 321H	A 182, F321H	A 403, WP321H	—
18Cr-10Ni-Nb Type 347	A 182, F347	A 403, WP347	A 351, CF8C
18Cr-10Ni-Nb Type 347H	A 182, F347H	A 403, WP347H	A 351, CF8C
Nickel alloy 800H/800HT[a]	B 564	B 366	A 351, CT-15C
25Cr-20Ni	A 182, F310	A 403, F310	A 351, CK-20 A 351, HK40

[a] Minimum grain size shall be ASTM #5 or coarser.

9 Piping, terminals and manifolds

9.1 General

9.1.1 The minimum corrosion allowance shall be in accordance with 7.1.2.

9.1.2 All flanges shall be welding-neck flanges.

9.1.3 Piping, terminals and manifolds external to the heater enclosure shall be in accordance with ISO 15649.

NOTE For the purposes of this provision, ASME B 31.3[14] is equivalent to ISO 15649.

● **9.1.4** The purchaser shall specify if inspection openings are required; in which case, if agreed by the purchaser, terminal flanges may be used provided that pipe sections are readily removable for inspection access.

Documents
Document Sharing Hub
Full document details: DIN EN ISO 13705:2007-02

9.1.5 Threaded connections shall not be used.

● **9.1.6** The purchaser shall specify if low-point drains and high-point vents are required; in which case they shall be accessible from outside the heater casing.

9.1.7 Manifolds and external piping shall be located so as not to block access for the removal of single tubes or hairpins.

9.1.8 Manifolds inside a header box shall be selected for the same design pressure as the connecting tubes and for a design temperature equal to the maximum fluid operating temperature at that location plus a minimum of 30 °C (55 °F).

9.2 Allowable movement and loads

Heater terminals shall be designed to accept the moments, M, forces, F, and movements shown in Figure 4, and Tables 6 and 7 for tubes and Figure 5 and Tables 8 and 9 for manifolds.

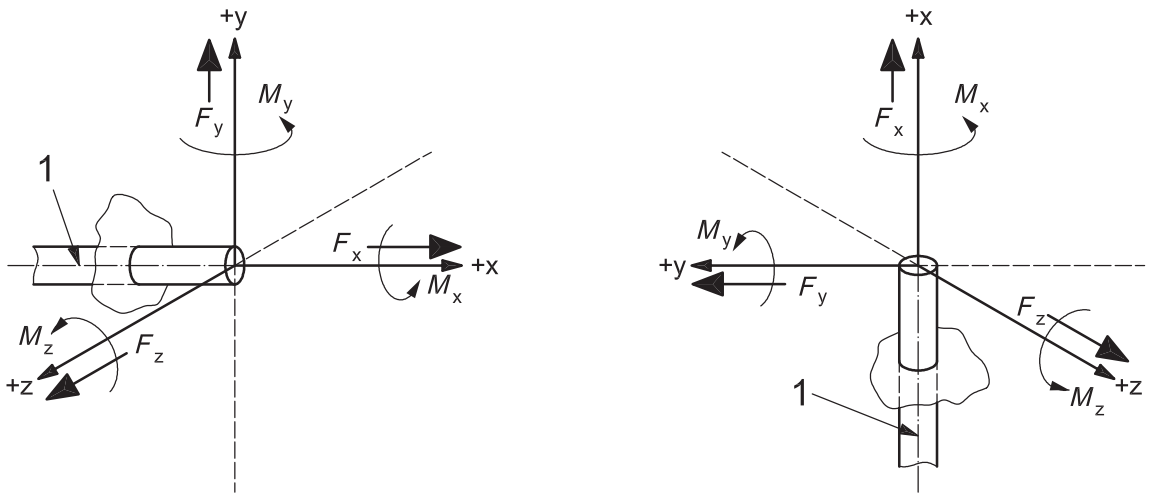

a) Horizontal tubes **b) Vertical tubes**

Key

1 tube centre-line

Figure 4 — Diagram of forces for tubes

Documents
Document Sharing Hub
Full document details: DIN EN ISO 13705:2007-02

Table 6 — Allowable forces and moments for tubes

Pipe size DN (NPS)	Force						Moment					
	F_x		F_y		F_z		M_x		M_y		M_z	
	N	(lbf)	N	(lbf)	N	(lbf)	N·m	(ft·lbf)	N·m	(ft·lbf)	N·m	(ft·lbf)
50 (2)	445	(100)	890	(200)	890	(200)	475	(350)	339	(250)	339	(250)
75 (3)	667	(150)	1 334	(300)	1 334	(300)	610	(450)	475	(350)	475	(350)
100 (4)	890	(200)	1 779	(400)	1 779	(400)	813	(600)	610	(450)	610	(450)
125 (5)	1 001	(225)	2 002	(450)	2 002	(450)	895	(660)	678	(500)	678	(500)
150 (6)	1 112	(250)	2 224	(500)	2 224	(500)	990	(730)	746	(550)	746	(550)
200 (8)	1 334	(300)	2 669	(600)	2 669	(600)	1 166	(860)	881	(650)	881	(650)
250 (10)	1 557	(350)	2 891	(650)	2 891	(650)	1 261	(930)	949	(700)	949	(700)
300 (12)	1 779	(400)	3 114	(700)	3 114	(700)	1 356	(1 000)	1 017	(750)	1 017	(750)

Table 7 — Allowable movements for tubes

Dimensions in millimetres (inches)

Terminals	Allowable movement											
	Horizontal tubes						Vertical tubes					
	Δx		Δy		Δz		Δx		Δy		Δz	
Radiant	a	a	+ 25	(+ 1)	25	(1)	a	a	25	(1)	25	(1)
Convection	a	a	+ 13	(+ 0,5)	13	(0,5)	—	—	—	—	—	—
NOTE Except where noted, the above movements are allowable in both directions (±).												
a To be specified by heater vendor.												

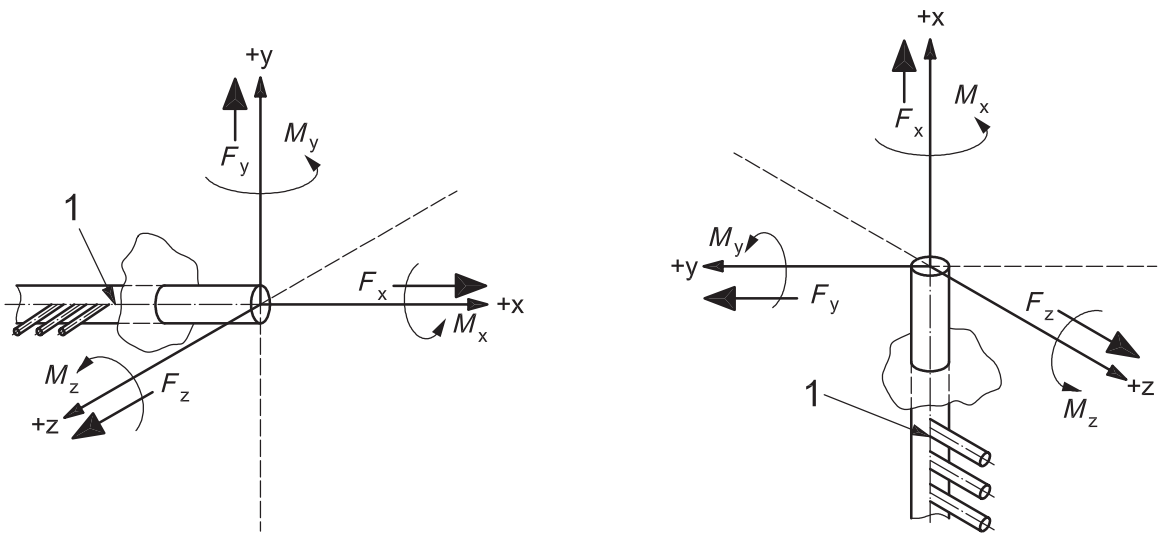

a) Horizontal manifold **b) Vertical manifold**

Key

1 manifold centreline

Figure 5 — Diagram of forces for manifolds

Documents
Document Sharing Hub
Full document details: DIN EN ISO 13705:2007-02

Table 8 — Allowable forces and moments for manifolds

Manifold size DN (NPS)	Force						Moment					
	F_x		F_y		F_z		F_x		F_y		F_z	
	N	(lbf)	N	(lbf)	N	(lbf)	N·m	(ft·lbf)	N·m	(ft·lbf)	N·m	(ft·lbf)
150 (6)	2 224	(500)	4 448	(1 000)	4 448	(1 000)	1 980	(1 460)	1 492	(1 100)	1 492	(1 100)
200 (8)	2 668	(600)	5 338	(1 200)	5 338	(1 200)	2 332	(1 720)	1 762	(1 300)	1 762	(1 300)
250 (10)	3 114	(700)	5 782	(1 300)	5 782	(1 300)	2 522	(1 860)	1 898	(1 400)	1 898	(1 400)
300 (12)	3 558	(800)	6 228	(1 400)	6 228	(1 400)	2 712	(2 000)	2 034	(1 500)	2 034	(1 500)
350 (14)	4 004	(900)	6 672	(1 500)	6 672	(1 500)	2 902	(2 140)	2 170	(1 600)	2 170	(1 600)
400 (16)	4 448	(1 000)	7 117	(1 600)	7 117	(1 600)	3 092	(2 280)	2 305	(1 700)	2 305	(1 700)
450 (18)	4 893	(1 100)	7 562	(1 700)	7 562	(1 700)	3 282	(2 420)	2 441	(1 800)	2 441	(1 800)
500 (20)	5 338	(1 200)	8 006	(1 800)	8 006	(1 800)	3 471	(2 560)	2 576	(1 900)	2 576	(1 900)
600 (24)	5 782	(1 300)	8 451	(1 900)	8 451	(1 900)	3 661	(2 700)	2 712	(2 000)	2 712	(2 000)

Table 9 — Allowable movements for manifolds

Dimensions in millimetres (inches)

Terminals	Allowable movement											
	Horizontal manifolds						Vertical manifolds					
	Δx		Δy		Δz		Δx		Δy		Δz	
Radiant	13	(0,5)	0	(0)	a	a	0	(0)	13	(0,5)	a	A
Convection	13	(0,5)	0	(0)	a	a	—	—	—	—	—	—
NOTE The above movements are allowable in both directions (±).												
a Δz is to be specified by heater vendor.												

9.3 Materials

External crossover piping shall be of the same metallurgy as the preceding heater tube; internal crossover piping shall be of the same metallurgy as the radiant tubes.

10 Tube supports

10.1 General

10.1.1 The design temperature for tube supports and guides exposed to flue gas shall be based on design operation of the furnace as follows:

a) for the radiant and shock sections and outside the refractory, the flue-gas temperature to which the supports are exposed plus 100 °C (180 °F); the minimum design temperature shall be 870 °C (1 600 °F);

b) for the convection section, the temperature of the flue gas in contact with the support plus 55 °C (100 °F);

Documents
Document Sharing Hub

Full document details: DIN EN ISO 13705:2007-02

c) maximum flue-gas temperature gradient across a single convection intermediate tube support shall be 222 °C (400 °F);

d) where the radiant tube-support castings are shielded behind a row of tubes, the bridgewall temperature may be used.

No credit shall be taken for the shielding effect of refractory coatings on intermediate supports or guides.

10.1.2 Guides, horizontal radiant-section intermediate tube supports and top supports for vertical radiant tubes shall be designed to permit their replacement without tube removal and with minimum refractory repair.

10.1.3 The unsupported length of horizontal tubes shall not exceed 35 times the outside diameter or 6 m (20 ft), whichever is less.

10.1.4 The minimum corrosion allowance of each side for all exposed surfaces of each tube support and guide contacting flue gases shall be 1,3 mm (0,05 in) for austenitic materials and 2,5 mm (0,10 in) for ferritic materials.

10.1.5 The following shall apply to end-tube sheets for tubes with external headers.

— Tube sheets shall be structural plate. If the tube-sheet design temperature exceeds 425 °C (800 °F), alloy materials shall be used.

— Minimum thickness of tube sheets shall be 12 mm (0,5 in).

— Tube sheets shall be insulated on the flue-gas side with a castable having a minimum thickness of 75 mm (3 in) for the convection section and 125 mm (5 in) for the radiant section. (Anchors shall be made from austenitic stainless steel or nickel alloy as listed in Table 11.)

— Sleeves with an inside diameter at least 12 mm (0,5 in) greater than the tube or the extended-surface outside diameter shall be welded to the tube sheet at each tube hole, to prevent the refractory from being damaged by the tubes. The sleeve material shall be austenitic stainless steel.

10.1.6 The following shall apply to the supporting of extended-surface tubes.

— Intermediate supports shall be designed to prevent mechanical damage to the extended surface and shall permit easy removal and insertion of the tubes without binding.

— For studded tubes, a minimum of three rows of studs shall rest on each support.

— For finned tubes, at least five fins shall rest on each support.

10.2 Loads and allowable stress

10.2.1 Tube-support loads shall be determined as follows.

— Loads shall be determined in accordance with acceptable procedures for supporting continuous beams on multiple supports (e.g. AISC). Friction loads shall be based on a friction coefficient of not less than 0,30.

— Friction loads shall be based on all tubes expanding and contracting in the same direction. Loads shall not be considered to be cancelled or reduced due to movement of tubes in opposite directions.

Documents
Document Sharing Hub

Full document details: DIN EN ISO 13705:2007-02

10.2.2 Tube-support maximum allowable stresses at design temperature shall not exceed the following:

a) dead-load stress:

1) one-third of the ultimate tensile strength,

2) two-thirds of the yield strength (0,2 % offset),

3) 50 % of the average stress required to produce 1 % creep in 10 000 h,

4) 50 % of the average stress required to produce rupture in 10 000 h;

b) dead-load plus frictional stress:

1) one-third of the ultimate tensile strength,

2) two-thirds of the yield strength (0,2 % offset),

3) average stress required to produce 1 % creep in 10 000 h,

4) average stress required to produce rupture in 10 000 h.

10.2.3 For castings, the allowable stress value shall be multiplied by 0,8 to determine the required casting thickness.

10.2.4 Stress data shall be as presented in Annex D.

10.3 Materials

10.3.1 Tube-support materials shall be selected for maximum design temperatures as shown in Table 10. Other materials and alternative specifications shall be subject to the approval of the purchaser.

● **10.3.2** If the tube-support design temperature exceeds 650 °C (1 200 °F) and the fuel contains more than 100 mg/kg total vanadium and sodium, the supports shall exhibit one of the following design details, as specified or agreed by the purchaser:

a) constructed of stabilized, 50Cr-50Ni metallurgy, without any coating;

b) for radiant or accessible supports only, covered with 50 mm (2 in) of castable refractory having a minimum density of 2 080 kg/m^3 (130 lb/ft^3).

Table 10 — Maximum design temperatures for tube-support materials

Material	ASTM specification		Maximum design temperature	
	Casting	Plate	°C	(°F)
Carbon steel	A 216 Gr WCB	A 283 Gr C	425	(800)
2 1/4Cr-1Mo	A 217 Gr WC 9	A 387 Gr 22, Class 1	650	(1 200)
5Cr-1/2Mo	A 217 Gr C5	A 387 Gr 5, Class 1	650	(1 200)
19Cr-9Ni	A 297 Gr HF	A 240, Type 304H	815	(1 500)
25Cr-12Ni	—	A 240, Type 309H	870	(1 600)
25Cr-12Ni	A 447 Type II	—	980	(1 800)
25Cr-20Ni	—	A 240, Type 310H	870	(1 600)
25Cr-20Ni	A 351 Gr HK40	—	1 090	(2 000)
50Cr-50Ni-Nb	A 560 Gr 50Cr-50Ni	—	980	(1 800)
For exposed radiant and shield-section tube supports, the material shall be 25Cr-12Ni or higher alloy.				

AVA Documents
Document Sharing Hub

Full document details: DIN EN ISO 13705:2007-02

11 Refractories and insulation

11.1 General

11.1.1 Selection of refractory and insulating materials is at least partially based on the anticipated operating temperature and the classification temperature for the material. The following temperature definitions are to be used when making refractory selections.

— Rated temperature is a classification temperature for refractory materials as defined by each refractory manufacturer, in accordance with specifications such as ASTM. Manufacturers most often use the terms “service temperature”, “maximum temperature rating” and “classification temperature” to describe the rated temperature of the refractory product.

— Design temperature is a classification temperature used to make refractory selections. It is the calculated hot-face temperature plus the required design margin, and the calculated interface temperature plus that same design margin if there is more than a single layer of refractory. The selected design temperature for each layer of refractory shall be equal to or less than the stated continuous-use limit for the refractory product.

— Continuous-use limit temperature is the manufacturer’s stated temperature limit at which the refractory product does not suffer degradation during extended use at that temperature. It is also sometimes referred to as the "recommended use limit".

— Hot-face temperature is the calculated temperature at the refractory surface in contact with the flue gas or the heated combustion air.

— Interface temperature is the calculated temperature at the intersection of each different layer of refractory material if multilayer or multi-component refractory construction is used.

11.1.2 The temperature of the outside casing of the radiant and convection sections and hot ductwork shall not exceed 82 °C (180 °F) at an ambient temperature of 27 °C (80 °F) with zero wind velocity. Radiant floors shall not exceed 90 °C (195 °F).

11.1.3 Walls, arches and floors shall be designed to allow for proper expansion of all parts. Where multilayer or multi-component linings are used, joints shall not be continuous through the lining.

11.1.4 Each layer of refractory shall be suitable for a design temperature at least 165 °C (300 °F) above the calculated hot-face or calculated interface temperature. The minimum design temperature for refractories used in the radiant and shield sections of the heater is 980 °C (1 800 °F).

11.1.5 The floor hot surface shall be a 63 mm (2,5 in) thick layer of high-duty fireclay brick or a 75 mm (3 in) thick layer of castable with a 1 370 °C (2 500 °F) service temperature and a minimum cold crush strength of 3 450 kN/m^2 (500 psi) after drying at 110 °C (230 °F).

11.1.6 Burner blocks shall be suitable for a service temperature of at least 1 650 °C (3 000 °F).

11.1.7 Target walls with flame impingement on both sides shall be constructed of high-duty firebrick with at least a 1 540 °C (2 800 °F) rating. Bricks shall be laid dry or with mortared joints. Expansion joints shall be packed with ceramic fibre strips having a rated temperature not less than 1 540 °C (2 800 °F).

11.1.8 Target walls with flame impingement on one side shall be of brick or of plastic refractory with a rated temperature of at least 1 540 °C (2 800 °F). Either may be backed by a castable or ceramic fibreboard.

11.1.9 Expansion joints shall be provided around burner blocks, brick and pre-fired shapes.

11.1.10 Access doors shall be protected from direct radiation by a refractory system of at least the same thermal rating and resistance as the adjacent wall lining.

11.1.11 Refractory anchors are not mandatory for floor castable, unless required for shipping considerations.

Documents
Document Sharing Hub
Full document details: DIN EN ISO 13705:2007-02

11.1.12 Maximum temperatures for anchor tips are listed in Table 11.

Table 11 — Maximum temperatures for anchor tips

Anchor material	Maximum anchor temperature	
	°C	(°F)
Carbon steel	455	850
TP 304 stainless steel	760	1 400
TP 316 stainless steel	760	1 400
TP 309 stainless steel	815	1 500
TP 310 stainless steel	927	1 700
TP 330 stainless steel	1 038	1 900
Alloy 601 (UNS N06601)	1 093	2 000
Ceramic studs and washers	> 1 093	> 2 000

11.2 Brick and tile construction

11.2.1 Brick construction may be used for gravity walls and floors or as hot-face layers.

11.2.2 Radiant chamber walls of gravity construction shall not exceed 7,3 m (24 ft) in height and shall be at least high-duty fireclay brick. The base width shall be a minimum of 8 % of wall height. The height-to-width ratio of each wall section shall not exceed 5 to 1. The walls shall be self-supporting and the base shall rest on the steel wall, not on another refractory.

11.2.3 Gravity walls shall be of mortared construction. The mortar shall be non-slagging, air-setting, chemically compatible with adjacent refractory, including at the rated temperature of the brick.

11.2.4 Vertical expansion joints shall be provided at gravity-wall ends and required intermediate locations. All expansion joints shall be kept open and free to move. If the joint is formed with lapped brick, no mortar shall be used, that is, it shall be a dry joint.

11.2.5 Floor brick shall not be mortared. A 13 mm (0,5 in) gap for expansion shall be provided at 1,8 m (6 ft) intervals. This gap may be packed with fibrous refractory material of similar rated temperature, in strip, not loose bulk, form.

11.2.6 Minimum service temperature for a hot-face brick layer shall be 1 430 °C (2 600 °F) on walls with expected flame impingement and 1 260 °C (2 300 °F) for other exposed-wall applications. Minimum service temperature for shielded walls shall be 1 095 °C (2 000 °F).

11.2.7 All brick linings on vertical flat casing shall be tied back to, and supported by, the structural steel framing members. All tie members shall be austenitic alloy material, except that pipe supports located in the backup layer may be carbon steel. At least 15 % of the bricks shall be tied back. It is not necessary for the brick lining on the cylindrical casing to be tied back if the radius of curvature of the casing keys the bricks.

11.2.8 Brick linings shall be supported by metal support shelves (lintels) attached to the casing on vertical centres not to exceed 1,8 m (6 ft). Support shelves shall be slotted to provide for differential thermal expansion. Shelf material is defined by the calculated service temperature; carbon steel is satisfactory up to 370 °C (700 °F).

11.2.9 Expansion joints shall be provided in both vertical and horizontal directions of the walls, at wall edges and about burner tiles, doors and sleeved penetrations.

AVA Documents
Document Sharing Hub

Full document details: DIN EN ISO 13705:2007-02

11.3 Castable construction

11.3.1 Hydraulic-setting castables are suitable as refractory lining material for all areas of fired heaters. Only premixed refractory products shall be used and the equivalent of a 1:2:4 volumetric mix of lumnite-haydite-vermiculite product shall be limited to use at a design temperature of 1 040 °C (1900 °F). If the lumnite-haydite-vermiculite equivalent is used as a hot-face material, it shall be used only in clean-fuel applications and shall be limited to a maximum thickness of 200 mm (8 in) on arch and wall areas.

11.3.2 For dual-layer castable construction, the hot-face layer shall be a minimum of 75 mm (3 in) thick. Except for the floor, the anchoring systems shall provide independent support for each layer.

11.3.3 Anchoring penetration shall be not less than 70 % of the individual layer being anchored for castable thickness greater than 50 mm (2 in). The anchor shall not be closer than 12 mm (0,5 in) to the hot-face.

11.3.4 The anchoring spacing shall be a maximum of three times the total lining thickness, but shall not exceed 300 mm (12 in) on a square pattern for walls and 225 mm (9 in) on a square pattern for arches. The anchor orientation shall be varied to avoid creating continuous shear planes.

11.3.5 Anchors for total castable thickness up to 150 mm (6 in) shall be at least 5 mm (3/16 in) in diameter. For greater castable thickness, the anchors shall be at least 6,3 mm (1/4 in) in diameter.

11.3.6 Castable linings in header boxes, breechings and lined flue-gas ducts and stacks shall not be less than 50 mm (2 in) thick.

● **11.3.7** In castable linings up to 50 mm (2 in) thick, fencing or wire mesh shall be used for anchoring the lining. The purchaser shall specify or agree if carbon steel material is acceptable.

11.3.8 Metallic fibre may be added for reinforcement only in castables of density 880 kg/m^3 (55 lb/ft^3) or higher. Metallic fibres shall be limited to no more than 3 % mass fraction of the dry mixture.

11.3.9 Low iron content (maximum 1,5 % mass fraction) materials shall be used when the total heavy metals content of the fuel exceeds 100 mg/kg (100 ppm by mass).

11.3.10 Castables with low iron content, or heavy-weight castables, shall be used on exposed hot-face walls if the total heavy-metals content, including sodium, within the fuel exceeds 250 mg/kg (250 ppm by mass). Heavy-weight castables shall have a minimum density of 1 800 kg/m^3 (110 lb/ft^3) with an Al_2O_3 content of not less than 40 %. In aggregate, the Al_2O_3 content shall be not less than 40 % and the SiO_2 content shall not exceed 35 %.

11.3.11 Hydraulic-setting castables, in particular light-weight and medium-weight insulating castables, are susceptible to the development of alkaline hydrolysis (carbonization) placed under high ambient temperatures and/or high humidity conditions shortly after placement. See 16.5.8 regarding placement and curing.

11.4 Ceramic-fibre construction

● **11.4.1** If specified or agreed by the purchaser, ceramic-fibre in layered or modular construction may be used in all heater areas except stacks, ducts and floors.

11.4.2 The hot-face of layered ceramic-fibre blanket installations shall be a minimum of 25 mm (1 in) thick, 128 kg/m^3 (8 lb/ft^3) density, needled material. Ceramic fibreboard, if applied as a hot-face layer, shall not be less than 38 mm (1,5 in) thick nor have a density less than 240 kg/m^3 (15 lb/ft^3). Backup layer(s) of ceramic-fibre blanket shall be needled material with a minimum density of 96 kg/m^3 (6 lb/ft^3). The size of the ceramic fibreboard, if used as hot-face layer, shall be limited to maximum dimensions of 600 mm × 600 mm (24 in × 24 in) if temperatures of the flue gases are below 1 100 °C (2 000 °F) and 450 mm × 450 mm (18 in × 18 in) if temperatures of the flue gases exceed 1 100 °C (2 000 °F).

11.4.3 Any layer of ceramic fibre shall be suitable for a service temperature at least 280 °C (500 °F) above its calculated hot-face temperature.

Documents
Document Sharing Hub
Full document details: DIN EN ISO 13705:2007-02

11.4.4 The hot-face layer of a ceramic-fibre blanket system shall be anchored at a maximum distance of 75 mm (3 in) from all edges.

11.4.5 The anchor spacing for arches shall not exceed the following rectangular pattern: 150 mm × 225 mm (6 in × 9 in) for 300 mm (12 in) wide blankets; 225 mm × 225 mm (9 in × 9 in) for 600 mm (24 in) wide blankets; 225 mm × 250 mm (9 in × 10 in) for 900 mm (36 in) wide blankets; and 225 mm × 270 mm (9 in × 10,5 in) for 1 200 mm (48 in) wide blankets.

11.4.6 The anchor spacing for walls shall not exceed the following rectangular pattern: 150 mm × 225 mm (6 in × 9 in) for 300 mm (12 in) wide blankets; 225 mm × 300 mm (9 in × 12 in) for 600 mm (24 in) wide blankets; and 270 mm × 300 mm (10,5 in × 12 in) for 1 200 mm (48 in) wide blankets.

11.4.7 Metallic anchor parts that are not shielded by tubes shall be completely wrapped with ceramic-fibre patches or be protected by ceramic retainer cups filled with mouldable ceramic fibre.

11.4.8 Ceramic-fibre blanket shall not be used as the hot-face layer if flue-gas velocities are in excess of 12 m/s (40 ft/s). Wet-blanket, ceramic fibreboard, or ceramic-fibre modules shall be used on hot-face layers with velocities greater than 12 m/s (40 ft/s) but less than 24 m/s (80 ft/s). Hot-face refractory with velocities greater than 24 m/s (80 ft/s) shall have castable or external lining.

11.4.9 Ceramic-fibre blanket shall be installed with its longest dimension in the direction of gas flow. The hot-face layer of blanket shall be constructed with all joints overlapped. Overlaps shall be in the direction of gas flow. Hot-face layers of ceramic fibreboard shall be constructed with tight butt joints.

11.4.10 Ceramic-fibre blanket used in backup layers shall be installed with butt joints with at least 25 mm (1 in) compression on the joints. All joints in successive layers of blanket shall be staggered.

11.4.11 Ceramic-fibre blanket modules shall be installed in soldier-course (with batten strips) patterns. Parquet pattern may be used only on arches.

11.4.12 Module systems shall be installed so that joints at each edge are compressed to avoid gaps due to shrinkage.

11.4.13 Modules applied in arches shall be designed so that anchorage is provided over at least 80 % of the module width.

11.4.14 Anchors shall be attached to the casing before modules are installed.

11.4.15 Anchor assembly shall be located in the module at a maximum distance of 50 mm (2 in) from the module cold face.

11.4.16 Module internal hardware shall be austenitic stainless steel or nickel alloy (see Table 11).

● **11.4.17** If ceramic-fibre construction is used with fuels having a sulfur content exceeding 10 mg/kg (10 ppm by mass), the casing shall have an internal protective coating, specified or agreed by the purchaser, to prevent corrosion. The protective coating shall be rated for a 175 °C (350 °F) service temperature.

11.4.18 A vapour barrier of austenitic stainless steel foil shall be provided if the fuel sulfur content exceeds 500 mg/kg (500 ppm by mass). The vapour barrier shall be located so that the exposure temperature is at least 55 °C (100 °F) above the calculated acid dew point for all operating cases. Vapour-barrier edges shall be overlapped by at least 175 mm (7 in); edges and punctures shall be sealed.

11.4.19 Ceramic-fibre systems shall not be applied for services where the total heavy-metals content in the fuel exceeds 100 mg/kg (100 ppm by mass).

11.4.20 Ceramic fibre shall not be used in convection sections where sootblowers, steam lances or waterwash facilities are initially provided.

AVA Documents
Document Sharing Hub

Full document details: DIN EN ISO 13705:2007-02

11.4.21 Anchors shall be installed before applying protective coating to the casing. The coating shall cover the anchors so that uncoated parts are above the acid dew-point temperature.

11.5 Multi-component lining construction

11.5.1 Castable layers shall have a minimum thickness of 75 mm (3 in).

11.5.2 The anchoring system shall provide retention and support for each component layer.

11.5.3 Anchor types and installation for individual lining components shall meet the applicable requirements of 11.2, 11.3 and 11.4.

11.5.4 The material used in any layer shall be suitable for service temperatures in accordance with 11.1.4 and 11.4.3.

11.5.5 Brick may be used for hot-face service or as a backup layer if the hot-face layer is brick.

11.5.6 Block insulation shall be made of calcium silicate or mineral-wool fibre, with a minimum service-temperature rating of 938 °C (1 800 °F). Block insulation shall be used only as a backup material, but shall not be used if the fuel sulfur content exceeds 1 % mass fraction in liquid fuel or 100 mg/kg hydrogen sulfide in gas fuel. Block insulation shall not be used as backup material in floor construction.

11.5.7 If insulating block or ceramic fibre is used as backup insulation, the casing shall have a protective coating if the fuel sulfur content exceeds 10 mg/kg. The protective coating shall be rated for 175 °C (350 °F) service temperature.

11.5.8 If used as backup for castable, block insulation or ceramic-fibre blanket shall be sealed to prevent water migration from the castable.

11.5.9 The minimum density of insulating block and ceramic-fibre blanket used as backup materials shall be 130 kg/m^3 (8 lb/ft^3).

11.6 Materials

11.6.1 Materials shall conform to the following ASTM specifications or equivalent:

a) fireclay brick, ASTM C 27;

b) insulating firebrick, ASTM C 155;

c) castable refractory, ASTM C 401, Class N, O, P, Q or R;

d) vermiculite sieve analysis, ASTM C 332, Group I density;

e) insulating block (mineral-slag wool, neutral pH), ASTM C 612 CL5;

f) haydite, ASTM C 332 Group II:

   1) poured application: Fine Aggregate No. 4,

   2) gunned application: combined fine and coarse 10 mm (3/8 in) to Fine Aggregate No. 0.

11.6.2 The following materials shall have a composition as follows:

a) lumnite or calcium aluminate cement: the mass fraction of Al_2O_3 shall be at least 35 %;

b) ceramic fibre: the mass fraction of Al_2O_3 shall be at least 43 % and the remainder shall be primarily SiO_2 or ZrO_2.

Documents
Document Sharing Hub

Full document details: DIN EN ISO 13705:2007-02

12 Structures and appurtenances

12.1 General

- **12.1.1** The purchaser shall specify or agree the structural design code. Structures shall comply with the structural design code.

12.1.2 Minimum design loads for wind and earthquake shall conform to the structural design code.

12.1.3 Platform live loads shall be in accordance with the structural design code.

12.1.4 Structures and appurtenances shall be designed for all applicable load conditions expected during shipment, erection and operation. Cold-weather conditions shall be considered, particularly when the furnace is not in operation. These load conditions shall include, but are not limited to, dead load, wind load, earthquake load, live load and thermal load.

12.1.5 Design metal temperature of structures and appurtenances shall be the calculated metal temperature plus 55 °C (100 °F), based on the maximum flue-gas temperature expected for all operating modes with an ambient temperature of 27 °C (80 °F) in still air.

12.1.6 The effect of elevated design temperature on yield strength and modulus of elasticity shall be taken into account (see Table 12).

12.1.7 The material of the structures and appurtenances shall be adequate for all load conditions at the lowest specified ambient temperature when the furnace is not in operation.

12.2 Structures

12.2.1 All loads from the tubes and headers shall be supported by the structural steel and shall not be transmitted into the refractory.

12.2.2 Structural steel shall be designed to permit lateral and vertical expansion of all heater parts.

12.2.3 Heater casing shall be plate of a minimum thickness of 5 mm (3/16 in), which shall be reinforced against warping. Casing, if calculated to resist buckling stresses, shall have a minimum thickness of 6 mm (1/4 in). Floor and radiant roof plates shall have a minimum thickness of 6 mm (1/4 in).

12.2.4 Heater-casing plate shall be seal-welded externally to prevent air and water infiltration.

- **12.2.5** The heater structure shall be capable of supporting ladders, stairs and platforms in locations where installed or where specified by the purchaser for future use.

12.2.6 Flat-roof design shall allow for runoff of rainwater. This can be accomplished by arrangement of structural members and drain openings, by sloping the roof or with a secondary roof for weather protection. If pitched roofs are provided for weather protection, eaves and gables shall prevent the entry of windblown rain.

- **12.2.7** If fireproofing is specified by the purchaser, the main structural columns of the heater from the baseplate to the floor level plus the main floor beams shall be designed for the addition of 50 mm (2 in) of fireproofing.

12.2.8 Heaters with horizontal tubes that have return bends inside the firebox shall have removable end panels or panels in the sidewalls to provide access to the return-bend welds.

12.2.9 Duct structural systems shall support ductwork independent of expansion joints during operation, when idle or with duct sections removed.

12.2.10 The casing shall be reinforced at the burner mounting to maintain the burner alignment during operation. Gaskets shall be provided at each bolted burner mounting flange connection to the heater.

Documents
Document Sharing Hub

Full document details: DIN EN ISO 13705:2007-02

12.3 Header boxes, doors and ports

12.3.1 Header boxes

12.3.1.1 Each header box shall allow for the total tube expansion. A minimum clearance of 75 mm (3 in) shall be provided between the header box door refractory and the header in the hot position.

● **12.3.1.2** Header boxes enclosing plug headers shall have hinged doors or bolted end panels as specified by the purchaser.

12.3.1.3 Header boxes, including doors, shall be of 5 mm (3/16 in) minimum steel plate reinforced against warping. Header boxes shall be removable.

● **12.3.1.4** If specified by the purchaser, to minimize flue-gas bypassing, horizontal partitions shall be provided in convection-section header boxes at a spacing no greater than 1,5 m (5 ft).

12.3.1.5 Gaskets shall be used in all header-box joints to achieve airtightness. Where terminals and crossovers protrude through the header box, the opening around the coil shall be sealed to minimize leakage.

12.3.2 Doors and ports

12.3.2.1 Two access doors having a minimum clear opening of 600 mm × 600 mm (24 in × 24 in) shall be provided for each radiant chamber of a box or cabin heater.

12.3.2.2 One access door having a minimum clear opening of 450 mm × 450 mm (18 in × 18 in) shall be provided in the floor for vertical cylindrical heaters. A bolted and gasketed access door shall also be provided in any air plenum below the floor accessway. Where space is not available, access via a burner port is acceptable.

12.3.2.3 One access door having a minimum clear opening of 600 mm × 600 mm (24 in × 24 in), or 600 mm (24 in) in diameter, shall be provided in the stack or breeching for access to the damper and convection sections.

12.3.2.4 One tube-removal door having a minimum clear opening of 450 mm × 600 mm (18 in × 24 in) shall be provided in the arch of each radiant chamber of vertical tube heaters.

12.3.2.5 Observation doors and ports shall be provided for viewing all radiant tubes and all burner flames for proper operation and for light-off.

12.3.2.6 Access doors having a minimum clear opening of 600 mm × 600 mm (24 in × 24 in) shall be provided to ducts, plenums and at all duct connections to air preheaters and control dampers.

12.4 Ladders, platforms and stairways

12.4.1 Platforms shall be provided as follows:

a) at burner and burner controls that are not accessible from grade;

b) at both ends of the convection section for maintenance purposes;

c) at damper and sootblower locations for maintenance and operation purposes;

d) at all observation ports and firebox-access doors not accessible from grade;

e) at auxiliary equipment, such as steam drums, fans, drivers and air preheaters as required for operating and maintenance purposes;

f) at all areas necessary to meet the requirements of 15.5.

Documents
Document Sharing Hub

Full document details: DIN EN ISO 13705:2007-02

12.4.2 Vertical cylindrical heaters with shell diameters greater than 3 m (10 ft) shall have a full circular platform at the floor level. Individual ladders and platforms to each observation door may be used if shell diameters are 3 m (10 feet) or less.

12.4.3 Platforms shall have a minimum clear width as follows:

a) operating platforms: 900 mm (3 ft);

b) maintenance platforms: 900 mm (3 ft);

c) walkways: 750 mm (2,5 ft).

● **12.4.4** Platform decking shall have a minimum thickness of 6 mm (1/4 in) checkered plate or 25 mm × 5 mm (1 in × 3/16 in) open grating, as specified by the purchaser. Stair treads shall be open grating with a checkered plate nosing.

12.4.5 Dual access shall be provided to each operating platform, except if the individual platform length is less than 6 m (20 ft).

12.4.6 An intermediate landing shall be provided if the vertical rise exceeds 9 m (30 ft) for ladders and 4,5 m (15 ft) for stairways.

12.4.7 Ladders shall be caged from a point 2,3 m (7,5 ft) above grade or any platform. A self-closing safety gate shall be provided for all ladders serving platforms and landings. Ladders shall be arranged for side step-off; step-through ladders shall not be used unless specified or agreed by the purchaser.

12.4.8 Stairs shall have a minimum width of 750 mm (2,5 ft), a minimum tread width of 240 mm (9,5 in), and a maximum riser of 200 mm (8 in). The slope of the stairway shall not exceed a 9 (vertical) to 12 (horizontal) ratio.

12.4.9 Headroom over platforms, walkways and stairways shall be a minimum of 2,1 m (7 ft).

12.4.10 Handrails shall be provided on all platforms, walkways and stairways.

12.4.11 Handrails, ladders and platforms shall be arranged so as not to interfere with tube handling. Where interference exists, removable sections shall be provided.

12.5 Materials

● **12.5.1** Materials for service at design ambient temperatures below – 30 °C (– 20 °F) shall be as specified by the purchaser. For ambient temperatures below – 20 °C (– 5 °F), special low-temperature steels shall be considered.

12.5.2 The mechanical properties and the chemical composition of structural, alloy or stainless steels shall comply with ISO Standard requirements or their equivalent.

12.5.3 For metal temperatures lower than 425 °C (800 °F), stacks, ducts and breeching shall be constructed from one of the following structural grades of steel: EN 10025-2:2004, Annex A (grades Fe360, Fe430, Fe510), ASTM (A 36, A 242, A 572), or their equivalent.

12.5.4 If metal temperatures exceed 425 °C (800 °F), stainless or alloy steels shall be used.

12.5.5 The mechanical properties of the steels at temperatures between 0 °C (32 °F) and 425 °C (800 °F) shall be determined according to the values given in Table 12.

12.5.6 If the minimum service temperature is – 18 °C (0 °F) or higher, bolting material shall be in accordance with ASTM A 307, ASTM A 325, ASTM A 193-B7 or equivalent. Below – 18 °C (0 °F), A 193-B7 bolts with A 194-2H nuts, A 320-L7 bolting or equivalent shall be used. No welding is permitted on A 320-L7 or A 193-B7 materials.

AVA Documents
Document Sharing Hub

Full document details: DIN EN ISO 13705:2007-02

Table 12 — Minimum yield strength, F_y, and modulus of elasticity, E, for structural steel

	EN 10025-2, Annex A: Fe 360		EN 10025-2, Annex A: Fe 430		EN 10025-2, Annex A: Fe 510		ASTM A 36		ASTM A 242		ASTM A 572 grade 50	
T	F_y	E	F_y	E	F_y	E	F_y	E	F_y	E	F_y	E
°C (°F)	MN/m² (psi × 10³)	GN/m² (psi × 10⁶)	MN/m² (psi × 10³)	GN/m² (psi × 10⁶)	MN/m² (psi × 10³)	GN/m² (psi × 10⁶)	MN/m² (psi × 10³)	GN/m² (psi × 10⁶)	MN/m² (psi × 10³)	GN/m² (psi × 10⁶)	MN/m² (psi × 10³)	GN/m² (psi × 10⁶)
20 (70)	235 (34,1)	210 (30,5)	275 (39,9)	210 (30,5)	355 (51,5)	210 (30,5)	248 (36,0)	200 (29,0)	290 (42,1)	192 (27,8)	344 (50,0)	207 (30,0)
200 (390)	207 (30,0)	202 (29,3)	242 (35,1)	202 (29,3)	312 (45,3)	202 (29,3)	200 (29,0)	193 (28,0)	261 (37,9)	186 (27,0)	296 (42,9)	200 (29,0)
250 (480)	196 (28,4)	198 (28,7)	229 (33,2)	198 (28,7)	295 (42,8)	198 (28,7)	192 (27,8)	189 (27,4)	254 (36,8)	182 (26,4)	283 (41,1)	196 (28,4)
300 (570)	183 (26,5)	192 (27,8)	214 (31,0)	192 (27,8)	276 (40,0)	192 (27,8)	183 (26,5)	185 (26,8)	246 (35,7)	177 (25,7)	271 (39,4)	191 (27,7)
350 (660)	169 (24,5)	185 (26,8)	197 (28,6)	185 (26,8)	255 (37,0)	185 (26,8)	175 (25,4)	180 (26,1)	238 (34,5)	171 (24,8)	264 (38,3)	186 (27,0)
425 (800)	161 (23,4)	173 (25,1)	178 (25,8)	173 (25,1)	230 (33,4)	173 (25,1)	161 (23,4)	176 (25,5)	229 (33,2)	161 (23,4)	248 (36,0)	173 (25,1)

13 Stacks, ducts and breeching

13.1 General

13.1.1 Clause 13 applies to the structural design of ducts, breeching and self-supporting vertical steel stacks of circular or conical section.

● **13.1.2** The design of stacks, ducts and breechings shall be in accordance with the applicable provisions of the codes and standards specified by the purchaser and, as a minimum requirement, shall comply with Clause 13.

13.2 Design considerations

13.2.1 Stacks shall be self-supporting and shall be bolted to their supporting structure.

● **13.2.2** Stack intermediate construction shall be performed with full-penetration welding or, if agreed by the purchaser, shall be bolted.

13.2.3 Breeching and ducting shall be of welded or bolted construction.

13.2.4 External attachments to stacks shall be seal-welded.

13.2.5 Stacks, ducts and breeching mounted on concrete shall be designed to prevent concrete temperatures in excess of 150 °C (300 °F).

13.2.6 Connections between stacks and flue-gas ducts shall not be welded.

13.2.7 A corrosion-resistant metal cap should be provided at the top of the stack lining refractory to protect its horizontal surface from the weather.

Documents
Document Sharing Hub
Full document details: DIN EN ISO 13705:2007-02

13.2.8 Linings can be required in steel stacks for one or more of the following purposes:

a) fire protection;

b) to protect structural steel from gases of excessively high temperature;

c) corrosion protection;

d) to maintain the flue-gas temperature at least 20 °C (35 °F) above the acid dew point;

e) to reduce potential for aerodynamic instability.

13.2.9 The suitability of specialist linings other than refractory should be discussed with the manufacturers but consideration should be given to their strength, flexibility, thermal properties and resistance to chemical attack.

13.2.10 Castable linings shall be secured to stacks, ducts and breeching by suitable anchorage (see 11.3.7).

13.2.11 All openings and connections on the stack, duct or breeching shall be sealed to prevent air or flue-gas leakage.

13.2.12 Breeching shall have a minimum clear distance beyond the last (present or future) convection row of 0,8 m (2,5 ft) for access and flue-gas distribution. At least one take-off shall be provided every 12 m (40 ft) of convection-section tube length.

13.2.13 Stacks, ducts and breeching shall be designed for all applicable load conditions expected during shipment, erection and operation. Snow and ice shall be considered, particularly when the furnace is not in operation. These load conditions shall include, but not be limited to, dead load, wind load, earthquake load, live load and thermal load.

13.2.14 The combination of loads that could occur simultaneously to create the maximum load condition shall be the design load, but in no case shall individual loads create stresses that exceed those allowed by 13.4. Wind and earthquake loads shall not be considered as acting simultaneously.

13.2.15 The minimum thickness of the stack shell plate shall be 6 mm (1/4 in), including corrosion allowance. The minimum corrosion allowance shall be 1,6 mm (1/16 in) for lined stacks and 3,2 mm (1/8 in) for unlined stacks.

13.2.16 The minimum number of anchor bolts for any stack shall be eight.

13.2.17 Lifting lugs on stacks, if required, shall be designed for the lifting load as the stack is raised from a horizontal to a vertical position.

13.2.18 Design metal temperature of stacks, ducts and breeching shall be the calculated metal temperature plus 50 °C (90 °F), based on the maximum flue-gas temperature expected for all operating modes with an ambient temperature of 27 °C (80 °F) with zero wind velocity.

13.2.19 The minimum thickness of breeching and duct plate shall be 5 mm (3/16 in).

13.2.20 Ducts and breeching shall be stiffened to prevent excessive warpage and deflection. Deflection of castable refractory lined ducts and breeching shall be limited to 1/360th of the span. Deflection of other ducts and breeching shall be limited to 1/240th of the span.

13.3 Design methods

Where no specific requirements are given by the purchaser, one of the methods given in Clause H.2 or H.3 should be adopted.

Documents
Document Sharing Hub

Full document details: DIN EN ISO 13705:2007-02

13.4 Static design

13.4.1 All stacks shall be designed as cantilever beam columns.

13.4.2 Linings shall not be considered as contributing to the strength of the stack, duct or breeching.

13.4.3 Discontinuities in the stack shell plate, such as conical-to-cylindrical junctions and non-circular transitions, shall be designed so that the combined membrane and bending stresses in the stack shell or stiffening rings do not exceed 90 % of the minimum yield strength of the respective materials at design temperature.

13.4.4 Openings cut into the stack shall be limited in size to a clear width no greater than two-thirds of the stack diameter. For two openings opposite each other, each chord shall not exceed the stack radius. Openings shall be reinforced to fully restore the required structural capacity of the uncut section.

13.4.5 Apertures in the stack shell plates, other than flue inlets, shall have the corners radiused to a minimum of 10 times the plate thickness.

13.4.6 Changes in cylindrical stack diameters shall be made with cones having an apex angle of 60° or less.

13.4.7 Ring stiffeners provided to carry wind pressure should be designed for the circumferential bending moments.

13.4.8 Circumferential bending moments due to wind pressure may be neglected in unstiffened cylindrical shells if the ratio $R/t \leqslant 160$, where R is the radius and t is the corroded thickness of the shell.

13.4.9 Stiffening rings are required if $t \leqslant (5M/9F_{ys})^{0,5}$ and shall be provided as follows:

a) ring spacing limits: $1 \leqslant H_s/D < 3$

b) ring section modulus required:

$$Z \geqslant H_s M/(0,6\ F_{yr})$$

where

M is the maximum circumferential moment per unit length of shell, expressed in newton metres per metre (inch-pounds per inch);

F_{ys} is the minimum yield strength of shell material at design temperature, expressed in newtons per square millimetre (pounds per square inch);

t is the corroded shell thickness, expressed in millimetres (inches);

H_s is the ring spacing, expressed in millimetres (inches);

D is the shell diameter, expressed in millimetres (inches);

Z is the section modulus of ring, expressed in cubic millimetres (cubic inches);

F_{yr} is the minimum yield strength of ring stiffener at the shell design temperature, expressed in newtons per square millimetre (pounds per square inch).

13.4.10 Stack deflection due to static wind loads shall not exceed 1 in 200 of stack height, based on the shell-plate thickness less 50 % of the corrosion allowance and without considering the presence of a lining.

Documents
Document Sharing Hub
Full document details: DIN EN ISO 13705:2007-02

13.4.11 The permitted deviation (execution tolerance) from the vertical of the steel shell at any level above the base of the erected stack shall be determined from Equation (1) in metres or Equation (2) in (feet):

$$\delta = \frac{h}{1\,000\sqrt{1+50/h}} \tag{1}$$

or

$$\delta = \frac{h}{1\,000\sqrt{1+164/h}} \tag{2}$$

where h is the stack height, expressed in metres (feet).

13.5 Wind-induced vibration design

13.5.1 A dynamic analysis shall be made to determine the stack's response to wind and earthquake action. If no specific requirements are given by the purchaser, the methods given in Annex H should be adopted for the dynamics due to wind.

13.5.2 If the critical wind speed for the first mode of vibration of the stack is 1,25 times higher than the maximum (hourly mean) design wind speed (evaluated at the top of the stack), dynamic loads resulting from cross-wind response need not be included in the design load.

13.5.3 If analysis indicates that excessive vibrations due to cross-winds are possible, one of the following methods to reduce vortex-induced amplitudes shall be used.

a) Increase mass and structural damping characteristics (e.g. use of refractory lining).

b) Use a mass damper (e.g. tuned pendulum damper).

c) Use aerodynamic devices (e.g. helical or vertical strakes as described in 13.5.4 and 13.5.5 or staggered vertical plates as described in 13.5.6), the choice of which shall be specified or agreed by the purchaser. Annex H gives recommendations regarding the application of spoilers or strakes.

d) Modify stack length and/or diameter until acceptable vibration characteristics are achieved.

13.5.4 If strakes are required to disrupt wind-induced vibration, they shall be used on at least the upper third of the stack height.

13.5.5 Helical strakes shall consist of three rectangular strakes of 6 mm (1/4 in) thickness at 120° spacing with a pitch of five diameters and a projection of 0,1 diameters.

13.5.6 Staggered vertical plates shall be not less than 6 mm (1/4 in) thick and not more than 1,5 m (5 ft) long. Three strakes shall be placed at 120° around the stack and shall project 0,10 diameters from the outside of the stack. Adjacent levels of strakes shall be staggered 30° from each other.

13.5.7 If a stack is positioned within close proximity of other tall structures, consideration should be given to the possibility of buffeting effects.

13.5.8 If a stack is positioned adjacent to another stack or tall cylindrical vessel, the minimum recommended spacing between centres is $4d$, where d is the largest diameter of the adjacent structures. Interference effects may be neglected for spacing between centres of greater than $15d$.

13.5.9 For a stack downwind of an adjacent stack or a tall vessel, interference effects shall be accounted for by an increase in wind load.

AVA Documents
Document Sharing Hub

Full document details: DIN EN ISO 13705:2007-02

13.6 Materials

The material of the stack, breeching and duct shall be adequate for all load conditions at the lowest specified ambient temperature when the furnace is not in operation (see 12.5).

14 Burners and auxiliary equipment

14.1 Burners

14.1.1 Burner design, selection, spacing, location, installation and operation shall ensure against flame impingement on tubes, tube supports and flame exiting the radiant section of the heater throughout the entire operating range of the burners. The location and operation of burners shall ensure complete combustion within the radiant section of the heater.

14.1.2 Burners shall be designed in accordance with all local and national statutes and regulations.

14.1.3 For burner clearances, the data given in Table 13 shall be used for natural-draught burners and in Table 14 for forced-draught burners. The tables are based on low NO_X burners which are designed to reduce the formation of NO_X below levels generated during normal combustion in conventional burners.

14.1.4 In addition to 14.1.3, the following shall apply.

a) The number and size of burners shall ensure that the visible flame length is a maximum of two-thirds of the radiant section height. For floor-fired heaters the CO content at the bridge wall shall be a maximum of 40 ml/m^3 (40 ppm by volume) for gas-fired heaters, or 80 ml/m^3 (80 ppm by volume) for oil-fired heaters, at maximum design firing conditions.

b) For horizontal opposed firing, the minimum visible clearance between directly opposed firing flame tips shall be 1,2 m (4 ft).

14.1.5 For burners outside the range given in Tables 13 and 14, verifiable data shall be obtained before any design is finalized. For high heat releases, see 14.1.8 for burners and 14.1.10 for pilots.

14.1.6 For other types of burners (e.g. fan-shaped flame or radiant-wall flame), vendor or other verifiable data shall be obtained.

14.1.7 All burners shall be sized for a maximum heat release at the design excess air based on the following:

a) five or fewer burners: 120 % of normal heat release at design conditions;

b) six or seven burners: 115 % of normal heat release at design conditions;

c) eight or more burners: 110 % of normal heat release at design conditions.

● **14.1.8** For liquid-fuel-fired heaters with a maximum heat release greater than 4,4 MW (15×10^6 Btu/h), a minimum of three burners shall be used. Alternatively, if specified or agreed by the purchaser, a single burner with auxiliary guns may be used to permit gun maintenance without shutting down or upsetting the process.

14.1.9 Gas pilots shall be provided for each burner, unless otherwise specified.

Documents
Document Sharing Hub
Full document details: DIN EN ISO 13705:2007-02

Table 13 — Minimum clearance guidelines for natural-draught operation

Burner type	Maximum heat release per burner		Minimum clearance							
			A		B		C		D	
			Vertical to centre-line roof tubes or refractory (vertical firing only)		Horizontal from burner centre-line to wall tubes centre-line		Horizontal from burner centre-line to unshielded refractory		Between opposing burners (horizontal firing)	
	MW	(Btu/h × 10^6)	m	(ft)	m	(ft)	m	(ft)	m	(ft)
Oil-firing	1,0	(3,41)	4,3	(14,1)	0,8	(2,6)	0,56	(1,9)	6,5	(21,4)
	1,5	(5,12)	5,6	(18,5)	0,9	(3,0)	0,70	(2,3)	8,8	(29,0)
	2,0	(6,8)	7,0	(22,9)	1,1	(3,5)	0,83	(2,7)	11,2	(36,7)
	2,5	(8,5)	8,3	(27,4)	1,2	(3,9)	0,96	(3,1)	13,3	(43,6)
	3,0	(10,2)	9,7	(31,8)	1,3	(4,3)	1,09	(3,6)	14,8	(48,7)
	3,5	(11,9)	11,0	(36,2)	1,4	(4,7)	1,22	(4,0)	16,4	(53,8)
	4,0	(13,6)	12,4	(40,7)	1,6	(5,2)	1,35	(4,4)	18,0	(59,0)
Gas-firing	0,5	(1,71)	2,6	(8,5)	0,6	(1,9)	0,44	(1,4)	3,4	(11,1)
	1,0	(3,41)	3,6	(11,9)	0,7	(2,4)	0,56	(1,9)	4,9	(16,2)
	1,5	(5,11)	4,6	(15,2)	0,8	(2,8)	0,70	(2,3)	6,5	(21,4)
	2,0	(6,82)	5,6	(18,5)	1,0	(3,2)	0,83	(2,7)	8,1	(26,5)
	2,5	(8,53)	6,7	(21,8)	1,1	(3,6)	0,96	(3,1)	9,6	(31,6)
	3,0	(10,24)	7,7	(25,2)	1,2	(4,1)	1,09	(3,6)	11,1	(36,4)
	3,5	(11,94)	8,7	(28,5)	1,4	(4,5)	1,22	(4,0)	11,9	(38,9)
	4,0	(13,65)	9,7	(31,8)	1,5	(4,9)	1,35	(4,4)	12,6	(41,5)
	4,5	(15,36)	10,7	(35,1)	1,6	(5,3)	1,48	(4,8)	13,4	(44,0)
	5,0	(17,06)	11,7	(38,5)	1,8	(5,7)	1,61	(5,3)	14,2	(46,6)

For horizontal firing, the distance between the burner centre-line and the roof tube centre-line or refractory shall be 50 % greater than the distances in column B.

For combination liquid-and-gas burners, the clearances shall be based on liquid-fuel firing, except if liquid fuel is used for start-up only.

For conventional gas burners, the longitudinal clearance may be decreased. This shall be achieved by multiplying dimensions in column A by a factor of 0,77 and column D by a factor of 0,67.

For intermediate firing rates, the required clearances may be achieved by linear interpolation.

The clearances in column A and column D should be increased by 20 % for low NO_X burners with NO_X levels below 70 mg/m^3 (34 ppm by volume) based on a single burner with natural-gas firing, with 15 % excess ambient air and a firebox temperature of 870 °C (1 600 °F).

NOTE Fuel-gas composition can affect the flame length.

Documents
Document Sharing Hub

Full document details: DIN EN ISO 13705:2007-02

Table 14 — Minimum clearance guidelines for forced-draught operations

Burner type	Maximum heat release per burner		Horizontal distance to centre-line of wall tubes from burner centre-line	
	MW	(Btu/h × 10^6)	m	(ft)
Oil-firing	2,00	(6,820)	0,932	(3,058)
	3,00	(10,240)	1,182	(3,878)
	4,00	(13,650)	1,359	(4,458)
	5,00	(17,060)	1,520	(4,987)
	6,00	(20,470)	1,664	(5,459)
	8,00	(27,300)	1,919	(6,292)
	10,00	(34,120)	2,143	(7,031)
	12,00	(40,950)	2,346	(7,697)
Gas-firing	2,00	(6,820)	0,932	(3,058)
	3,00	(10,240)	1,182	(3,878)
	4,00	(13,650)	1,359	(4,458)
	5,00	(17,060)	1,520	(4,987)
	6,00	(20,470)	1,664	(5,459)
	8,00	(27,290)	1,786	(5,860)
	10,00	(34,120)	1,923	(6,309)
	12,00	(40,950)	2,035	(6,677)

For horizontal firing, the distance between the burner centre-line and the roof tube centre-line or refractory shall be 50 % greater than the distances shown in the column above.

For combination liquid-and-gas burners, the clearances shall be based on liquid-fuel firing, except if liquid fuel is used for start-up only.

For intermediate firing rates, the required clearances may be achieved by linear interpolation.

Lack of data does not allow other clearances to be specified.

At high peak flux, additional clearances may be required.

14.1.10 If a continuous pilot is provided, it shall meet the following requirements.

a) The pilot shall have a nominal heat release of 22 kW (75 000 Btu/h). The minimum heat release shall be approved by the purchaser if it is for a high capacity burner whose heat release is 4,4 MW (15 × 10^6 Btu/h) or greater.

b) The pilot burner shall be provided with a continuous supply of air, under all operating conditions. This includes operation with the main burner out of service.

c) The pilot burner shall remain stable over the full firing range of the main burner. It shall also remain stable upon loss of main burner fuel, minimum draught, all combustion air flow rates and for all operating conditions.

Documents
Document Sharing Hub

Full document details: DIN EN ISO 13705:2007-02