DEUTSCHE NORM November 2005

DIN EN ISO 21049

ICS 21.140; 23.080

Pumpen –
Wellendichtungssysteme für Kreiselpumpen und rotierende Verdrängerpumpen (ISO 21049:2004); Englische Fassung EN ISO 21049:2004

Pumps –
Shaft sealing systems for centrifugal and rotary pumps (ISO 21049:2004);
English version EN ISO 21049:2004

Pompes –
Dispositifs d'éanchéité de l'arbre pour pompes centrifuges et rotatives (ISO 21049:2004);
Version anglaise EN ISO 21049:2004

Gesamtumfang 203 Seiten

Normenausschuss Erdöl- und Erdgasgewinnung (NÖG) im DIN
Normenausschuss Maschinenbau (NAM) im DIN

Documents
Document Sharing Hub

Full document details: DIN EN ISO 21049:2005-11

Nationales Vorwort

Diese Europäische Norm wurde vom Technischen Komitee CEN/TC 12 „*Materialien, Ausrüstungen und Offshore-Bauwerke für die Erdöl-, petrochemische und Erdgasindustrie*“ (Sekretariat: Frankreich) erstellt.

Die ISO 21049:2004 war erarbeitet worden in einer gemeinsamen Arbeitsgruppe (JWG) des Technischen Komitees ISO/TC 115 „*Pumps*“; Subkomitee SC 3 „*Installation and special application*“ (Sekretariat: USA) und des Technischen Komitees ISO/TC 67 „*Materials, equipment and offshore structures for petroleum, petrochemical and natural gas industries*“; Subkomitee SC 6 „*Processing equipment and systems*“. Experten des Normenausschusses Maschinenbau (NAM) hatten an der Erstellung dieser ISO-Norm mitgewirkt.

Diese Europäische Norm enthält unter Berücksichtigung des DIN-Präsidialbeschlusses 13/1983 nur die englische Originalfassung der ISO-Norm.

Documents
Document Sharing Hub

Full document details: DIN EN ISO 21049:2005-11

EUROPEAN STANDARD

NORME EUROPÉENNE

EUROPÄISCHE NORM

EN ISO 21049

December 2004

ICS 23.100.60; 23.080; 83.140.50

English version

Pumps - Shaft sealing systems for centrifugal and rotary pumps (ISO 21049:2004)

Pompes - Dispositifs d'étanchéité de l'arbre pour pompes centrifuges et rotatives (ISO 21049:2004)

Pumpen - Wellendichtungssysteme für Kreiselpumpen und rotierende Verdrängerpumpen (ISO 21049:2004)

This European Standard was approved by CEN on 21 December 2004.

CEN members are bound to comply with the CEN/CENELEC Internal Regulations which stipulate the conditions for giving this European Standard the status of a national standard without any alteration. Up-to-date lists and bibliographical references concerning such national standards may be obtained on application to the Central Secretariat or to any CEN member.

This European Standard exists in three official versions (English, French, German). A version in any other language made by translation under the responsibility of a CEN member into its own language and notified to the Central Secretariat has the same status as the official versions.

CEN members are the national standards bodies of Austria, Belgium, Cyprus, Czech Republic, Denmark, Estonia, Finland, France, Germany, Greece, Hungary, Iceland, Ireland, Italy, Latvia, Lithuania, Luxembourg, Malta, Netherlands, Norway, Poland, Portugal, Slovakia, Slovenia, Spain, Sweden, Switzerland and United Kingdom.

EUROPEAN COMMITTEE FOR STANDARDIZATION
COMITÉ EUROPÉEN DE NORMALISATION
EUROPÄISCHES KOMITEE FÜR NORMUNG

Management Centre: rue de Stassart, 36 B-1050 Brussels

© 2004 CEN All rights of exploitation in any form and by any means reserved worldwide for CEN national Members.

Ref. No. EN ISO 21049:2004: E

Documents
Document Sharing Hub

Full document details: DIN EN ISO 21049:2005-11

Contents

Page

Foreword 5

Introduction 5

1 Scope 7

2 Normative references 7

3 Terms and definitions 9

4 Sealing systems 16
4.1 Seal categories, types and arrangements 16
4.1.1 General 16
4.1.2 Seal categories 16
4.1.3 Seal types 17
4.1.4 Seal arrangements 17
4.1.5 Seal orientations 18
4.2 Objectives 18
4.3 Specifying and/or purchasing a sealing system 18

5 General 25
5.1 Unit responsibility 25
5.2 Dimensions 26

6 Design requirements 26
6.1 Common design requirements (all categories) 26
6.1.1 General information 26
6.1.2 Seal chamber and gland plate 29
6.1.3 Cartridge seal sleeves 36
6.1.4 Mating rings 38
6.1.5 Flexible elements 40
6.1.6 Materials 40
6.2 Design requirements (category-specific) 44
6.2.1 Category 1 seals 44
6.2.2 Category 2 seals 45
6.2.3 Category 3 seals 46

7 Specific seal configurations 47
7.1 Arrangement 1 seals 47
7.1.1 Seal sleeves 47
7.1.2 Seal chamber and gland plate 47
7.2 Arrangement 2 seals 47
7.2.1 General 47
7.2.2 Seal sleeves 48
7.2.3 Seal chamber and gland plates 48
7.2.4 Contacting wet seals with a liquid buffer fluid (2CW-CW) 49
7.2.5 Seal chamber and gland plates for contacting wet inner seal with a dry-running containment seal (2CW-CS) 49
7.2.6 Seal chamber and gland plates for non-contacting inner seal with a dry-running containment seal (2NC-CS) 50
7.3 Arrangement 3 seals 50
7.3.1 General 50
7.3.2 Seal sleeves 51
7.3.3 Seal chamber and gland plates 51
7.3.4 Contacting wet seal configurations with a liquid barrier fluid (3CW-FB, 3CW-FF, 3CW-BB) 51
7.3.5 Standard seal types and arrangements for non-contacting seal configurations with a gas barrier fluid (3NC-FB, 3NC-FF, 3NC-BB) 52

Documents
Document Sharing Hub

Full document details: DIN EN ISO 21049:2005-11

Page

8 Accessories ... 52
8.1 Auxiliary piping systems ... 52
8.2 Mechanical seal flush/cooling systems (Group I) ... 55
8.3 Quench systems (Group II) ... 56
8.4 Cooling-water systems (Group III) ... 56
8.5 Accessories and auxiliary system components ... 57
8.5.1 Cyclone separator ... 57
8.5.2 Flow control orifice ... 58
8.5.3 Seal flush coolers ... 59
8.5.4 Barrier/buffer fluid reservoirs ... 59
8.5.5 Barrier/buffer-fluid selection criteria ... 63
8.6 Barrier/buffer fluid and seal flush positive-circulating devices ... 63
8.6.1 General ... 63
8.6.2 Internal circulating device ... 63
8.6.3 External circulating pump ... 63
8.6.4 External seal flush systems ... 63
8.6.5 Condensate collection reservoir ... 64
8.6.6 Barrier/buffer-gas supply systems ... 64

9 Instrumentation ... 65
9.1 General ... 65
9.2 Temperature-indicating gauges ... 65
9.3 Thermowells ... 65
9.4 Pressure gauges ... 65
9.5 Switches ... 66
9.5.1 Alarm, trip and control switches ... 66
9.5.2 Pressure switches ... 66
9.5.3 Level switches ... 67
9.5.4 Flow switches ... 67
9.6 Level indicators ... 67
9.7 Flow instruments ... 67
9.7.1 Flow indicators ... 67
9.7.2 Flow meters ... 67
9.7.3 Flow transmitters ... 67
9.8 Relief valves ... 67
9.9 Regulators ... 68
9.10 Pressure amplifiers ... 68

10 Inspection, testing and preparation for shipment ... 68
10.1 General ... 68
10.2 Inspection ... 68
10.3 Testing ... 69
10.3.1 Seal qualification testing ... 70
10.3.2 Hydrostatic test for pressure-containing mechanical seal parts and accessories ... 83
10.3.3 Test of job seal by seal manufacturer ... 84
10.3.4 Air test ... 84
10.3.5 Test of job seal by pump manufacturer ... 84
10.4 Preparation for shipment ... 85

11 Data transfer ... 85
11.1 General ... 85
11.2 Proposal data ... 86
11.3 Contract data ... 87

Annex A (informative) **Recommended seal selection procedure** ... 91

Annex B (informative) **Typical materials standards for seal chamber and mechanical seal components** ... 136

Annex C (normative) **Mechanical seal data sheets** ... 143

Annex D (informative) **Mechanical seal codes** ... 152

AVA Documents
Document Sharing Hub

Full document details: DIN EN ISO 21049:2005-11

Page

Annex E (normative) **Seal and pump vendor interface responsibilities** **154**
Annex F (informative) **Heat generation and heat soak calculations** **156**
Annex G (normative) **Standard flush plans and auxiliary hardware** **163**
Annex H (informative) **Inspector checklist for all seals** **194**
Annex I (normative) **Form for mechanical seal qualification test** **195**
Annex J (normative) **Mechanical seals data requirements form** **198**
Bibliography **199**

Documents
Document Sharing Hub

Full document details: DIN EN ISO 21049:2005-11

Foreword

The text of ISO 21049:2004 has been prepared by Technical Committee ISO/TC 115 "Pumps" of the International Organization for Standardization (ISO) and has been taken over as EN ISO 21049:2004 by Technical Committee CEN/TC 12 "Materials, equipment and offshore structures for petroleum and natural gas industries" the secretariat of which is held by AFNOR.

This European Standard shall be given the status of a national standard, either by publication of an identical text or by endorsement, at the latest by June 2005, and conflicting national standards shall be withdrawn at the latest by June 2005.

NOTE Attention is drawn to the fact that Clause 10.2.3 permits the use of alternative standards (e.g. EN 13445-5) for the non-destructive examination of materials.

According to the CEN/CENELEC Internal Regulations, the national standards organizations of the following countries are bound to implement this European Standard: Austria, Belgium, Cyprus, Czech Republic, Denmark, Estonia, Finland, France, Germany, Greece, Hungary, Iceland, Ireland, Italy, Latvia, Lithuania, Luxembourg, Malta, Netherlands, Norway, Poland, Portugal, Slovakia, Slovenia, Spain, Sweden, Switzerland and United Kingdom.

Endorsement notice

The text of ISO 21049:2004 has been approved by CEN as EN ISO 21049:2004 without any modifications.

Documents
Document Sharing Hub

Full document details: DIN EN ISO 21049:2005-11

Introduction

This International Standard is based on the accumulated knowledge and experience of manufacturers and users of equipment in the petroleum, natural gas and chemical industries, but its use is not restricted to these industries.

Users of this International Standard should be aware that further or differing requirements may be needed for individual applications. This International Standard is not intended to inhibit a vendor from offering, or the purchaser from accepting, alternative equipment or engineering solutions for the individual application. This may be particularly appropriate where there is innovative or developing technology. Where an alternative is offered, the vendor should identify any variations from this International Standard and provide details.

The purpose of this International Standard is to assist purchasers with the selection and operation of mechanical seals for pumps.

This International Standard is a stand-alone seal standard and is referenced normatively in ISO 13709. It is applicable to both new and retrofitted pumps, and to pumps other than ISO 13709 pumps (e.g. ASME B73.1, ASME B73.2 and API 676 pumps).

In this International Standard, where practical, US Customary units are included in brackets for information.

A bullet (●) at the beginning of a clause or subclause indicates that either a decision is required or further information is to be provided by the purchaser. This information should be indicated on data sheets or stated in the enquiry or purchase order (see examples in Annex C).

Documents
Document Sharing Hub

Full document details: DIN EN ISO 21049:2005-11

1 Scope

This International Standard specifies requirements and gives recommendations for sealing systems for centrifugal and rotary pumps used in the petroleum, natural gas and chemical industries. It is applicable mainly for hazardous, flammable and/or toxic services where a greater degree of reliability is required for the improvement of equipment availability and the reduction of both emissions to the atmosphere and life-cycle sealing costs. It covers seals for pump shaft diameters from 20 mm (0,75 in) to 110 mm (4,3 in).

This International Standard is also applicable to seal spare parts and can be referred to for the upgrading of existing equipment. A classification system for the seal configurations covered by this International Standard into categories, types, arrangements and orientations is provided.

2 Normative references

The following referenced documents are indispensable for the application of this document. For dated references, only the edition cited applies. For undated references, the latest edition of the referenced document (including any amendments) applies.

ISO 7 (all parts), *Pipe threads where pressure-tight joints are made on the threads*

ISO 261, *ISO general-purpose metric screw threads — General plan*

ISO 262, *ISO general-purpose metric screw threads — Selected sizes for screws, bolts, and nuts*

ISO 286-2, *ISO system of limits and fits — Part 2: Tables of standard tolerance grades and limit deviations for holes and shafts*

ISO 724, *ISO general-purpose metric screw threads — Basic dimensions*

ISO 965 (all parts), *ISO general-purpose metric screw threads — Tolerances*

ISO 3069, *End-suction centrifugal pumps — Dimensions of cavities for mechanical seals and for soft packing*

ISO 4200, *Plain end steel tubes, welded and seamless — General tables of dimensions and masses per unit length*

ISO 7005-1, *Metallic flanges — Part 1: Steel flanges*

ISO 10438 (all parts), *Petroleum, petrochemical and natural gas industries — Lubrication, haft-sealing and control-oil systems and auxiliaries*

ISO 13709, *Centrifugal pumps for petroleum, petrochemical and natural gas industries*

ISO 15649, *Petroleum and natural gas industries — Piping*

IEC 60079 (all parts), *Electrical apparatus for explosive gas atmospheres*

IEC 60529, *Degrees of protection provided by enclosures (IP code)*

Documents
Document Sharing Hub

Full document details: DIN EN ISO 21049:2005-11

AISI, *Standards, codes and specifications of the American Iron and Steel Institute* [1)]

API RP 520 (all parts), *Sizing, selection, and installation of pressure-relieving devices in refineries* [2)]

API Std 526, *Flanged steel pressure relief valves*

ASME V, *ASME Boiler and pressure vessel code, Section V, Non-destructive examination* [3)]

ASME VIII, *ASME Boiler and pressure vessel code, Section VIII, Rules for the construction of pressure vessels*

ASME IX*, ASME Boiler and pressure vessel code, Section IX, Welding and brazing qualifications*

ASME B1.1, *Unified inch screw threads (UN and UNR thread form*)

ASME B1.20.1, *Pipe threads, general purpose, inch*

ASME B16.11*, Forged fittings, socket-welding and threaded*

ASME B16.20, *Metallic gaskets for pipe flanges — Ring joint, spiral-wound, and jacketed*

ASME B73.1, *Specification for horizontal end suction centrifugal pumps for chemical process*

ASME B73.2, *Specification for vertical in-line centrifugal pumps for chemical process*

ASME PTC 8.2, *Centrifugal pumps, performance test codes*

AWS D1.1, *Structural welding code — Steel* [4)]

EN 287 (all parts), *Approval testing of welders — Fusion welding* [5)]

EN 288 (all parts), *Specification and approval of welding procedures for metallic materials*

EN 13445 (all parts), *Unfired pressure vessels*

EPA Method 21, Appendix A of Title 40, Part 60 of the U.S. Code of Federal Regulations, *Environmental Protection Agency, United States* [6)]

NEMA 250, *Enclosures for electrical equipment (1 000 volts maximum)* [7)]

NFPA 70, *National Electrical Code* [8)]

Title 1, Part A, Section 112, *U.S. National Emission Standards for Hazardous Air Pollutants (NESHAPs) (Clean Air Act Amendment)* [9)]

---

1) Available from the American Iron and Steel Institute: 1140 Connecticut Ave., Suite 705, Washington, D.C. 20036, USA.

2) Available from the American Petroleum Institute, 1220 L Street, NW, Washington, D.C. 20005-4070, USA.

3) Available from the American Society of Mechanical Engineers: Three Park Avenue, New York, NY 10016-5990, USA.

4) Available from the American Welding Society, 550 N.W. Le Jeune Rd, Miami, FL 33126, USA.

5) Comité Européen de Normalisation, 36, rue de Stassart, B-1050 Brussels, Belgium.

6) Available from the National Archives and Records Administration, 700 Pennsylvania Avenue, N.W., Washington, D.C. 20408, USA.

7) Available from the National Electrical Manufacturers Association, 1300 North 17th Street, Rosslyn, VA 22209, USA.

8) Available from the National Fire Protection Association, 1 Batterymarch Park, P.O. Box 9101, Quincy, MA 02269-9101, USA.

9) Environmental Protection Agency, Ariel Rios Building, 1200 Pennsylvania Avenue, N.W., Mail Code 3213A, Washington, D.C. 20460, USA.

AVA Documents
Document Sharing Hub

Full document details: DIN EN ISO 21049:2005-11

3 Terms and definitions

For the purposes of this document, the following terms and definitions apply.

3.1
anti-rotation device
device used to prevent rotation of one component relative to an adjacent component in a seal assembly

EXAMPLES Key, pin.

3.2
Arrangement 1 seal
seal configuration having one seal per cartridge assembly

3.3
Arrangement 2 seal
seal configuration having two seals per cartridge assembly with a containment seal chamber which is at a pressure lower than the seal chamber pressure

3.4
Arrangement 3 seal
seal configuration having two seals per cartridge assembly that utilize an externally supplied barrier fluid

3.5
back-to-back configuration
dual seal in which both of the flexible elements are mounted between the mating rings

3.6
balanced seal
mechanical seal in which the seal balance ratio is less than 1

3.7
barrier fluid
externally supplied fluid at a pressure above the pump seal chamber pressure, introduced into an Arrangement 3 seal to completely isolate the process liquid from the environment

3.8
bellows seal
type of mechanical seal which uses a flexible metal bellows to provide secondary sealing and spring-type loading

3.9
buffer fluid
externally supplied fluid, at a pressure lower than the pump seal chamber pressure, used as a lubricant and/or to provide a diluent in an Arrangement 2 seal

3.10
cartridge seal
completely self-contained unit (including seal faces, flexible elements, seal gland plate, sleeve and mating ring) which is pre-assembled and preset before installation

3.11
connection
threaded or flanged joint that mates a port to a pipe or to a piece of tubing

3.12
contacting seal
seal design in which the mating faces are not designed to intentionally create aerodynamic or hydrodynamic forces to sustain a specific separation gap

Documents
Document Sharing Hub

Full document details: DIN EN ISO 21049:2005-11

NOTE Contacting seals can actually develop a full fluid film but this is not typical. Contacting seals do not incorporate geometry, e.g. grooves, pads, face waviness, to ensure that the faces do not touch. The amount of contact is generally very low and permits reliable operation with low leakage.

3.13
containment seal
seal design with one flexible element, seal ring and mating ring mounted in the containment seal chamber

NOTE The outer seal for all Arrangement 2 configurations is a containment seal.

3.14
containment seal chamber
component forming the cavity into which the containment seal is installed

3.15
crystallizing fluid
fluid which is in the process of forming solids or which may form solids due to dehydration or chemical reaction

3.16
distributed flush system
arrangement of holes, passages, baffles, etc., designed to promote an even distribution of flush fluid around the circumference of the seal faces, qualified by testing in accordance with this International Standard

3.17
drive collar
external part of the seal cartridge that transmits torque to the seal sleeve and prevents axial movement of the seal sleeve relative to the shaft

3.18
dual mechanical seal
Arrangement 2 or Arrangement 3 seal of any kind

3.19
dynamic sealing-pressure rating
highest pressure differential that the seal or seal assembly can continuously withstand at the maximum allowable temperature while the shaft is rotating

NOTE Thereafter, the seal retains its static sealing pressure rating.

3.20
face-to-back configuration
dual seal in which one mating face is mounted between the two flexible elements and one flexible element is mounted between the two mating seal rings

3.21
face-to-face configuration
dual seal in which both of the mating seal rings are mounted between the flexible elements

3.22
flashing
rapid change in fluid state from liquid to gas

NOTE In a dynamic seal, this can occur when frictional energy is added to the fluid as it passes between the primary seal faces, or when fluid pressure is reduced below the fluid's vapour pressure because of a pressure drop across the seal faces.

Documents
Document Sharing Hub

Full document details: DIN EN ISO 21049:2005-11

3.23
flashing hydrocarbon
liquid hydrocarbon with an absolute vapour pressure greater than 0,1 MPa (1 bar) (14,7 psi) at the pumping temperature, or a fluid that will readily boil at ambient conditions

3.24
flexible element
combination of components which move axially relative to the shaft/sleeve or seal chamber

3.25
flexible graphite
pure carbon graphite material used for static (secondary seal) gaskets in mechanical seal design, from cryogenic to hot service

3.26
floating bushing
bushing that fits around the shaft or sleeve and has sufficient clearance around the outside diameter so it can move or “float” radially

3.27
FFKM perfluoroelastomer
FFKM
chemically resistant O-ring elastomer material suitable for high temperature service

3.28
FKM fluoroelastomer
FKM
type of O-ring elastomer material commonly used in mechanical seals

3.29
flush, noun
fluid which is introduced into the seal chamber on the process fluid side in close proximity to the seal faces and typically used for cooling and lubricating the seal faces

3.30
flush plan
configuration of pipe, instruments and controls designed to route the fluid concerned to the seals

NOTE Auxiliary piping plans vary with the application, seal type and arrangement.

3.31
gland plate
end plate which connects the stationary assembly of a mechanical seal to the seal chamber or containment seal chamber

3.32
hook sleeve
sleeve, with a step or hook at the product end, placed over the shaft to protect it from wear and corrosion

NOTE The step is usually abutted against the impeller to hold it in place with a gasket between the shaft and the step (hook).

3.33
inner seal
⟨Arrangement 2 and Arrangement 3⟩ seal that is located closest to the pump impeller in the seal chamber

3.34
internally-mounted seal
seal configuration in which the seal is mounted within the boundaries of the seal chamber and gland plate

AVA Documents
Document Sharing Hub

Full document details: DIN EN ISO 21049:2005-11

3.35
internal circulating device
pumping ring
device located in the seal chamber to circulate seal chamber fluid through a cooler or barrier/buffer fluid reservoir

3.36
leakage concentration
measure of the concentration of a volatile organic compound or other regulated emission in the environment immediately surrounding the seal

3.37
leakage rate
volume or mass of fluid passing between the seal faces through a seal in a given length of time

3.38
light hydrocarbon
hydrocarbon liquid that will readily boil at ambient conditions

NOTE Typically this definition includes pure and mixed streams of pentane (C_5) and lighter liquids.

3.39
mating ring
disk- or ring-shaped member, mounted either on a sleeve or in a housing such that it does not move axially relative to the sleeve or the housing, which provides the mating seal face for the seal ring

3.40
maximum allowable temperature
maximum continuous temperature for which the manufacturer has designed the equipment (or any part to which the term is referred) when handling the specified fluid at the specified maximum operating pressure

NOTE 1 This information is supplied by the seal manufacturer.

NOTE 2 The maximum allowable temperature is usually set by material considerations. This may be the material of the casing or a temperature limit imposed by a gasket or O-ring. The yield strength and ultimate strength are temperature-dependent. A component's stress level can depend on operating pressure. Thus, the margin between the strength limit of the material and the operating stress depends on both the material's operating temperature and the component's stress level. If the temperature is lowered, the material's strength increases and the stress level of the component may increase. This is the reason for associating the maximum allowable temperature to the maximum specified operating pressure.

3.41
maximum allowable working pressure
MAWP
maximum continuous pressure for which the manufacturer has designed the equipment (or any part to which the term is referred) when handling the specified fluid at the specified maximum operating temperature

cf. **static sealing-pressure rating** (3.69), **dynamic sealing-pressure rating** (3.19)

3.42
maximum dynamic sealing pressure
MDSP
highest pressure expected at the seal (or seals) during any specified operating condition and during start-up and shutdown

NOTE In determining this pressure, consideration is given to the maximum suction pressure, the flush pressure, and the effect of clearance changes within the pump. This is a process condition and is specified by the purchaser.

3.43
maximum operating temperature
maximum temperature to which the seal (or seals) can be subjected

NOTE This is a process condition and is specified by the purchaser.

Documents
Document Sharing Hub

Full document details: DIN EN ISO 21049:2005-11

3.44
maximum static sealing pressure
MSSP
highest pressure, excluding pressures encountered during hydrostatic testing, to which the seal (or seals) can be subjected while the pump is shut down

NOTE This is a process condition and is specified by the purchaser.

3.45
non-contacting seal
seal design in which the mating faces are designed to intentionally create aerodynamic or hydrodynamic separating forces to sustain a specific separation gap between the seal ring and the mating ring

NOTE Non-contacting seals are specifically designed so that there is always an operating gap between the stationary and rotating face.

3.46
non-flashing hydrocarbon
liquid hydrocarbon whose vapour pressure at any specified operating temperature is less than an absolute pressure of 0,1 MPa (1 bar) (14,7 psi), or a fluid that will not readily boil at ambient conditions

3.47
non-hydrocarbon service
service in which the fluid, such as sour water, boiler feed water, sodium hydroxide, acids and amines, contains no hydrocarbons or the fluid has relatively small quantities of entrained hydrocarbons

3.48
non-pusher seal
seal in which the secondary seal is not required to slide axially to compensate for wear and misalignment

NOTE A non-pusher seal is usually the metal-bellows Type B or C.

3.49
observed test
product test which is observed at the discretion of the purchaser, who has been given notice of the test by the manufacturer, but does not constitute a manufacturing hold point

3.50
orifice nipple
pipe nipple made of solid bar stock with an orifice hole drilled through it to regulate the flush flow

NOTE Orifice nipples are commonly found on Plan 11 systems.

3.51
O-ring
elastomeric sealing ring with an O-shaped (circular) cross-section, which may be used as a secondary seal or as a gasket

3.52
outer seal
⟨Arrangement 2 and Arrangement 3⟩ seal located farthest from the pump impeller

3.53
polymerizing fluid
fluid which is in the process of changing, or is capable of changing, from one chemical composition to another with longer-chain components and different properties, usually becoming significantly more viscous and/or tacky

AVA Documents
Document Sharing Hub

Full document details: DIN EN ISO 21049:2005-11

3.54
port
fluid passageway, typically located in the gland plate

3.55
pressure casing
composite of all the stationary pressure-containing parts of the seal, including seal chamber, seal gland plate, and barrier/buffer fluid reservoir and other attached parts, but excluding the seal ring and the mating ring

3.56
product temperature margin
difference between the vaporization temperature of the fluid at the seal chamber pressure and the actual temperature of the fluid

NOTE For pure fluids, the vaporization temperature is the saturation temperature at seal chamber pressure; for mixed fluids, the vaporization temperature is the bubble-point temperature at the seal chamber pressure.

3.57
pump manufacturer
agency that designs, manufactures, tests and provides service support for the pump

NOTE The pump manufacturer may also purchase the sealing system and perform the installation.

3.58
purchaser
agency that issues the order and specifications to the vendor

3.59
pusher seal
seal in which the secondary seal is mounted between the seal ring on the flexible element and the sleeve or seal gland plate in which this secondary seal slides axially to compensate for wear and misalignment

3.60
quench, noun
neutral fluid, usually water or steam, introduced on the atmospheric side of the seal to retard formation of solids that may interfere with seal movement, or for other purposes

3.61
seal
combination of a mating ring, seal ring, secondary seal(s), axially flexible element(s) and supporting hardware that allows a rotating shaft to penetrate a stationary housing without incurring uncontrolled leakage

3.62
seal balance ratio
ratio of seal face area exposed to closing force by hydraulic pressure in the seal chamber, to the total seal face area

See Figure 10.

NOTE It is sometimes expressed as a percentage.

3.63
seal chamber
component, either integral with or separate from the pump case (housing), that forms the region between the shaft and casing into which the shaft seal is installed

3.64
seal face
side or end of a mating ring or seal ring which provides the sealing surface on the ring

Documents
Document Sharing Hub

Full document details: DIN EN ISO 21049:2005-11

3.65
seal manufacturer
agency that designs, manufactures, tests, and provides service support for seals and associated support sealing systems

3.66
seal ring
seal face that contacts the mating ring; it is flexibly mounted using springs or bellows

3.67
secondary seal
device, such as an O-ring or flexible graphite gasket, or bellows, that prevents leakage around other seal components

3.68
service condition
maximum or minimum temperature or pressure under static or dynamic conditions

3.69
static sealing-pressure rating
highest pressure that the seal can continuously withstand at the maximum allowable temperature while the shaft is not rotating

NOTE Thereafter, the seal maintains its dynamic sealing pressure rating.

3.70
throat bushing
device that forms a restrictively close clearance around the sleeve (or shaft) between the inner seal and the impeller

3.71
throttle bushing
device that forms a restrictively close clearance around the sleeve (or shaft) at the outboard end of a mechanical seal gland plate

3.72
total indicator reading
total indicated runout
TIR
difference between the maximum and minimum readings of a dial indicator or similar device when monitoring a face or cylindrical surface during one complete revolution of the monitored surface

NOTE For a perfectly cylindrical surface, the indicator reading implies an eccentricity equal to half the reading. For a perfectly flat face, the indicator reading gives an out-of-squareness equal to the reading. If the diameter in question is not perfectly cylindrical or flat, interpretation of the meaning of TIR is more complex, and may represent ovality or lobing.

3.73
Type A seal
balanced, inside-mounted, cartridge-design pusher seal with multiple springs and in which the flexible element normally rotates

3.74
Type B seal
balanced, inside-mounted, cartridge-design non-pusher (metal bellows) seal in which the flexible element normally rotates, and in which the secondary sealing elements are elastomeric O-rings

3.75
Type C seal
balanced, inside-mounted, cartridge-design non-pusher (metal bellows) seal in which the flexible element is normally stationary, and in which the secondary sealing elements are flexible graphite

AVA Documents
Document Sharing Hub

Full document details: DIN EN ISO 21049:2005-11

3.76
vendor
supplier
manufacturer of the equipment, or his agent, normally responsible for service support

NOTE This International Standard addresses the responsibilities between two parties, defined as the purchaser and the vendor or the supplier. There are many parties that are involved in the purchase and manufacture of the equipment. These parties are given different titles depending on their order in the chain. They may be called buyer, contractor, manufacturer or subvendor. For example, the party supplying a lubricating oil console may be the console vendor of the compressor manufacturer, the subvendor of the purchaser, and the purchaser of components within the console. All of these terms, however, can be reduced to the purchaser and vendor or supplier. It is for this reason that only these two terms are defined. Attempts to define these other terms would only cause confusion.

3.77
volatile hazardous air pollutant
VHAP
any compound as defined by Title 1, Part A, Section 112 of the U.S. National Emission Standards for Hazardous Air Pollutants (NESHAPs) (Clean Air Act Amendment)

3.78
witnessed inspection
witnessed test
inspection or test for which the purchaser is notified of the timing and a hold is placed on production until the purchaser or his representative is in attendance

4 Sealing systems

4.1 Seal categories, types and arrangements

4.1.1 General

The seal configurations covered by this International Standard can be classified into three categories (1, 2 and 3), three types (A, B and C) and three arrangements (1, 2 and 3). Further, Arrangement 2 and 3 seals can be in three orientations: “face-to-back”, “back-to-back” and “face-to-face”. These categories, types, arrangements and orientations are defined below.

See Figures 1 to 9 for typical representations.

4.1.2 Seal categories

There are three seal categories, as follows.

— **Category 1** seals are intended for use in non-ISO 13709 pump seal chambers, preferably meeting the dimensional requirements of ASME B73.1, ASME B73.2 and ISO 3069 Type C seal chamber dimensions and their application is limited to seal chamber temperatures from – 40 °C (– 40 °F) to 260 °C (500 °F) and absolute pressures up to 2,2 MPa (22 bar) (315 psi).

— **Category 2** seals are intended for use in seal chambers meeting the chamber envelope dimensional requirements of ISO 13709. Their application is limited to seal chamber temperatures from – 40 °C (– 40 °F) to 400 °C (750 °F) and absolute pressures up to 4,2 MPa (42 bar) (615 psi).

— **Category 3** provides the most rigorously tested and documented seal design. It is required that the entire seal cartridge is qualification tested as an assembly in the required fluid. They meet the seal chamber envelope requirements of ISO 13709 (or equal). Their application is limited to seal chamber temperatures from – 40 °C (– 40 °F) to 400 °C (750 °F) and absolute pressures up to 4,2 MPa (42 bar) (615 psi).

A summary of the main differences in seal categories is given in Annex A.

Temperatures and pressures outside the ranges of these categories, or which involve fluids not included in Annex A, may require engineering and seal selection guidance other than provided in this International Standard.

Full document details: DIN EN ISO 21049:2005-11

4.1.3 Seal types

There are three seal types, as follows.

— **Type A** seal is a balanced, inside-mounted, cartridge design, pusher seal with multiple springs and in which the flexible element normally rotates. Secondary sealing elements are elastomeric O-rings.

  Materials are specified in Clause 6. Guidance on equivalent materials standards is given in Annex B. Figure 7 depicts a Type A seal.

— **Type B** seal is a balanced, inside-mounted, cartridge design, non-pusher (metal bellows) seal in which the flexible element normally rotates. Secondary sealing elements are elastomeric O-rings.

  Materials are specified in Clause 6. Guidance on equivalent materials standards is given in Annex B. Figure 8 depicts a Type B seal. A metal bellows seal offers the advantage of having only static secondary seals. It may be specified instead of the standard Type A seal for low temperature service.

— **Type C** seal is a balanced, inside-mounted, cartridge-design non-pusher (metal bellows) seal in which the flexible element is normally stationary. Secondary sealing elements are flexible graphite.

  Materials are specified in Clause 6. Guidance on equivalent materials standards is given in Annex B. Figure 9 depicts a Type C seal. Bellows seals are inherently balanced. Stationary metal bellows seals are the primary choice for high temperature service.

  The Type C stationary bellows configuration is chosen as standard because of its advantage if the gland plate and shaft lose their perpendicular alignment. In this arrangement, the bellows can deflect to a fixed position to match the rotating face. In a rotating arrangement, Type B, the bellows would have to flex and change positions once per shaft revolution to accommodate the runout of the stationary face; however, rotating metal bellows tend to throw out particulate from between the bellows in coking or other particulate-bearing services. The user should note that rotating bellows seals often have a tendency to vibrate and are, therefore, equipped with dampening tabs or other devices to control vibration. Stationary bellows seals largely avoid this issue. Metal bellows seals offer the advantage of having only static secondary seals. This allows their application in high-temperature services where suitable O-ring elastomers are not available. Metal bellows seals are also a cost-effective alternative for services where chemical resistance or cost of O-ring materials is an issue.

Type A and Type B seals are suitable for temperatures up to 176 °C (350 °F). Type C seals are for high temperatures up to 400 °C (750 °F).

4.1.4 Seal arrangements

There are three seal arrangements, as follows:

— **Arrangement 1**: Seal configurations having one seal per cartridge assembly;

— **Arrangement 2**: Seal configuration having two seals per cartridge assembly, with the space between the seals at a pressure less than the seal chamber pressure.

— **Arrangement 3**: Seal configurations having two seals per cartridge assembly, utilizing an externally supplied barrier fluid at a pressure greater than the seal chamber pressure.

NOTE 1 The principal difference between Arrangement 2 and Arrangement 3 configurations is the concept of containment of leakage versus the elimination of process fluid leakage. Refer to the associated definitions and Annex A flush plan descriptions.

Documents
Document Sharing Hub

Full document details: DIN EN ISO 21049:2005-11

NOTE 2 In Arrangement 2 and Arrangement 3, the containment seal (3.13) can be a conventional wet seal or a dry-running seal. The inner seal utilizes a flush plan typical of Arrangement 1 seals. If the containment seal is a conventional wet seal design, an unpressurized liquid buffer fluid is supplied to the containment seal chamber (3.14). If the containment seal is a dry-running seal, a gas buffer may be used.

New technology designs and sealing methods are also considered, as follows:

— contacting wet (CW) seals: seal design where the mating faces are not designed to intentionally create aerodynamic or hydrodynamic forces to sustain a specific separation gap (refer to definitions);

— non-contacting (NC) seals (whether wet or dry): seal design where the mating faces are designed to intentionally create aerodynamic or hydrodynamic separating forces to sustain a specific separation gap; (refer to definitions) and

— containment seals (CS), whether contacting or non-contacting: seal design with one flexible element, seal ring and mating ring mounted in the containment seal chamber.

Figure 1 places all these concepts in one diagram, providing a comprehensive way to look at their interrelationships.

4.1.5 Seal orientations

Arrangement 2 and Arrangement 3 seals can be in the following three orientations:

— face-to-back: dual seal configuration in which one mating ring is mounted between the two flexible elements and one flexible element is mounted between the two mating rings;

— back-to-back: dual seal configuration in which both of the flexible elements are mounted between the mating rings; and

— face-to-face: dual seal configuration in which both of the mating rings are mounted between the flexible elements.

4.2 Objectives

Shaft sealing systems conforming to this International Standard are intended to meet the following objectives.

a) All seals should operate continuously for 25 000 h without need for replacement;

b) Containment seals should operate for at least 25 000 h without need for replacement (wet or dry seals) at any containment seal chamber pressure equal to or less than the seal leakage pressure switch setting [not to exceed a gauge pressure of 0,07 MPa (0,7 bar) (10 psi)] and for at least 8 h at the seal chamber conditions;

c) All seals should operate for 25 000 h without need for replacement while either complying with local emissions regulations, or exhibiting a maximum screening value of 1 000 ml/m^3 (1 000 ppm vol) as measured by the EPA Method 21, whichever is more stringent.

4.3 Specifying and/or purchasing a sealing system

The data sheet (Annex C) shall be used to convey purchasing requirements. Default requirements are identified therein that allow the purchaser to specify a seal with minimum information. The minimum data required on the data sheet to obtain budgetary pricing on a sealing system is expressed in the seal code. Typical seal codes which can be used are given in Annex D. This assumes all standard defaults (construction features and materials). The minimum information required on the data sheet to purchase a seal with assurance that the selection will satisfy the objectives of 4.2 is the pump data, fluid data and seal specification.

AVA Documents
Document Sharing Hub

Full document details: DIN EN ISO 21049:2005-11

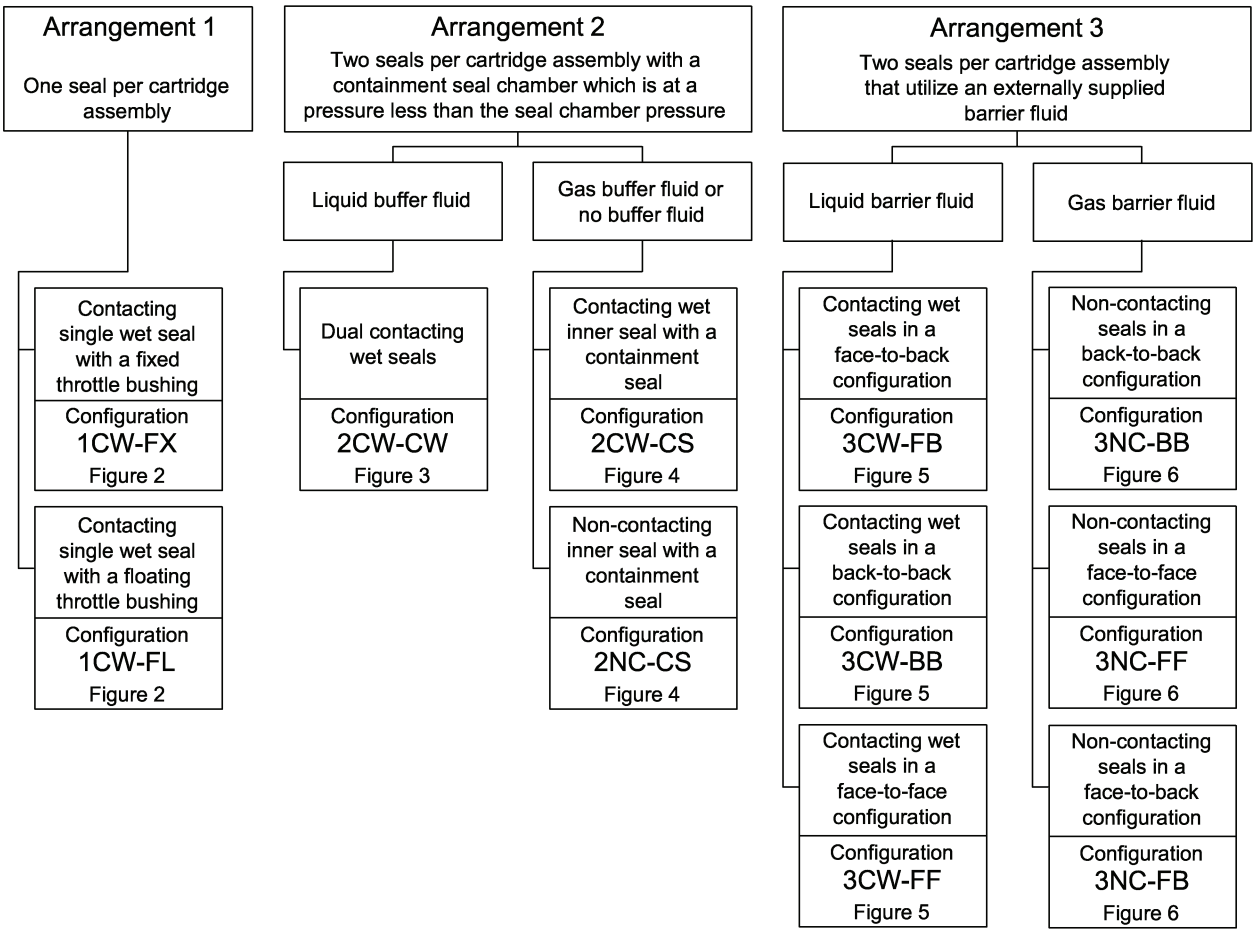

Figure 1 — Seal configurations

Documents
Document Sharing Hub

Full document details: DIN EN ISO 21049:2005-11

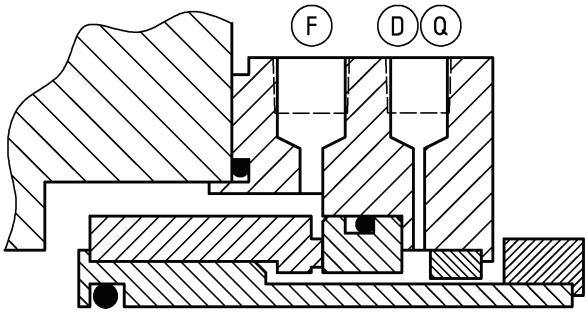

a) 1CW-FX, contacting single wet seal with a fixed throttle bushing

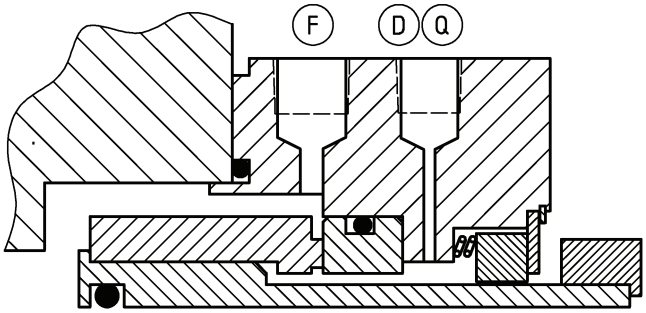

b) 1CW-FL, contacting single wet seal with a floating throttle bushing

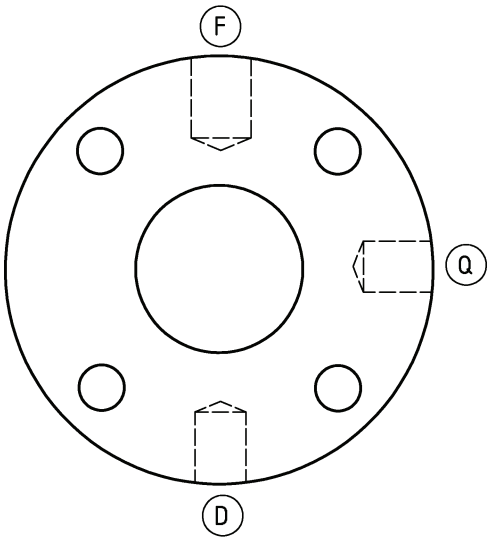

c) Typical gland plate connection orientation

NOTE For connection designations, see 6.1.2.17, Table 1.

Figure 2 — Arrangement 1: One seal per cartridge assembly

Documents
Document Sharing Hub

Full document details: DIN EN ISO 21049:2005-11

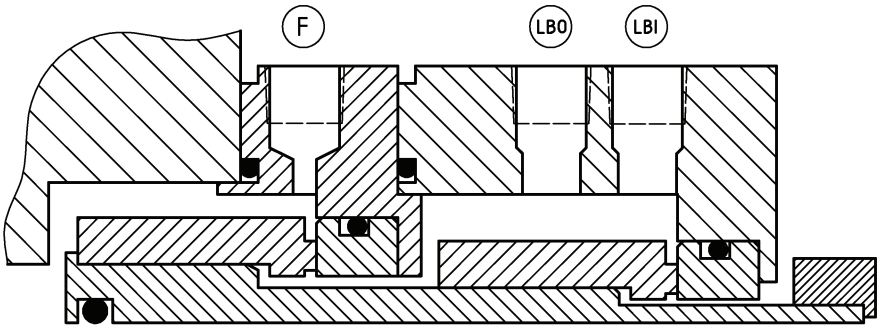

a) 2CW-CW , dual contacting wet seal

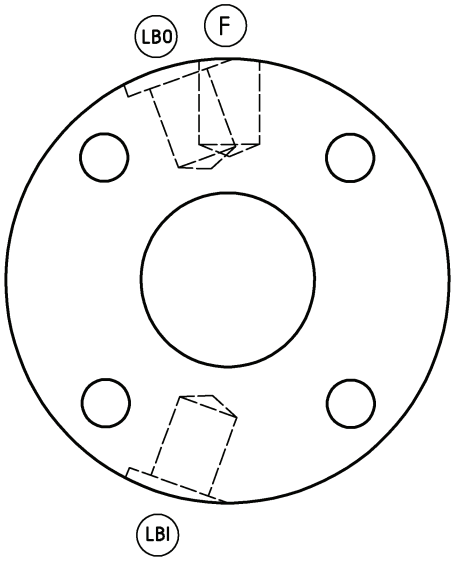

b) Typical gland plate connection orientation

NOTE For connection designations, see 6.1.2.17, Table 1.

Figure 3 — Arrangement 2: Two seals per cartridge asembly with a liquid buffer fluid

Documents
Document Sharing Hub

Full document details: DIN EN ISO 21049:2005-11

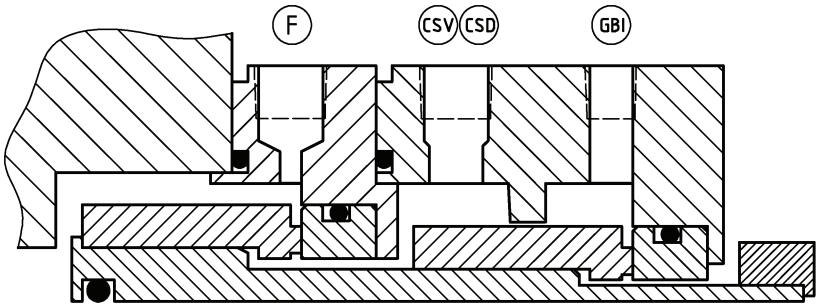

a) 2CW-CS, contacting wet inner seal with a containment seal

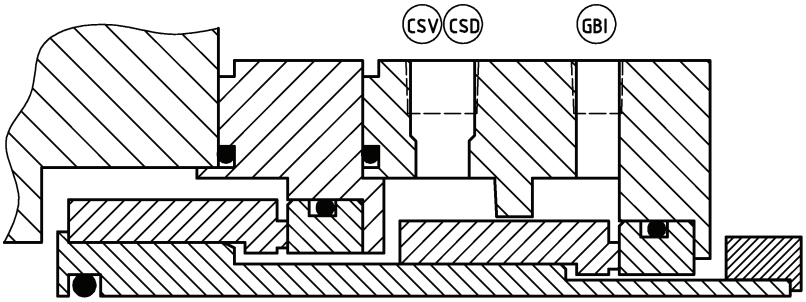

b) 2NC-CS, non-contacting inner seal with a containment seal

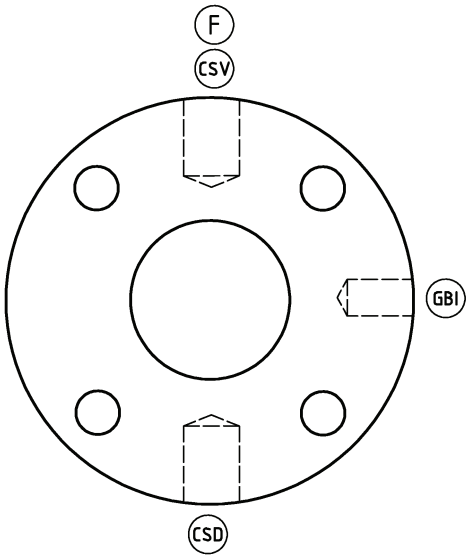

c) Typical gland plate connection orientation for 2CW-CS

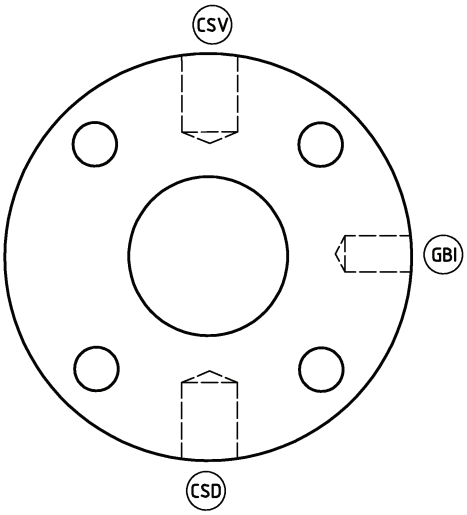

d) Typical gland plate connection orientation for 2NC-CS

NOTE For connection designations, see 6.1.2.17, Table 1.

Figure 4 — Arrangement 2: Two seals per cartridge assembly with or without a gas buffer fluid

Documents
Document Sharing Hub

Full document details: DIN EN ISO 21049:2005-11

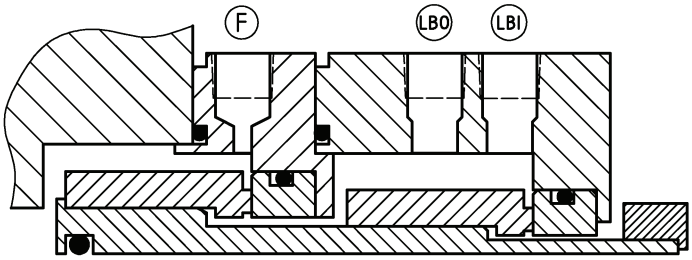

a) 3CW-FB, contacting wet seals in a face-to-back configuration

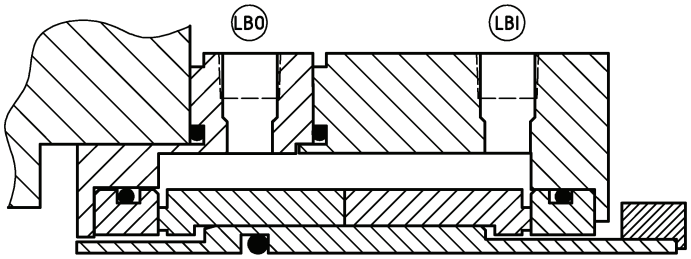

b) 3CW-BB, contacting wet seals in a back-to-back configuration

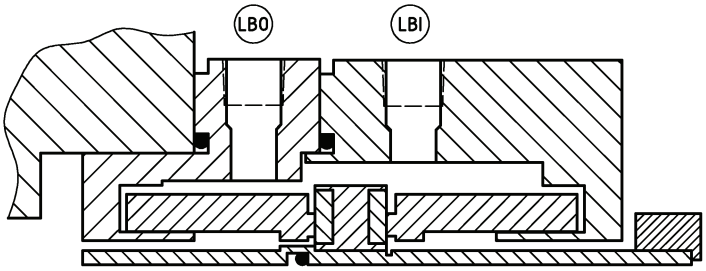

c) 3CW-FF, contacting wet seals in a face-to-face configuration

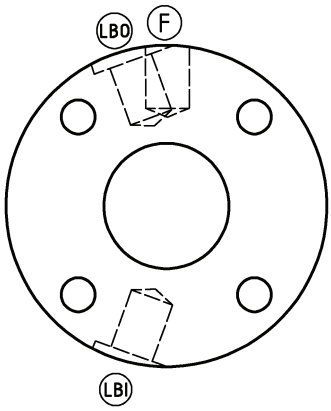

d) Typical gland plate connection orientation

NOTE For connection designations, see 6.1.2.17, Table 1.

Figure 5 — Arrangement 3: Two seals per cartridge assembly with a liquid barrier fluid

Documents
Document Sharing Hub

Full document details: DIN EN ISO 21049:2005-11

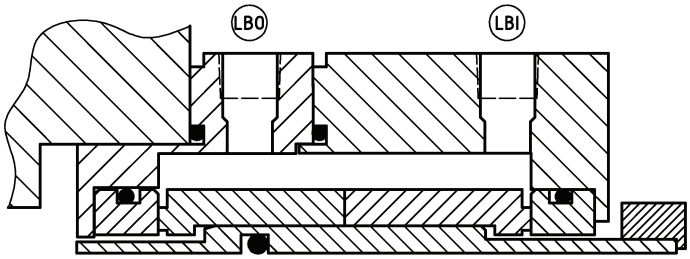

a) 3NC-BB, non-contacting seals in a back-to-back configuration

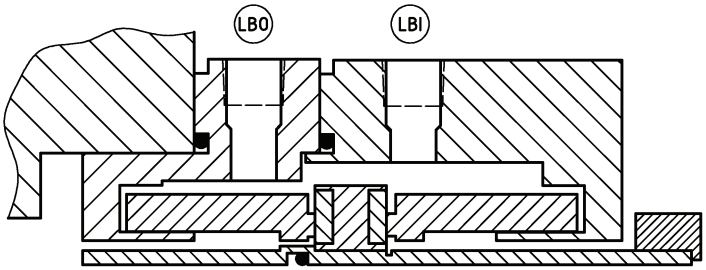

b) 3NC-FF, non-contacting seals in a face-to-face configuration

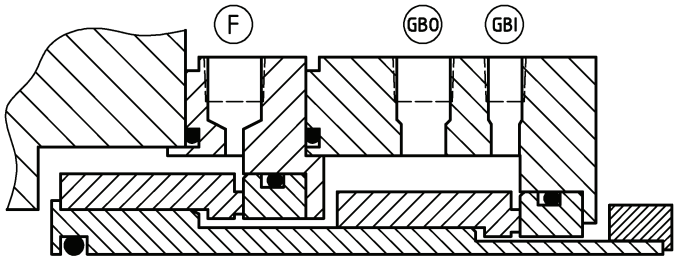

c) 3NC-FB, non-contacting seals in a face-to-back configuration

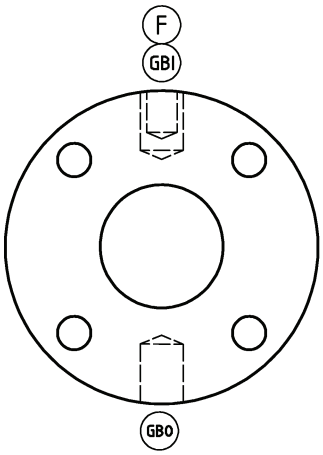

d) Typical gland plate connection orientation

NOTE For connection designations, see 6.1.2.17, Table 1.

Figure 6 — Arrangement 3: Two seals per cartridge assembly with a gas barrier fluid

Documents
Document Sharing Hub

Full document details: DIN EN ISO 21049:2005-11

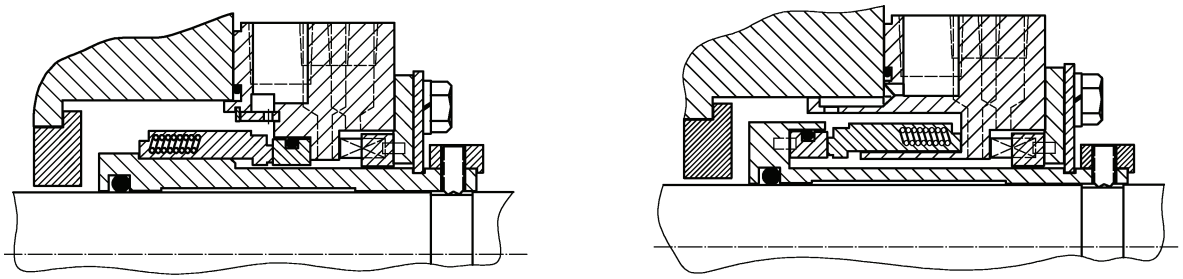

a) Standard (rotating flexible element) b) Alternative (stationary flexible element)

Figure 7 — Arrangement 1 Type A seals

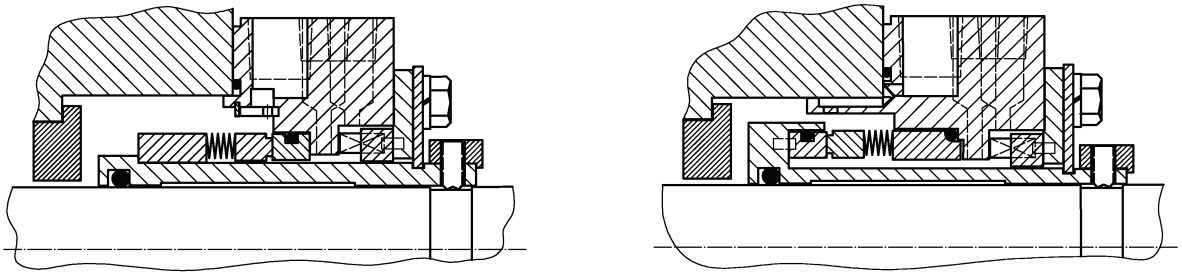

a) Standard (rotating bellows assembly) b) Alternative (stationary bellows assembly)

Figure 8 — Arrangement 1 Type B seals

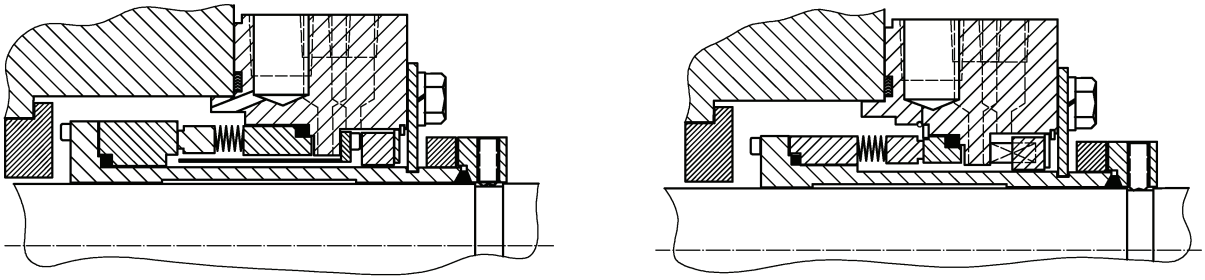

a) Standard (stationary bellows assembly) b) Alternative (rotating bellows assembly)

Figure 9 — Arrangement 1 Type C seals

5 General

5.1 Unit responsibility

Unless otherwise specified, the pump vendor shall have unit responsibility for the seal system if the seal system is purchased as part of a pump system. If not purchased as part of a pump system, the seal vendor shall have unit responsibility for the seal system. The vendor who has unit responsibility shall ensure that all sub-vendors comply with the requirements of this International Standard. Annex E specifies the interface responsibilities of the pump and seal vendors.

AVA Documents
Document Sharing Hub

Full document details: DIN EN ISO 21049:2005-11

5.2 Dimensions

- The purchaser shall specify whether data, drawings, hardware (including fasteners), and equipment supplied to this International Standard shall use SI units or US Customary units.

6 Design requirements

6.1 Common design requirements (all categories)

6.1.1 General information

6.1.1.1 All mechanical seals, regardless of type or arrangement, shall be of the cartridge design, without hook sleeves.

ISO 13709 already requires that pumps be designed to enable seal removal without disturbing the driver. If pumps are being retrofitted that are not back-pullout design, it should be verified that adequate shaft end spacing exists.

- **6.1.1.2** If specified, a stationary flexible element shall be supplied for Type A or Type B seals.

NOTE The rotating flexible element was selected as the standard for pusher seals because it allows application of a smaller seal.

- **6.1.1.3** If specified, a rotating flexible element shall be supplied for Type C seals.

6.1.1.4 The cartridge seal shall incorporate a setting device (such as setting plates) that is sufficiently robust to enable the assembly to be pushed or pulled during installation, rotor adjustment or disassembly without transferring radial or axial load to the seal faces.

6.1.1.5 A stationary flexible-element seal shall be provided if seal-face surface speed at the mean diameter of the seal face exceeds 23 m/s (4 500 ft/min).

NOTE As speed increases, the flexible element of a rotating seal flexes at a correspondingly faster rate to keep the seal faces closed. At very high speeds (and for large seal sizes), the forces required to keep the faces closed become so large that they negatively affect the seal life.

Consideration should be given for requiring a stationary flexible element if:

— balance diameter exceeds 115 mm (4,5 in) (see 6.1.1.7);

— pump case or gland plate distortion and misalignment exist due to pipe loads, thermal distortion, pressure distortion, etc.;

— the perpendicularity of the seal chamber mounting surface to the shaft is a problem, aggravated by high rotational speed; or

— the seal chamber face runout requirements described in 6.1.2.13 cannot be met (as found with some slender-shaft, multi-stage pump designs).

6.1.1.6 This International Standard does not cover the design of the component parts of mechanical seals; however, the design and materials of the component parts shall be suitable for the specified service conditions. The maximum allowable working pressure shall apply to all parts referred to in the definition of pressure casing.

NOTE It is not normal practice for seals to be rated for the maximum allowable working pressure for the pump in which they are installed.

6.1.1.7 The seal manufacturer shall design the seal faces and seal balance ratio to minimize seal-face-generated heat consistent with optimum life expectations in 4.2 and emissions limit requirements. The seal balance ratio measurement points shall be as shown in Figure 10.

AVA Documents
Document Sharing Hub

Full document details: DIN EN ISO 21049:2005-11

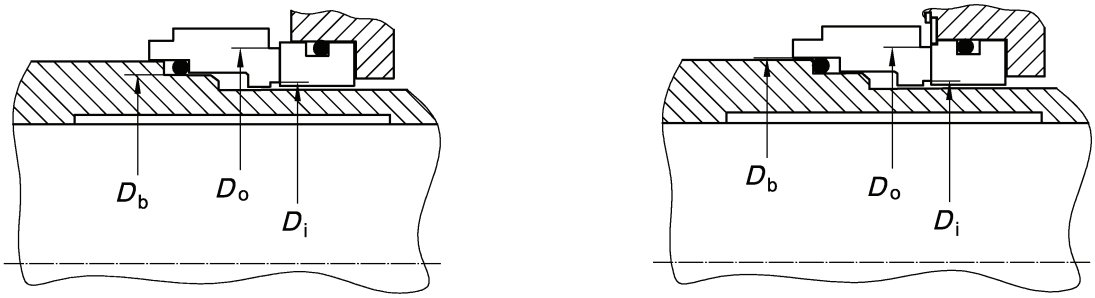

a) Seal with higher pressure at outer diameter

b) Seal with higher pressure at inner diameter

Figure 10 — Balance ratio measurement points

For seals pressurized at the outside diameter, the seal balance ratio, B, is defined by the simplified equation:

$$B = \frac{(D_o{}^2 - D_b{}^2)}{(D_o{}^2 - D_i{}^2)}$$

where

D_o is the seal face outside diameter;

D_i is the seal face inside diameter;

D_b is the balance diameter of the seal.

For seals pressurized at the inner diameter, the seal balance ratio is defined by the equation:

$$B = \frac{(D_b{}^2 - D_i{}^2)}{(D_o{}^2 - D_i{}^2)}$$

where

D_o is the seal face outside diameter;

D_i is the seal face inside diameter;

D_b is the balance diameter of the seal.

Balance diameter varies with seal design, but for spring pusher seals under outer-diameter pressure, it is normally the diameter of the sliding contact surface of the inner diameter of the dynamic O-ring; for spring pusher seals under inner-diameter pressure, it is normally the diameter of the sliding contact surface of the outer diameter of the dynamic O-ring; for welded metal bellows-type seals, the balance diameter is normally the mean diameter of the bellows, but this can vary with pressure.

Temperature control plays an important role in the success of a mechanical seal. Every seal generates heat at the seal faces. In some cases, heat soak from the fluid pumped should also be controlled. Heat soak is the heat transferred from the pump and pumped fluid to fluid in the seal chamber. For example, if a particular fluid must be maintained at 60 °C (140 °F) to maintain a satisfactory vapour pressure margin and the pump operating temperature is 146 °C (295 °F), heat would be transferred through the pump case into the seal chamber. The combined heat load (soak- and face-generated) should be carried away by the flush. Annex F provides guidance on the calculation of heat soak and seal-generated heat.

NOTE 1 The calculated heat load allows sizing of the cooling system, determination of start-up and running torques, determination of flush rates, and boiling point margins. Normally, seal flush rates are based upon a maximum allowable 5 °C (10 °F) temperature rise, considering all heat inputs. Certain seal chamber arrangements such as dead-ended and taper bore boxes have other considerations.

AVA Documents
Document Sharing Hub

Full document details: DIN EN ISO 21049:2005-11

NOTE 2 Starting torque, seal power and seal-generated heat can be significant issues for small pump drivers, seals at or above the balance diameter and pressure boundaries of this International Standard, and for Arrangement 3 seals.

6.1.1.8 The seal supplied shall be capable of handling normal and transient differential axial movement between the rotor and stator.

NOTE Maximum axial movement is of particular concern in hot multi-stage pumps. During start-up conditions, it is not unusual for a large amount of differential thermal growth to occur between the shaft and casing. This differential can exceed the capabilities of some seals. Axial movement is also a concern in some vertical pump designs that rely on the motor bearing for thrust positioning (i.e. in-line pumps without pump bearing housings and vertical can pumps). In certain conditions, process pressure can result in an upward thrust. Shaft axial movement is only limited by motor-bearing axial float in these cases.

6.1.1.9 O-ring sealing surfaces, including all grooves and bores, shall have a maximum surface roughness (Ra) of 1,6 µm (63 µin) for static O-rings and 0,8 µm (32 µin) for the surface against which dynamic O-rings slide. Bores shall have a minimum 3 mm (0,12 in) radius or a minimum 1,5 mm (0,06 in) chamfered lead-in for static O-rings and a minimum 2 mm (0,08 in) chamfered lead-in for dynamic O-rings. Chamfers shall have a maximum angle of 30°.

6.1.1.10 O-ring grooves shall be sized to accommodate perfluoroelastomer O-rings.

NOTE Some perfluoroelastomers have a greater thermal expansion than most other O-ring materials, such as fluoroelastomer. Installing a perfluoroelastomer in a groove designed for fluoroelastomer will lead to damage to the O-ring. On the other hand, fluoroelastomer O-rings function properly in the larger perfluoroelastomer grooves. Choosing the wider groove as a standard eliminates this potential cause of O-ring failure and reduces the number of necessary spares. Note that thermal expansion damage in perfluoroelastomer O-rings is often confused with damage due to chemical-induced swelling of the O-rings, and vice versa.

6.1.1.11 For vacuum services, all seal components shall be designed with a positive means of retaining the sealing components to prevent them from being dislodged (see Figure 11). The seal design shall be adequate to seal under vacuum conditions when the pump is not operating (see 6.1.2.14).

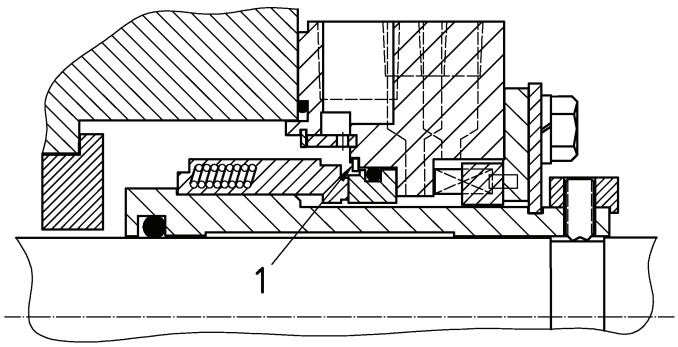

Key

1 retaining feature as required in 6.1.1.11

Figure 11 — Positive retention of seal components in vacuum services

Documents
Document Sharing Hub

Full document details: DIN EN ISO 21049:2005-11

6.1.2 Seal chamber and gland plate

6.1.2.1 Gland plates shall be provided by the seal manufacturer.

6.1.2.2 Unless otherwise specified, seal chambers shall be provided by the pump manufacturer.

6.1.2.3 Seal chambers are one of three types: traditional, externally mounted or internally mounted. Seal chambers are not required to accommodate packing. Figure 12 shows the three types of seal chamber.

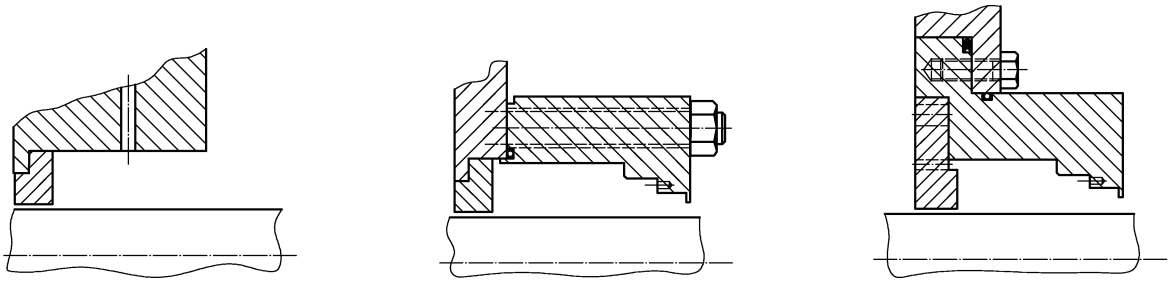

a) Traditional **b) Externally mounted** **c) Internally mounted**

Figure 12 — Seal chamber types

6.1.2.4 The standard seal chamber is the traditional type (cylindrical chamber, integral to the casing of the pump) supplied by the pump manufacturer.

Category 1 seals shall be designed to fit into the dimensional envelope defined by ISO 3069 Type C or by ASME B73.1 and ASME B73.2.

Category 2 and Category 3 seals shall be designed to fit into the dimensional envelope of ISO 13709.

Seal chamber designs that utilize all the design features of this International Standard should result in improved reliability and general standardization of components. Reduced seal radial clearance requires the user to address flush plans and construction requirements for non-compliant seals.

The reliability of a mechanical seal is affected by the radial clearance between its rotating parts and the seal chamber bore. Meeting the minimum radial clearance requirements of this International Standard is particularly important when sealing difficult services, such as those with significant solids content or those that can result in excessive seal face temperature. Alternative seal chamber designs used in some chemical industry pumps, such as large-bore or tapered seal chambers with flow modifiers, may eliminate the need for a flush or enhance performance based on design of the chamber.

It is expected that the majority of Category 1 seals will be applied to ISO 2858, ASME B73.1 and ASME B73.2 pumps, and the majority of Category 2 and Category 3 seals will be installed in ISO 13709 applications. However, there is a recognized possibility that Category 1 seals may be installed in ISO 13709 applications, and Category 2 and Category 3 seals, in certain configurations, may be installed in ISO 2858, ASME B73.1 and ASME B73.2 pumps. Careful consideration should be given to correctly applying seal categories into pump types or services for which they are not intended.

- **6.1.2.5** If specified, a bolt-on seal chamber provided by the seal manufacturer shall be supplied.

6.1.2.6 The minimum radial clearance between the rotating components of the seal and the stationary surfaces of the seal chamber and gland plate shall be 3 mm (1/8 in) except as noted in 8.6.2.3 (circulation devices), 7.2.5.1, and 7.2.6.1 (Arrangement 2 containment seal chamber bushings).

NOTE The 3 mm (1/8 in) radial clearance might not be possible in small pump sizes and ISO 3069 Type C seal chambers. See 6.1.2.4.

Documents
Document Sharing Hub

Full document details: DIN EN ISO 21049:2005-11

6.1.2.7 All bolt and stud stresses shall be in accordance with the pressure design code at the maximum allowable working pressure. Four studs shall be used. The diameter of the studs shall be in accordance with the seal chamber dimensional references in 6.1.2.4. Larger studs shall be furnished only if required to meet the stress requirements of EN 13445 or ASME VIII, or to sufficiently compress spiral-wound gaskets in accordance with ASME B16.20.

6.1.2.8 The maximum allowable working pressure of the seal pressure casing shall be equal to or greater than that of the pump pressure casing on which it is installed. The seal pressure casing shall have a corrosion allowance of 3 mm (1/8 in), and shall have sufficient rigidity to avoid any distortion that would impair seal operation, including distortion that may occur during tightening of the bolts to set gasketing. If approved by the purchaser, a smaller corrosion allowance may be acceptable for some higher alloy materials.

The following shall also apply.

a) Unless otherwise specified, gland plates shall be provided with holes (not slots) for attachment studs.

b) Provisions shall be made for centring the seal gland plates and/or chamber with either an inside- or an outside-diameter register fit. The register-fit surface shall be concentric to the shaft and shall have a total indicated runout of not more than 0,125 mm (0,005 in), see Figure 13. The rabbet diametrical clearance shall be H7/f7 in accordance with ISO 286-2.

c) A shoulder at least 3 mm (1/8 in) thick shall be provided in the seal gland plate to prevent the stationary element of the mechanical seal from dislodging as a result of chamber pressure, see Figure 14.

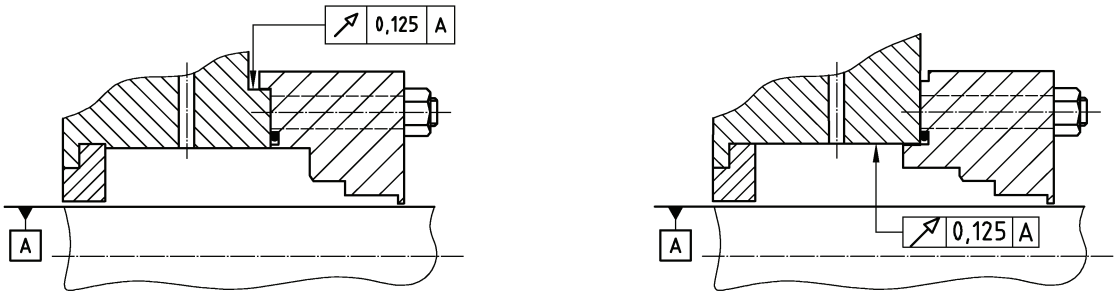

a) Outside diameter fit **b) Inside diameter fit**

Figure 13 — Seal chamber register concentricity

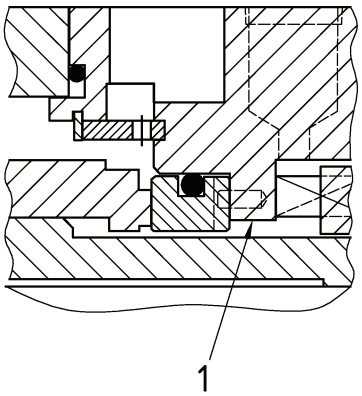

Key

1 seal gland plate shoulder

Figure 14 — Section showing seal gland plate shoulder

Documents
Document Sharing Hub

Full document details: DIN EN ISO 21049:2005-11

6.1.2.9 Stress values used in the design of the pressure casing for any material shall not exceed the values used in the design of the pump casing on which it is installed. Where the original pump design values are not available, the stress values shall be in accordance with ISO 13709.

6.1.2.10 Manufacturing data report forms, third party inspections, and stamping, such as those specified in codes such as ASME VIII, are not required.

6.1.2.11 The use of threaded holes in pressurized parts shall be minimized. To prevent leakage in pressure sections of casing, metal equal in thickness to at least half the nominal bolt diameter, in addition to any corrosion allowance, shall be left around and below the bottom of drilled and tapped holes.

6.1.2.12 Threading details for bolting for pressure casings shall be in accordance with ISO 261, ISO 262, ISO 724 and ISO 965, or with ASME B1.1. Metric fine and UNF threads shall not be used.

Unless otherwise specified, studs shall be used rather than other fasteners such as cap screws for connection of seal chamber to pump and seal gland plate to pump or seal chamber.

Stud markings, if provided, shall be located on the nut end of the exposed stud.

Adequate clearance shall be provided at bolting locations to permit the use of socket or box wrenches.

NOTE Adequate clearance to use socket or box wrenches at gland plate bolting locations might not be feasible on small pumps.

6.1.2.13 The seal manufacturer shall design for seal chamber face runout (TIR) up to 0,5 µm/mm (0,000 5 in/in) of seal chamber bore, see Figure 15. Some multistage, slender-shaft designs may not be able to meet the requirements of this clause (see 6.1.1.5).

NOTE Mechanical seal performance can be adversely affected by excessive runout at the mechanical seal chamber. Seal chamber face runout or seal chamber interface runout is a measure of the squareness of the pump shaft with respect to the face of the seal chamber mounting.

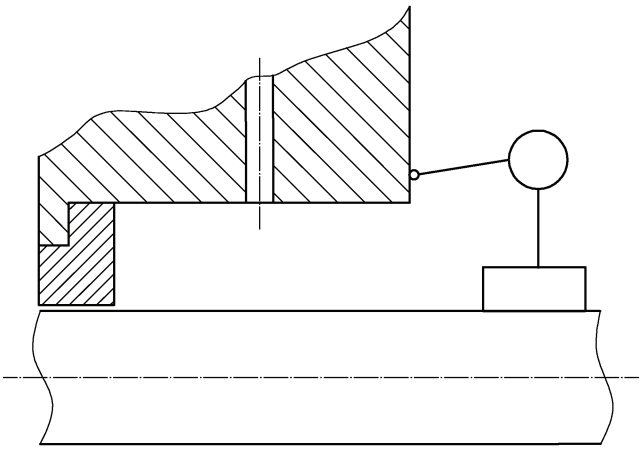

Figure 15 — Seal chamber face runout

6.1.2.14 For Arrangement 1 and Arrangement 2, seal chamber pressure and support systems for contacting wet seals (excluding containment seals) shall be designed for a margin of not less than 30 % between seal chamber pressure and maximum fluid vapour pressure, or a 20 °C (36 °F) product temperature margin based on the maximum process fluid temperature.

Documents
Document Sharing Hub

Full document details: DIN EN ISO 21049:2005-11

Pumps that develop low differential pressure and pumps that handle high vapour pressure fluids may not achieve the required margins. If seal chamber conditions do not meet the specified margins, the seal manufacturer shall

a) confirm the adequacy of the seal selection and flush plan based on the specified fluid,

b) recommend the seal chamber operating conditions (minimum pressure and maximum temperature) that will result in a seal installation that has a high probability of achieving 3 years of uninterrupted service,

c) furnish the seal gland plate or seal chamber with a second flush connection to permit measurement of seal chamber pressure directly, and

d) furnish a distributed flush system unless space limitations preclude its use.

During operation, the seal chamber pressure shall be at least 35 kPa (0,35 bar) (5 psi) above atmospheric pressure. This is particularly important if the inlet pressure to the pump is below atmospheric.

The user should be aware that there may be other criteria that should be used to establish seal chamber conditions to achieve target reliability. An example is water at a temperature above 82 °C (180 °F), which requires cooling to maintain adequate fluid lubricity (see Annex A).

NOTE For contacting wet seal designs, maintaining an adequate vapour pressure margin helps protect the seal faces against localized boiling of the process fluid at the seal faces. Boiling of the process fluid at the seal faces can cause loss of seal-face lubrication and subsequent seal failure. Low-density fluids are some of the most troublesome fluids to seal and account for a high percentage of seal repairs. These margins can be achieved in many ways. For example, using one or a combination of the following options can provide a vapour pressure and product temperature margin for reliable seal performance. The application of these solutions is usually the result of mutual agreement between the purchaser, seal manufacturer and pump manufacturer:

— lowering the seal chamber fluid temperature by cooling the flush fluid;

— raising the seal chamber pressure by removing the back wear ring and plugging impeller balance holes;

— utilizing an external flush fluid; and/or

— raising the seal chamber pressure through the use of a close-clearance (floating) throat bushing.

Lowering the flush fluid temperature (seal chamber fluid temperature) is always preferable to pressurizing the seal chamber by using a close clearance throat bushing. Bushing wear inevitably results in a decreased seal chamber pressure and margin over vapour pressure.

Some applications may not need complicated seal flush systems. A generic example of this is cooling water service. Assuming the water is at 38 °C (100 °F) and an atmospheric pump suction and seal chamber pressure exists, the absolute vapour pressure would be 6,5 kPa (0,065 bar) (0,94 psi). The absolute vapour pressure at 58 °C (136 °F) would be about 18,6 kPa (0,186 bar) (2,7 psi). Ample product temperature margin would be present in the seal chamber to provide good seal life without seal flush fluid cooling or pressurizing the seal chamber.

6.1.2.15 If supplied, throat bushings shall be renewable and designed so that they cannot be forced out by hydraulic pressure.

Throat bushings can be used for any or all of the following purposes along with the appropriate flush plans:

— to increase or decrease seal chamber pressure;

— to isolate the seal chamber fluid; and/or

— to control the flow into or out of the seal chamber.

See also Annex A for additional guidance concerning the use of throat bushings.

● **6.1.2.16** If specified, or if recommended by the seal manufacturer, close-clearance floating throat bushings shall be furnished. Materials and clearances shall be suitable for the service and approved by the purchaser.

AVA Documents
Document Sharing Hub

Full document details: DIN EN ISO 21049:2005-11

6.1.2.17 Data sheet-specified gland plate and seal chamber connections shall be identified by symbols permanently marked (e.g. stamped or cast) on the component. The symbol, size and location in Table 1 shall be used (see Figure 16 for the relative axial position of the process and atmospheric connections). Where appropriate, the letters I and O (In and Out) shall be used in conjunction with these markings. For horizontal pumps, 0° is vertical on top. For vertical pumps, the location of the flush (F) connection defines 0° (see Figure 2 to Figure 6). Where the size of the pump or seal gland precludes the inclusion of the required connection on the seal gland, the seal vendor shall advise the pump vendor to include the necessary connection on the pump or seal chamber. If tangential porting is used, the location of the drilled port into the seal chamber shall comply with Table 1. However, the associated locations for the gland plate tapped connections may differ from those specified in Table 1.

The lack of space for tap and port connections in the seal chamber area may require that these be included within the pump manufacturer's scope of supply. Annex E specifies the interface responsibilities of the pump and seal vendors.

Differential sizing minimizes the possibility of improper assembly, particularly during maintenance in the field. The purchaser should be aware that the specified connection size and location in Table 1 might not be practical on smaller pumps.

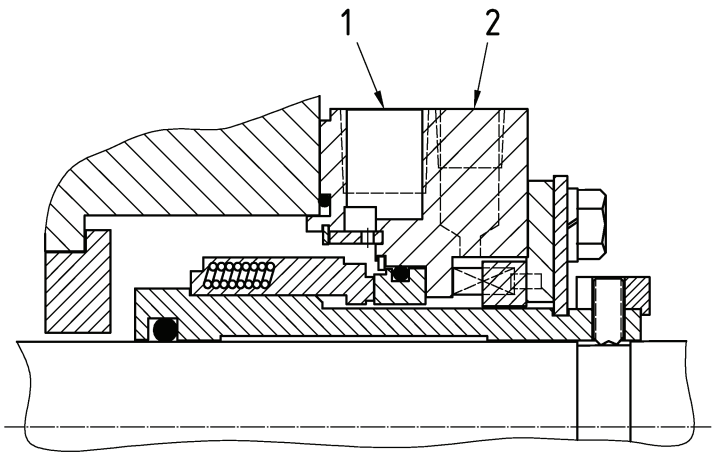

Key

1 process side

2 atmospheric side

Figure 16 — Mechanical seal piping connections

Documents
Document Sharing Hub

Full document details: DIN EN ISO 21049:2005-11

Table 1 — Symbols and size for seal chamber and gland plate connections

Seal configuration	Symbol	Connection	Location	Type	Size [a]		Connection required [g]
					Category 1	Categories 2 and 3	
1CW-FX 1CW-FL	F FI FO D Q H C	flush flush in (Plan 23 only) flush out (Plan 23 only) drain quench heating cooling	0 180 0 180 90 — —	process process process atmospheric atmospheric utility utility	1/2 [c] 1/2 [c] 1/2 [c, f] 3/8 [e] 3/8 [e] 1/2 [c] 1/2 [c]	1/2 1/2 1/2 3/8 3/8 1/2 1/2	required WS WS required required WS WS
2CW-CW	F LBI LBO D Q	flush (inner seal) liquid buffer fluid in liquid buffer fluid out drain (outer seal) quench (outer seal)	0 180 0 180 90	process process process atmospheric [b] atmospheric [b]	1/2 [c] 1/2 [d] 1/2 [d] 3/8 [e] 3/8 [e]	1/2 1/2 [d] 1/2 [d] 3/8 3/8	required required required WS WS
2CW-CS	F FI FO GBI CSV CSD D Q	flush (inner seal) flush in (Plan 23 only) flush out (Plan 23 only) gas buffer fluid in containment seal vent containment seal drain drain (outer seal) quench (outer seal)	0 180 0 90 0 180 180 90	process process process process process process atmospheric [b] atmospheric [b]	1/2 1/2 [c] 1/2 [c, f] 1/4 1/2 1/2 3/8 [e] 3/8 [e]	1/2 1/2 1/2 1/4 1/2 1/2 3/8 3/8	required WS WS WS required required WS WS
2NC-CS	GBI CSV CSD D Q	gas buffer fluid in containment seal vent containment seal drain drain (outer seal) quench (outer seal)	90 0 180 180 90	process process process atmospheric [b] atmospheric [b]	1/4 1/2 1/2 3/8 [e] 3/8 [e]	1/4 1/2 1/2 3/8 3/8	WS required required WS WS
3CW-FB 3CW-FF 3CW-BB	F LBI LBO D Q	flush (seal chamber) liquid barrier fluid in liquid barrier fluid out drain (outer seal) quench (outer seal)	0 180 0 180 90	process barrier barrier atmospheric [b] atmospheric [b]	1/2 1/2 [d] 1/2 [d] 3/8 [e] 3/8 [e]	1/2 1/2 [d] 1/2 [d] 3/8 3/8	WS required required WS WS
3NC-FF 3NC-BB 3NC-FB	F GBI GBO D Q V	flush (seal chamber) gas barrier fluid in gas barrier fluid out drain (outer seal) quench (outer seal) process vent	0 0 180 180 90 0	process barrier barrier atmospheric [b] atmospheric [b] process	1/2 1/4 1/2 3/8 [e] 3/8 [e] 1/2	1/2 1/4 1/2 3/8 3/8 1/2	WS required WS WS WS WS

[a] All sizes are NPT tapered thread connections, unless the purchaser specifies the equivalent ISO 7 thread.

[b] These connections are rarely provided because they are only required when a throttle bushing is provided. A throttle bushing is not provided with standard Arrangement 2 and 3 configurations.

[c] A 3/8 NPT connection may be used if 1/2 NPT is not possible due to space constraints.

[d] 1/2 NPT required for shaft diameters 63,5 mm (2,5 in) or smaller, 3/4 NPT for larger shaft sizes.

[e] A 1/4 NPT connection may be used if 3/8 NPT is not possible due to space constraints.

[f] A tangential connection is preferred for the outlet.

[g] WS = Connection is provided only when the appropriate flush plan is specified.

6.1.2.18 Threaded connection points shall be plugged with solid round or solid hexagonal head plugs furnished in accordance with the dimensional requirements of ASME B16.11. Square head plugs shall not be used, due to their tendency to be damaged during installation and removal. All plugs shall be of the same material as the gland plate. An anaerobic lubricant/sealant shall be used on the threads to ensure the threads are vapour-tight. PTFE tape, anti-seize or anti-galling compounds shall not be used on gland plate connections because of the possibility of fouling the seal.

AVA Documents
Document Sharing Hub

Full document details: DIN EN ISO 21049:2005-11

Category 1 seal gland plates and seal chambers may not be able to meet this International Standard plug requirement due to space constraints. In such cases, flush-mount socket head plugs are acceptable.

NOTE 1 ASME B16.11 is referenced to prevent the supply of hollow or cored plugs; failures of such plugs have occurred within the industry.

NOTE 2 The head on a pipe plug interferes with the installation and actual ability to fit on many smaller Category 1 pumps if the bearing bracket inner diameter is close in size to the gland plate outer diameter. Also, a head on the plug utilized on the seal chamber port can interfere with the back side of the gland plate due to the limited axial space.

6.1.2.19 All piping or tubing connections shall be suitable for the hydrostatic test pressure of the seal chamber or gland plate to which they are attached.

6.1.2.20 Gland plates and/or seal chambers for contacting wet seals shall be designed such that the seal chamber and piping system is self-venting during start-up and operation through the piping system. Designs, other than Plan 23, requiring manual seal chamber venting shall be approved by the purchaser. The following shall apply:

a) On small horizontal pumps where the elevation of the discharge nozzle is not high enough to achieve a continuously rising Plan 11 flush line, then the connection may be located in the process piping upstream of the check valve if approved by the purchaser.

b) The seal chamber or gland plate shall have a port no less than 3 mm (1/8 in) above the seal faces to allow the removal of trapped gas if contacting wet seal arrangements are vertically oriented. This port shall be uppermost in the chamber (see Figure 17). This applies to ports for both sets of faces in Arrangement 2 (2CW-CW configuration) and the outer seal face of Arrangement 3 contacting wet seals when they are vertically oriented.

c) Horizontal or vertical pumps having a flush Plan 23 or vertical pumps having flush Plans 11, 21, 31 and 41 shall be provided with a separate vent connection in the piping. Vertical pumps having flush Plan 2 shall have a vent connection in the gland plate. Designs, other than these, requiring manual seal chamber venting require purchaser's approval.

d) Low-volume seal flush systems that have positive flow due to differential pressures within the pump may not require manual venting (i.e. a short Plan 11 or Plan 13 on a small pump). Entrained gas will quickly purge from the piping and seal chamber upon start-up of the pump.

e) Venting of the seal chamber for Arrangement 3 non-contacting seals prior to start-up and during operation may be necessary to avoid the collection of gas in the pump.

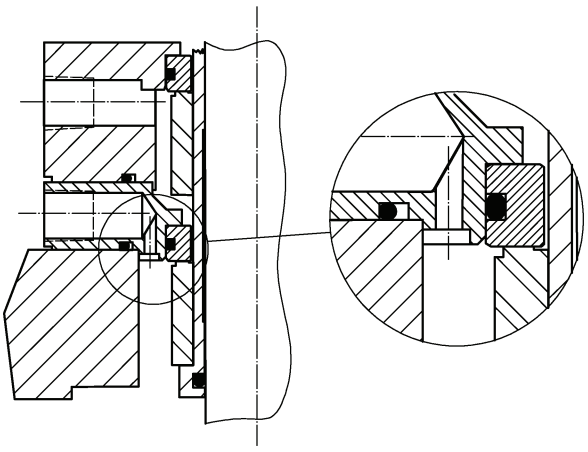

Figure 17 — Seal chamber/gland plate for vertical pumps

Documents
Document Sharing Hub

Full document details: DIN EN ISO 21049:2005-11

6.1.2.21 Drilled passages shall be sized for the application and shall have a minimum diameter of 5 mm (3/16 in).

6.1.2.22 The diametrical clearance at a fixed throttle bushing bore shall not be more than 0,635 mm (0,025 in) for sleeve diameters up to 50 mm (2 in). For larger diameters, the maximum diametrical clearance shall be 0,635 mm (0,025 in) plus 0,127 mm (0,005 in) for each additional 25 mm (1 in) of diameter or fraction thereof.

6.1.2.23 Floating carbon throttle bushings shall have a sleeve clearance as shown in Table 2.

Table 2 — Floating carbon throttle bushing diametrical clearances

Sleeve diameter		Maximum diametrical clearance at pumping temperature	
mm	(in)	mm	(in)
0 to 50	(0 to 2,00)	0,18	(0,007)
51 to 80	(2,01 to 3,00)	0,225	(0,009)
81 to 120	(3,01 to 4,75)	0,28	(0,011)

- **6.1.2.24** If specified, heating jackets or inserts shall be provided on seal chambers. Heating requirements shall be agreed between the purchaser, vendor and seal manufacturer.

- **6.1.2.25** If specified by the purchaser, or if recommended by the seal manufacturer, a flush connection to the process side of the seal chamber shall be provided in Arrangement 3 configurations. Some Arrangement 3 configurations may require a flush on the process fluid side of the seal chamber to isolate the process fluid from the seal parts or assist in the heat removal from the inner seal. Toxic and/or difficult-to-seal applications may utilize a flush in the seal chamber in addition to an Arrangement 3 seal.

6.1.2.26 The supply of flush tap and port connections shall satisfy the requirements in 5.1. The lack of space for tap and port connections off the gland plate may require that these be included within the pump manufacturer's scope of supply, if approved by the purchaser.

6.1.3 Cartridge seal sleeves

6.1.3.1 Seal sleeves shall be furnished by the seal manufacturer. The sleeve shall be sealed at one end. The seal sleeve assembly shall extend beyond the outer face of the seal gland plate.

NOTE Leakage between the shaft and the sleeve thus cannot be confused with leakage through the mechanical seal.

6.1.3.2 The seal manufacturer shall obtain the shaft diameter and tolerance from the pump manufacturer and ensure a shaft-to-sleeve fit of F7/h6 in accordance with ISO 286-2. This correlates to a clearance of 0,020 mm (0,000 8 in) to 0,093 mm (0,003 7 in) for the range of seal sizes covered by this International Standard, and varies as a function of diameter. The intent is to minimize sleeve runout (see Figure 18), while allowing for ease of assembly/disassembly. Shrink disks typically require tighter clearances, and should follow the shrink-disk manufacturer’s design criteria (see Figure 19).

ISO 13709 requires a shaft diameter tolerance of h6, however special cases may exist in which pumps are supplied with shaft diameter tolerances outside this. In such cases, the seal manufacturer shall ensure an appropriate fit.

Documents
Document Sharing Hub

Full document details: DIN EN ISO 21049:2005-11

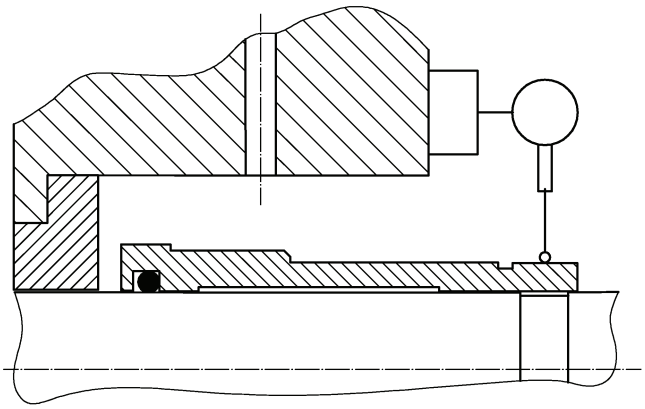

Figure 18 — Seal sleeve runout

6.1.3.3 Sleeves shall have a shoulder (or shoulders) to positively locate the rotating flexible element.

6.1.3.4 Unless otherwise specified, shaft-to-sleeve sealing devices shall be elastomeric O-rings or flexible graphite rings. Metallic sealing devices are often unreliable, damage the shaft and make disassembly difficult. Sealing devices should be softer than the shaft.

6.1.3.5 Shaft-to-sleeve O-ring seals shall be located at the impeller end of the sleeve. For shafts that require the O-ring to pass over the threads, at least 1,6 mm (1/16 in) radial clearance shall be provided between the threads and the internal diameter of the O-ring, and the diameter transition shall be radiused or chamfered (see 6.1.1.9) to avoid damage to the O-ring.

NOTE This location prevents pumpage from accumulating under the sleeve and making disassembly difficult.

6.1.3.6 Shaft-to-sleeve sealing devices located at the outboard end of the sleeve shall be captured between the sleeve and the shaft.

NOTE Flexible graphite is commonly used on metal bellows seals located on the outboard end of the sleeve.

6.1.3.7 Sleeves shall have a minimum radial thickness of 2,5 mm (0,100 in) at their thinnest section, such as under seal-setting plate grooves.

The sleeve thickness in the area of component drive set screws shall be in accordance with Table 3.

NOTE 1 The sleeve thickness in the proximity of set-screw locations prevents sleeve distortion due to tightening of the set screws.

NOTE 2 Excessively thin sleeves distort easily.

Table 3 — Minimum sleeve thickness in the area of component-drive set screws

Shaft diameter		Minimum sleeve radial thickness	
mm	(in)	mm	(in)
< 57	(< 2,250)	2,5	(0,100)
57 to 80	(2,250 to 3,250)	3,8	(0,150)
> 80	(> 3,250)	5,1	(0,200)

Documents
Document Sharing Hub

Full document details: DIN EN ISO 21049:2005-11

6.1.3.8 The sleeve shall be machined and finished throughout its length such that the bore and outside diameter are concentric within 25 µm (0,001 in) TIR.

6.1.3.9 Sleeves shall be relieved along their bore, leaving a locating fit at or near each end.

NOTE Relieving the bore makes assembly and disassembly easier with the required close fits.

6.1.3.10 Drive-collar set screws shall not pass through clearance holes unless the sleeve bore is relieved. For between-bearing pumps, the shaft shall be relieved in this area.

NOTE If set screws are tightened against the shaft, the holes upset the metal on the shaft surface. If this damage is under the sleeve, it cannot be corrected prior to sleeve removal. For between-bearing pumps, the full length of the sleeve will then need to be be pulled over the damaged area. This can cause the sleeve to gall to the shaft or otherwise be damaged. The problem is less severe with overhung pumps where only a small length of the sleeve needs to be pulled over the damaged area.

6.1.3.11 Drive-collar set screws shall be of sufficient hardness to securely embed in the shaft. The pump and seal vendor shall ensure that adequate relative hardness exists between the pump shaft and the drive-collar set screws. See Annex E.

6.1.3.12 Designs using nine or more set screws to drive and/or axially position the sleeve require purchaser approval.

The use of spot drilling on shafts for overhung pumps is not recommended, as this creates a stress riser which can reduce the fatigue life of the shaft.

Spot drilling should be done only after the axial position of the shaft is set. Ensure holes are drilled in line with the set screw holes on the drive collar so that no distortion of the collar or sleeve occurs when the set screws are tightened.

NOTE 1 As shaft size and sealing pressure increase, the axial force on the sleeve (pressure multiplied by area) increases. As the number of set screws increases, the drive collar is weakened and the amount of additional force each set screw will resist decreases.

NOTE 2 Dimples drilled in the pump shaft to accommodate set screws will result in a protruding lip around the drilled hole unless it is chamfered or otherwise eliminated. This lip will damage flexible graphite secondary seals and could damage O-rings.

NOTE 3 It may not be possible to use pre-existing spot drilling for replacement seals.

● **6.1.3.13** If specified, or if recommended by the seal or pump manufacturer and approved by the purchaser, devices other than set screws may be used for axially positioning and driving the sleeve. Examples include a shrink disk (see Figure 19), or a split ring engaging a groove in the shaft (see Figure 20).

NOTE These designs are expensive and are usually used only on unspared pumps. Use of these designs avoids shaft damage by dimpling the shaft for dog-point set screws when high thrust loads exist on the sleeve.

6.1.4 Mating rings

6.1.4.1 Anti-rotation devices shall be designed to minimize distortion of the seal faces. Clamped faces shall not be used unless approved by the purchaser (see Figure 21).

NOTE Flat seal faces are essential for achieving low emissions and good seal performance. Clamped rings are easily distorted.

Documents
Document Sharing Hub

Full document details: DIN EN ISO 21049:2005-11

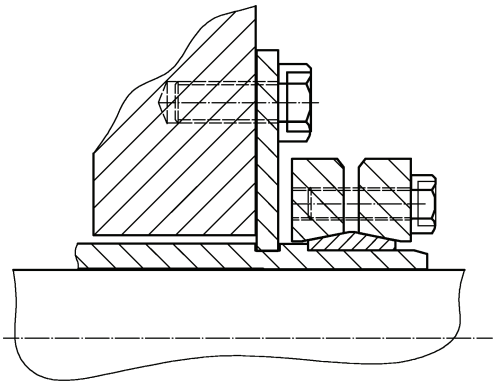

Figure 19 — Seal sleeve attachment by shrink disk

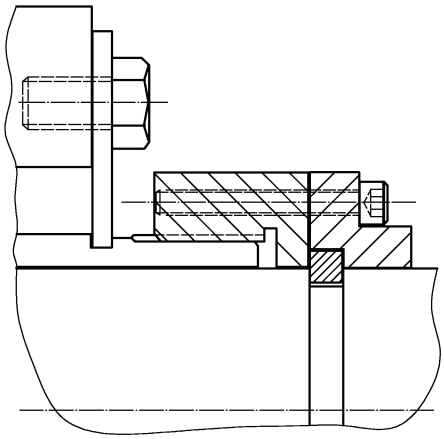

Figure 20 — Seal sleeve attachment by split ring

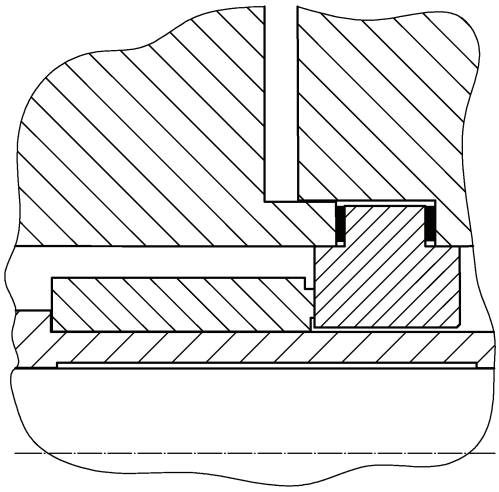

Figure 21 — Clamped faces

Documents
Document Sharing Hub

Full document details: DIN EN ISO 21049:2005-11

6.1.4.2 The arrangement of the mating ring and its mounting into the seal gland plate shall be designed to facilitate cooling of the ring and to avoid thermal distortion.

NOTE Mating rings that are mounted deep in the gland plate and have minimal contact with the process fluid tend to not transfer heat away effectively. The resulting temperature gradients can cause distortion of the faces.

6.1.5 Flexible elements

- **6.1.5.1** If specified, a single-spring Type A seal shall be furnished.

NOTE 1 Multiple coil-spring seals tend to be more axially compact than single coil-spring seals. This gives wider applicability when dual seals are considered. Multiple springs also tend to provide more even loading.

NOTE 2 Single-spring seals generally add 6 mm (0,25 in) to 13 mm (0,5 in) to the axial space requirement of a sealing application. For single seal applications, the single spring has advantages and disadvantages. The single spring allows a lower spring rate to achieve the same face loading. This makes the single spring more tolerant of axial misalignment (errors in axial setting of the seal). This advantage is largely eliminated by use of cartridge seals. For corrosive services, the wire in single springs is significantly greater in cross-section, providing a greater corrosion allowance.

6.1.5.2 Flexible elements shall not rely on static lapped joints for sealing.

This requirement means that designs such as lapped-joint rotating seal rings are prohibited, as they employ an unretained slip fit into a flexible element unit. Designs retaining the seal ring with an interference fit and/or gasket are acceptable.

6.1.6 Materials

6.1.6.1 General

6.1.6.1.1 Unless otherwise specified on the data sheets, shaft seal components shall be furnished with the materials referenced in 6.1.6.2 to 6.1.6.9.

NOTE Proper material selection is critical to the reliable operation of a mechanical seal. Selection depends on the characteristics of the contacting fluid. Variables such as operating temperature, pressure, speed, lubricity, and chemical compatibility are key parameters. The purchaser should solicit seal manufacturer input when in doubt about the compatibility of these materials with the intended service.

6.1.6.1.2 Superior or alternative materials recommended for the service by the seal manufacturer shall be stated in the proposal.

6.1.6.1.3 Materials identified in the proposal other than those specified in this International Standard, or materials for an engineered seal, or exceptions to materials in this International Standard, shall be identified with their applicable specification numbers (e.g. ISO, EN, ASTM, etc.) and the material grade. If no such designation exists, the manufacturer's material specification, giving physical properties, chemical composition, and test requirements, shall be made available upon request.

6.1.6.2 Seal faces

6.1.6.2.1 Each seal shall be comprised of a seal ring and a mating ring.

6.1.6.2.2 Except as required by 6.1.6.2.4, one of the rings shall be premium grade, blister-resistant carbon graphite, with manufacturing treatment to reduce wear, provide chemical resistance and minimize porosity consistent with the intended service.

- **6.1.6.2.3** For Category 2 and Category 3 seals, one of the rings shall be reaction-bonded silicon carbide (RBSiC). If specified, self-sintered silicon carbide (SSSiC) shall be furnished. Several grades of these materials are available; therefore the manufacturer shall state the type of silicon carbide offered for each service.

Documents
Document Sharing Hub

Full document details: DIN EN ISO 21049:2005-11

For Category 1 seals, one of the rings shall be self-sintered silicon carbide (SSSiC). If specified, reaction-bonded silicon carbide (RBSiC) shall be furnished. Several grades of these materials are available; therefore the manufacturer shall state the type of silicon carbide offered for each service.

NOTE See B.3 for guidance related to manufacture and use of RBSiC versus SSSiC.

6.1.6.2.4 Abrasive, viscous and high-pressure services may require two hard materials. For such services, unless otherwise specified, both the seal ring and the mating rings shall be silicon carbide. Other hard face combinations of SSSiC, RBSic and tungsten carbide are widely used, and are acceptable with purchaser approval (see B.4 for further guidance).

The seal manufacturer shall advise if the specified face material combination may present problems during testing of the pump on water. If so, the seal manufacturer shall recommend alternative materials for use during pump performance testing.

The user should be aware of the potential inappropriateness of some seal face material combinations for use during pump shop testing because of the test fluid, water.

NOTE See B.4 for guidance regarding the selection of optimum hard face-material combinations.

6.1.6.2.5 Seal and mating rings shall be of one homogeneous material, except that inherently wear-resistant materials such as silicon carbide or tungsten carbide may be enhanced by applying a coating. Overlays or coatings shall not be used as the sole means of providing wear-resistance.

NOTE Temperature limitations for seal-face materials are listed in B.2.

6.1.6.3 Seal sleeves

Unless otherwise specified, seal sleeves shall be stainless steel [AISI Type 316, 316L or 316Ti, or equivalent (see B.1)].

6.1.6.4 Springs

Unless otherwise specified, seals with multiple coil-springs shall be Alloy C-276 spring material. Single coil-springs shall be AISI Type 316 stainless steel spring material.

NOTE Cross-section thickness of the spring is taken into consideration when selecting spring materials. Heavier cross-section springs, such as those found in single-spring seals, are not as prone to stress corrosion cracking as the thinner cross-section type found in multiple-spring seals. For example, Alloy C-276 is the material most suited to multiple-spring seals, whereas AISI Type 316 stainless steel may be just as suitable in the same service using a single spring.

6.1.6.5 Secondary sealing components

6.1.6.5.1 Unless otherwise specified, O-rings shall be fluoroelastomer (FKM). Temperature limitations for elastomers are listed in B.5.

6.1.6.5.2 Unless otherwise specified, if operating temperatures or chemical compatibility preclude the use of fluoroelastomers (FKM), O-rings shall be perfluoroelastomers (FFKM). See B.6 for additional details.

Users may wish to consider alternatives in cases where the perfluoroelastomer cost is high and/or perfluoroelastomer performance may be questionable. These alternatives include use of alternative secondary element materials and designs such as tetrafluoroethylene (TFE)-coated O-rings, solid TFE sealing elements (usually spring-energized), nitrile rubber (NBR), hydrogenated nitrile rubber (HNBR), ethylene propylene/diene (EPM/EPDM), perfluoroelastomer alternatives/substitutes/approximations, and flexible graphite. The primary factors in selecting an appropriate alternative should be proven experience and lower cost than perfluoroelastomer.

6.1.6.5.3 Unless otherwise specified, if the temperature or chemical limitations of elastomers have been exceeded, secondary seals shall be flexible graphite.

AVA Documents
Document Sharing Hub

Full document details: DIN EN ISO 21049:2005-11

6.1.6.6 Metal bellows

Unless otherwise specified, metal bellows shall be Alloy C-276 for Type B seals and Alloy 718 for Type C seals.

6.1.6.7 Gland plates

6.1.6.7.1 Gland plates for alloy pumps shall be of the same alloy as the casing, or one with superior corrosion resistance and mechanical properties. Unless otherwise specified, gland plates for other pumps shall be stainless steel [AISI Type 316, 316L or 316Ti, or equivalent (see B.1)].

- **6.1.6.7.2** Unless otherwise specified, dynamic and static secondary sealing elements shall be the same material required by 6.1.6.5.1 and 6.1.6.5.2. The gland plate to seal chamber gasket shall be an O-ring for services below 175 °C (350 °F). For temperatures over 175 °C (350 °F) or if specified, graphite-filled type AISI 304 or AISI 316 stainless steel spiral-wound gaskets shall be used.

NOTE Spiral-wound gaskets have bolt torque requirements for full compression. See 6.1.2.7 for bolting requirements for spiral-wound gaskets.

6.1.6.8 Bolt-on seal chambers

6.1.6.8.1 Bolt-on seal chambers for alloy pumps shall be of the same alloy as the casing, or one with superior corrosion resistance and mechanical properties. Unless otherwise specified, seal chambers for other pumps shall be stainless steel [AISI Type 316, 316L or 316Ti, or equivalent (see B.1)].

The user should consider thermal expansion properties of the materials to avoid stress or gasket-related problems if bolt-on chambers are supplied for high temperature services in material dissimilar to that of the pump or attachment stud.

6.1.6.8.2 Chamber-to-casing gasket material requirements shall conform to 6.1.6.7.2.

6.1.6.9 Miscellaneous parts

6.1.6.9.1 Unless otherwise specified, spring-retaining components, drive pins, anti-rotation pins and internal set screws shall have strength and corrosion resistance equal to or better than AISI Type 316 stainless steel (see B.1).

6.1.6.9.2 The pump and seal vendors shall ensure that outside drive components have suitable corrosion resistance for the service (see Annex E for guidance). If used, set screws shall have sufficient hardness and design to carry the load. Alternative methods may be used, such as spot drilling, split rings or shrink disks. See also 6.1.3.12 and 6.1.3.13.

If hardened carbon steel set screws are not suitable for the service, then a hardened stainless steel set screw should be provided (such as 17-4 precipitation-hardened stainless steel).

6.1.6.10 Welding

6.1.6.10.1 Welding of piping, pressure-containing parts, rotating parts and other highly stressed parts, weld repairs and any dissimilar metal welds shall be performed and inspected by operators and procedures qualified in accordance with the appropriate part of EN 287 and EN 288, or ASME IX. Metal bellows used in non-pusher seal construction are exempted from this requirement because they are manufactured using a proprietary welding process which is not covered by general welding codes or industry standards.

6.1.6.10.2 The manufacturer shall be responsible for the review of all repairs and repair welds to ensure that they are properly heat-treated and non-destructively examined for soundness and compliance with the applicable qualified procedures. Repair welds shall be non-destructively tested by the same method used to detect the original flaw. As a minimum, the inspection shall be by liquid penetrant for stainless steel components and magnetic particle for ferrous materials.

AVA Documents
Document Sharing Hub

Full document details: DIN EN ISO 21049:2005-11

6.1.6.10.3 Unless otherwise specified, non-pressure-retaining structural welding, such as welding on baseplates, non-pressure ducting, lagging and control panels, shall be performed in accordance with AWS D1.1.

6.1.6.10.4 Pressure casings made of wrought materials or combinations of wrought and cast materials shall conform to the conditions specified in a) to d) below. This includes bolt-on seal chambers if constructed by welding.

f) Plate edges shall be inspected by magnetic particle or liquid penetrant examination as required by ASME VIII, Division 1, UG-93(d)(3).

g) Accessible surfaces of welds shall be inspected by magnetic particle or liquid penetrant examination after back-chipping or gouging and again after post-weld heat treatment.

h) Pressure-containing welds, including welds of the case to horizontal and vertical joint flanges, shall be full-penetration welds.

i) Fabricated pressure-retaining parts (regardless of thickness) shall be post-weld heat-treated.

6.1.6.10.5 Connections welded to the pressure-retaining parts shall be installed as follows.

- a) In addition to 6.1.6.10.1, if specified, 100 % radiography, magnetic particle examination, ultrasonic examination, or liquid penetrant examination of welds shall be performed.

b) Auxiliary piping welded to alloy steel pressure-retaining parts shall be of a material with the same nominal properties as the casing material or shall be of low carbon austenitic stainless steel. Other materials compatible with the casing material and intended service may be used with the purchaser's approval.

c) If heat treatment is required, piping welds shall be made before the component is heat-treated.

- d) If specified, proposed connection designs shall be submitted to the purchaser for approval before fabrication. The drawings shall show weld designs, size, materials, and pre- and post-weld heat treatments.

e) All welds shall be heat-treated in accordance with the methods described in EN 13445 or ASME VIII, Division 1, UW-40.

6.1.6.11 Low temperature service

- **6.1.6.11.1** For operating temperatures below – 29 °C (– 20 °F) or, if specified, for other low ambient temperatures, steels shall have properties as described in 6.1.6.11.2 to 6.1.6.11.6.

NOTE Also see B.5, which covers temperature limits for elastomers.

6.1.6.11.2 To avoid brittle failures, materials of construction for low-temperature service shall be suitable for the minimum design metal temperature in accordance with the codes and other requirements specified. The purchaser and the vendor shall agree on any special precautions necessary with regard to conditions that may occur during operation, maintenance, transportation, erection, commissioning and testing.

Good design practice should be followed in the selection of fabrication methods, welding procedures, and materials for vendor-furnished steel pressure-retaining parts that may be subject to temperatures below the ductile-brittle transition temperature. The published design-allowable stresses for metallic materials in standards such as the ASME Boiler and Pressure Vessel code are based on minimum tensile properties. Some standards do not differentiate between rimmed, semi-killed, fully-killed hot-rolled and normalized material, nor do they take into account whether materials were produced under fine- or course-grain practices. The vendor should exercise caution in the selection of materials intended for services between – 30 °C (– 20 °F) and 40 °C (100 °F).

6.1.6.11.3 All pressure-retaining steels applied at a specified minimum design metal temperature below – 29 °C (– 20 °F) require a Charpy V-notch impact test of the base metal and the weld joint unless they are exempt in accordance with ASME VIII, Division 1, UHA-51. Impact test results shall meet the requirements of ASME VIII, Division 1, UG-84.

AVA Documents
Document Sharing Hub

Full document details: DIN EN ISO 21049:2005-11

6.1.6.11.4 Carbon and low alloy steel pressure-retaining parts applied at a specified minimum design metal temperature between – 30 °C (– 20 °F) and 40 °C (100 °F) shall require impact testing, as follows.

a) Impact testing is not required for parts with a governing thickness (see 6.1.6.11.5) of 25 mm (1 in) or less.

b) Impact testing exemptions for parts with a governing thickness (see 6.1.6.11.5) greater than 25 mm (1 in) shall be established in accordance with ASME VIII, Division 1, UCS-66. The minimum design metal temperature without impact testing may be reduced as shown in ASME VIII, Division 1, Figure UCS-66.1. If the material is not exempt, Charpy V-notch impact test results shall meet the minimum impact energy requirements of ASME VIII, Division 1, UG-84.

6.1.6.11.5 The governing thickness used to determine impact-testing requirements shall be the greater of the following:

a) the nominal thickness of the largest butt welded joint;

b) the largest nominal section for pressure containment, excluding:

— structural support sections such as feet or lugs; and

— structural sections required for attachment or inclusion of mechanical features such as jackets or seal chambers; or

c) one fourth of the nominal flange thickness, including gland plate and seal chamber flanges.

● **6.1.6.11.6** The purchaser shall specify the minimum design metal temperature to be used to establish impact test requirements.

NOTE Normally, this will be the minimum surrounding ambient temperature or minimum liquid pumping temperature, whichever is lower. However, the purchaser may specify a minimum design metal temperature based on pumpage properties, such as autorefrigeration at reduced pressures.

6.2 Design requirements (category-specific)

6.2.1 Category 1 seals

6.2.1.1 General information (Category 1)

This subclause provides design details for Category 1 seals, as described in Clause 4. Specific information provided here is in addition to the common seal design features listed in 6.1.

6.2.1.2 Seal chamber and gland plate (Category 1)

● **6.2.1.2.1** If specified, or if required by 6.1.2.14, a distributed seal flush system such as a circumferential or multi-port arrangement shall be provided for Arrangement 1 and Arrangement 2 seals with rotating flexible elements. The seal flush arrangement shall be located to maximize the uniformity and degree of cooling of the seal faces. For multi-port systems, ports having a minimum diameter of 3 mm (1/8 in) shall be used. The seal flush passages shall be designed so that they can be cleaned (see Figure 22).

NOTE Distributed flush systems are not specified for stationary flexible-element single or dual seals because this becomes complex and expensive. Furthermore, stationary flexible-element single seal faces are in a position in the seal chamber where effective mixing takes place, and the need for distribution of the flush is diminished.

AVA Documents
Document Sharing Hub

Full document details: DIN EN ISO 21049:2005-11

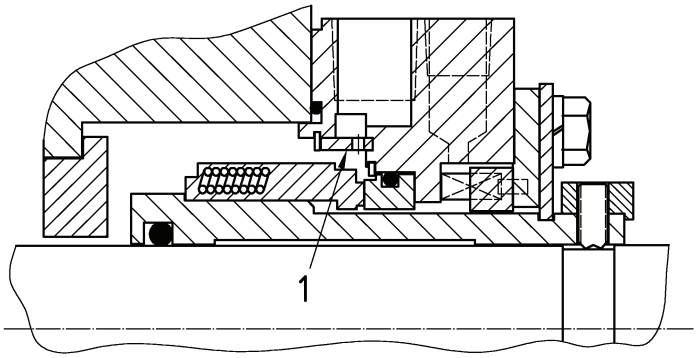

Key

1 distributed flush

Figure 22 — Distributed seal flush system

6.2.1.2.2 All mating joints between the seal gland plate, the seal chamber, the containment seal chamber and the pump case shall incorporate a confined gasket to prevent blowout. Controlled compression of the gasket (for example, an O-ring or a spiral-wound gasket) shall be accomplished with metal-to-metal contact between the gland plate and the seal chamber face. The design of the joint shall prevent extrusion of the gasket to the interior of the seal chamber where it might interfere with seal cooling. Where space or design limitations make this requirement impractical, an alternative seal gland plate design shall be submitted to the purchaser for approval (see Figure 23).

NOTE To minimize runout, metal-to-metal contact is needed to keep seal faces and the shaft perpendicular.

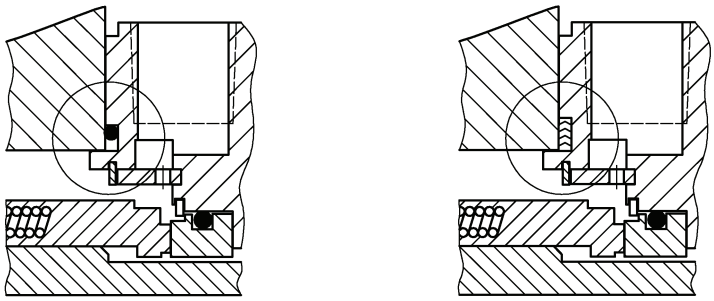

a) O-ring **b) Spiral-wound gasket**

Figure 23 — Mating joint gasket

6.2.2 Category 2 seals

6.2.2.1 General information (Category 2)

This subclause provides design details for Category 2 seals, as described in Clause 4. Specific information provided here is in addition to the common seal design features listed in 6.1.

6.2.2.2 Seal chamber and gland plate (Category 2)

● **6.2.2.2.1** If specified, or if required by 6.1.2.14, a distributed seal flush system such as a circumferential or multi-port arrangement shall be provided for Arrangement 1 and Arrangement 2 seals with rotating flexible elements. The seal flush arrangement shall be located to maximize the uniformity and degree of cooling of the seal faces. For multi-port systems, ports having a minimum diameter of 3 mm (1/8 in) shall be used. The seal flush passages shall be designed so that they can be cleaned (see Figure 22).

Documents
Document Sharing Hub

Full document details: DIN EN ISO 21049:2005-11

NOTE Distributed flush systems are not specified for stationary flexible-element single or dual seals because this becomes complex and expensive. Furthermore, stationary flexible-element single seal faces are in a position in the seal chamber where effective mixing takes place, and the need for distribution of the flush is diminished.

6.2.2.2.2 All mating joints between the seal gland plate, the seal chamber, the containment seal chamber and the pump case shall incorporate a confined gasket to prevent blowout. Controlled compression of the gasket (for example, an O-ring or a spiral-wound gasket) shall be accomplished with metal-to-metal joint contact both inside and outside the stud circle to prevent buckling of the gland plate. The design of the joint shall prevent extrusion of the gasket to the interior of the seal chamber where it might interfere with seal cooling. Where space or design limitations make this requirement impractical, an alternative seal gland plate design shall be submitted to the purchaser for approval (see Figure 23).

NOTE To minimize runout, metal-to-metal contact is required to keep seal faces and the shaft perpendicular.

6.2.2.3 Cartridge seal sleeves (Category 2)

6.2.2.3.1 Standard seal sizes shall fit shafts in even 10 mm increments.

6.2.2.3.2 If key drives are supplied, keys shall be positively secured to the shaft (see Figure 24).

NOTE Keys located on the shaft deep in traditional stuffing boxes cannot be easily reached for seal assembly.

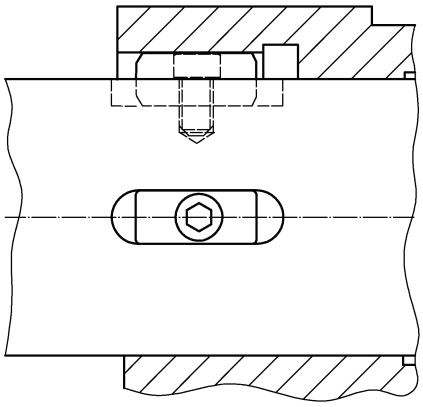

Figure 24 — Attachment of key drives to shaft

6.2.3 Category 3 seals

6.2.3.1 General information (Category 3)

This subclause provides design details for Category 3 seals, as described in Clause 4. Specific information provided here is in addition to the common seal design features listed in 6.1. Category 2 information from 6.2.2 applies to Category 3 seals, except as amended in this subclause.

6.2.3.2 Seal chamber and gland plate (Category 3)

A distributed seal flush system such as a circumferential or multi-port arrangement shall be provided for all Category 3 Arrangement 1 and Arrangement 2 seals with rotating flexible elements. The seal flush arrangement shall be located to maximize the uniformity and degree of cooling of the seal faces. For multi-port systems, a minimum of 3 mm (1/8 in) diameter ports shall be used. The seal flush passages shall be cleanable (see Figure 22).

NOTE In many cases, effective seal operation is dependent on distributed flush systems which maximize heat removal from the seal faces to ensure effective film formation and prevent asymmetrical thermal distortions in sealing components. Distributed flush systems are not specified for stationary flexible-element single or dual seals because this becomes complex and expensive. Furthermore, stationary flexible-element single seal faces are in a position in the seal chamber where effective mixing takes place, and the need for distribution of the flush is diminished.

Documents
Document Sharing Hub

Full document details: DIN EN ISO 21049:2005-11

7 Specific seal configurations

7.1 Arrangement 1 seals

7.1.1 Seal sleeves

Seal sleeves shall be in one piece.

7.1.2 Seal chamber and gland plate

7.1.2.1 Unless otherwise specified:

a) a fixed carbon throttle bushing shall be installed in the gland plate for Category 1 seals;

b) a fixed non-sparking metal bushing shall be installed in the gland plate for Category 2 seals; and

c) a close-clearance (floating) carbon throttle bushing shall be installed in the gland plate for Category 3 seals.

Throttle bushings shall be positively retained against pressure blowout to minimize leakage if the seal fails. Alternative leakage control devices may be provided as specified.

Bushings may be sized to allow for thermal growth of the shaft.

NOTE Carbon bushing material is suitable for chemical plant and refining services, but is more sensitive to impact damage than a non-sparking metal bushing. Category 2 seals are designed to fit into ISO 13709 seal chambers and will be used in most refinery services. PTFE (and PTFE-graphite composites) is a less desirable bushing material, due to its thermal expansion properties and lack of memory.

● **7.1.2.2** If specified, a close-clearance (floating) carbon throttle bushing shall be furnished for Category 1 or Category 2 seals.

7.1.2.3 Unless otherwise specified, flush, vent, and drain connections shall be provided and plugged. Plugs for threaded connections shall comply with 6.1.2.18.

7.2 Arrangement 2 seals

7.2.1 General

7.2.1.1 Unless otherwise specified, the inner seal shall be a contacting wet seal (2CW-CW or 2CW-CS). The inner seal shall have an internal (reverse) balance feature designed and constructed to withstand reverse pressure differentials up to 0,275 MPa (2,75 bar) (40 psi) without opening or dislodging components.

NOTE The containment seal chamber pressure is normally less than the inner seal chamber pressure. The containment seal chamber is usually connected through an orifice to a vapour recovery system, in which case it will operate at the pressure of the system to which it is connected. It is unusual for a vapour recovery system to reach a gauge pressure of 0,275 MPa (2,75 bar) (40 psi) even under upset conditions.

● **7.2.1.2** If specified, a non-contacting inner seal (2NC-CS) shall be provided.

NOTE Non-contacting inner seal designs utilize a lift-off face pattern, such as grooves or waves, which can provide reliable operation in liquid or gas service. Often it is difficult to provide adequate vapour suppression margin when sealing clean high vapour-pressure or mixed vapour-pressure fluids with contacting wet-face designs. A non-contacting inner seal can give the option of sealing a liquid/gas mixture by allowing the product to flash into a gas across the seal faces, effectively using the non-contacting design inner seal as a gas seal. The leakage rate from a non-contacting design is normally higher than a contacting wet design.

7.2.1.3 Unless otherwise specified, a contacting containment seal shall be used with liquid buffer systems and a non-contacting containment seal shall be used if a liquid buffer system is not provided.

AVA Documents
Document Sharing Hub

Full document details: DIN EN ISO 21049:2005-11

If recommended by the seal manufacturer and agreed by the purchaser, a contacting containment seal face design may be provided for services with a gas buffer system.

Inner and outer seal faces are a contacting design if a liquid buffer system is provided. For gas buffer systems, contacting or non-contacting containment seal face designs may be used.

NOTE Non-contacting containment seals utilize a face pattern (grooves, waves, etc.) to provide lift-off of the seal faces. Relative to contacting ‘’dry-running’’ containment seals, non-contacting face designs:

a) have a lower wear rate in operation;

b) are more tolerant to a “bone-dry” buffer gas environment; and

c) are designed for higher surface speeds and pressure differentials.

Contacting containment seal designs normally provide the lowest leakage of vapours and liquids. Manufacturer’s standard dry contacting seal designs are pressure-limited for continuous service, usually below a gauge pressure of 0,07 MPa (0,7 bar) (10 psi). However, designs are suitable in a gas environment of product vapours for continuous operation with excursions in gauge pressure to 0,275 MPa (2,75 bar) (40 psi) to allow for variation in the vapour recovery system pressure. Friction and rubbing wear is dependent on the shaft speed, containment seal chamber pressure, and properties of the vapour being sealed. Use of “bone-dry” nitrogen as a buffer gas can result in rapid carbon face wear.

● **7.2.1.4** The buffer fluid shall be specified on the data sheet.

NOTE Many existing 2CW-CS installations do not use an external buffer gas. If a buffer gas is not used, the containment seal chamber is filled with vaporized process fluid.

7.2.2 Seal sleeves

7.2.2.1 Where possible, seal sleeves shall be designed as one piece. Cartridge designs that incorporate an auxiliary sleeve at the inboard end of the seal sleeve to facilitate the assembly of the inner seal components are acceptable. The auxiliary sleeve shall be axially located on the seal sleeve by a shoulder and driven by dog point set screws (see Figure 25).

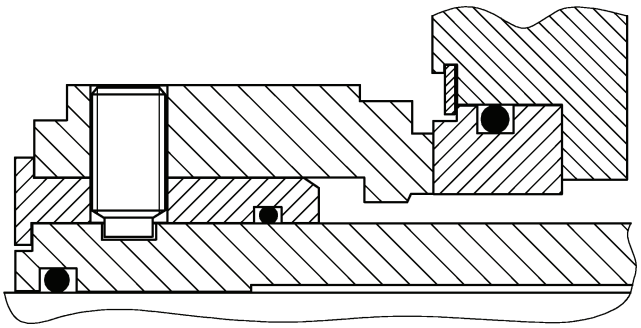

Figure 25 — Auxiliary sleeve arrangement

7.2.2.2 If recommended by the vendor and agreed by the purchaser, alternative auxiliary sleeve designs may be provided. To ensure reliable seal performance, the fit of the auxiliary sleeve and the seal sleeve should meet the requirements of Clause 6.

NOTE Having an auxiliary sleeve at the inboard end of a dual seal cartridge permits the inner seal to be installed from the inboard end. It reduces the time and complexity involved in cartridge assembly. It also makes it possible for the inner and outer pusher seal to be the same size.

7.2.3 Seal chamber and gland plates

● If specified as a result of the process conditions and if additional length for the seal arrangement is available, a fixed carbon throttle bushing shall be installed in the gland plate and positively retained against pressure blowout.

AVA Documents
Document Sharing Hub

Full document details: DIN EN ISO 21049:2005-11