THE ENGINEERING EQUIPMENT AND MATERIALS USERS' ASSOCIATION

GUIDE FOR THE DESIGN, CONSTRUCTON AND USE OF MOUNDED HORIZONTAL CYLINDRICAL STEEL VESSELS FOR PRESSURISED STORAGE OF LPG AT AMBIENT TEMPERATURES

PUBLICATON No. 190 : 2000

(Reprinted 2005 incorporating Errata dated Oct 2003, Amendments No 1 dated Nov 2004, and further amendments)

Documents
Document Sharing Hub

Copyright Engineering Equipment and Materials Users Association
Provided by IHS Markit under license with EEMUA
No reproduction or networking permitted without license from IHS
Full document details: EEMUA 190-2005

Licensee=/, User=,
Not for Resale,

THE ENGINEERING EQUIPMENT AND MATERIALS USERS' ASSOCIATION

GUIDE FOR THE DESIGN, CONSTRUCTON AND USE OF MOUNDED HORIZONTAL CYLINDRICAL STEEL VESSELS FOR PRESSURISED STORAGE OF LPG AT AMBIENT TEMPERATURES

PUBLICATON No. 190 : 2000

(Reprinted 2005 incorporating Errata dated Oct. 2003, Amendments No 1 dated Nov 2004, and further amendments)

Copyright © 2000 The Engineering Equipment and Materials Users' Association

ISBN 085931 071 X

3rd Floor, 20 Long Lane
London EC1A 9HL
Telephone : +44 (0) 20 7796 1293
Fax : +44 (0) 20 7796 1294
Email : sales@eemua.org
Website : www.eemua.org

Copyright Engineering Equipment and Materials Users Association
Provided by IHS Markit under license with EEMUA
No reproduction or networking permitted without license from IHS
Full document details: EEMUA 190-2005

Licensee=/, User=,
Not for Resale,

THE ENGINEERING EQUIPMENT AND MATERIALS USERS' ASSOCIATION

The Engineering Equipment and Materials Users' Association (EEMUA) was formed in 1983 by the Amalgamation of the Oil Companies Materials Association (OCMA) and the Engineering Equipment Users Association (EEUA). It is an organisation of substantial purchasers and users of engineering products, whose members include leading national and multinational companies in the petroleum, gas, chemical and energy industries, and engineering contractors that act on behalf of those companies as their main agents. EEMUA is concerned with the design, installation, operation and maintenance of the engineering plant used by members in pursuing their business activities.

The Association aims to reduce members' costs by providing the opportunity for them to share resources and expertise in order to keep abreast of technological developments and improve the effectiveness and efficiency of their engineering activities. EEMUA supports the British Standards Institution, works with other institutions, associations, government departments, regulatory authorities and the Confederation of British Industry, and is also actively involved with other standards-making bodies, both national and international, such as the American Petroleum Institute.

EEMUA work is carried out in-house by members or with the help of other organisations, and may lead to the production of Association publications. These are prepared primarily for members' use, but are usually offered for sale and thus for more general use. Such publications may also be submitted, normally through the British Standards Institution, as bases for appropriate national, European or international standards.

Members of EEMUA include:

ABB Engineering Services, Associated Octel, AstraZeneca, BASF, BP, ChevronTexaco, ConocoPhillips, Dow Corning, E.ON UK, ExxonMobil, Foster Wheeler Energy, Huntsman, Hydro, Johnson Matthey, Royal Vopak, RWE Npower, Shell, Syngenta and Total

Documents
Document Sharing Hub

Copyright Engineering Equipment and Materials Users Association
Provided by IHS Markit under license with EEMUA
No reproduction or networking permitted without license from IHS
Full document details: EEMUA 190-2005

Licensee=/, User=,
Not for Resale,

ABOUT THIS PUBLICATION: LEGAL ASPECTS

In order to ensure that nothing in this publication can in any manner offend against or be affected by the provisions of the Restrictive Trade Practices Act 1976, the recommendations which it contains will not take effect until the day following that on which its particulars are furnished to the Office of Fair Trading.

As the subject dealt with seems likely to be of wide interest, this publication is also being made available for sale to non-members of the Association. Any person who encounters an inaccuracy or ambiguity when making use of this publication is asked to notify EEMUA without delay so that the matter can be investigated and appropriate action taken.

It has been assumed in the preparation of this publication that the user will ensure selection of those parts of its contents appropriate to the intended application, and that such selection and application are correctly carried out by appropriately qualified and competent persons for whose guidance the publication has been prepared. EEMUA does not, and indeed cannot, make any representation or give any warranty or guarantee in connection with material contained in its publications, and expressly disclaims any liability or responsibility for damage or loss resulting from their use. Any recommendations contained herein are based on the most authoritative information available at the time of writing and on good engineering practice, but it is essential for the user to take account of pertinent subsequent developments and/or legislation.

All rights are reserved. No part of this publication may be reproduced, stored in a retrieval system, or transmitted in any form or by any means: electronic, mechanical, photocopying, recording or other.

Infringement of copyright is not only illegal, but also reduces the Association's income thereby jeopardising its ability to fund the production of future publications.

Amendments

All amendments to this and other EEMUA publications will be placed on our website: www.eemua.co.uk/publications/amendments.htm.

Documents
Document Sharing Hub

Copyright Engineering Equipment and Materials Users Association
Provided by IHS Markit under license with EEMUA
No reproduction or networking permitted without license from IHS
Full document details: EEMUA 190-2005

Licensee=/, User=,
Not for Resale,

CONTENTS

Page

FOREWORD 1

1 INTRODUCTION AND SCOPE 2
1.1 INTRODUCTION 2
1.2 SCOPE 2
1.3 DEFINITIONS 2
1.4 GENERAL RESPONSIBILITIES OF THE PURCHASER 3
1.5 PROJECT PLANNING 3

2 TYPES OF STORAGE VESSEL 4
2.1 SELECTION OF STORAGE VESSEL TYPE 4
2.2 MOUNDED STORAGE 4

3 FOUNDATION AND EARTH MOUND 6
3.1 INFORMATION REQUIRED BY THE CONTRACTOR 6
3.2 SOIL INVESTIGATION 6
3.2.1 Fieldwork 6
3.2.2 Laboratory Work 7
3.2.2.1 Classification Tests 8
3.2.2.2 Other Tests 8
3.2.3 Reporting 8
3.3 TYPES OF FOUNDATION 9
3.3.1 Soil Bearing FoundationS 9
3.3.2 Sandbed on Piled Concrete Slab 10
3.3.3 Vessels on Saddles 10
3.4 SETTLEMENT OF SOIL BEARING FOUNDATIONS 10
3.4.1 Immediate Settlements 10
3.4.2 Long-term Settlements 10
3.4.3 Total and Differential Settlements 11
3.5 SETTLEMENT MONITORING 11
3.5.1 Settlement Monitoring During Preloading 11
3.5.2 Settlement Monitoring During Operation 11
3.6 FOUNDATION DESIGN 12
3.6.1 General 12
3.6.2 Operational Phase of Vessel 12
3.6.3 Construction Phase of Vessel 12
3.7 MOUND DESIGN 13
3.7.1 Geometry 13
3.7.2 External Loads 13
3.7.3 Erosion Protection 13
3.8 FOUNDATION AND MOUND MATERIAL 14
3.9 CONSTRUCTION OF FOUNDATION AND MOUND 14
3.9.1 Foundation 14
3.9.2 Mound 15

4 VESSEL 16
4.1 DESIGN 16
4.1.1 General 16
4.1.2 Design Conditions 18
4.1.3 Design Loads 18
4.1.3.1 Dead Weight of the Vessel 18
4.1.3.2 Weight of Liquid in the Vessel 18
4.1.3.3 Internal Design Pressure 18

Documents
Document Sharing Hub

Copyright Engineering Equipment and Materials Users Association
Provided by IHS Markit under license with EEMUA
No reproduction or networking permitted without license from IHS
Full document details: EEMUA 190-2005

Licensee=/, User=,
Not for Resale,

4.1.3.4 Negative Internal Pressure 20
4.1.3.5 Loads due to the Mound 20
4.1.3.6 Loads due to Uneven Support by the Foundation 20
4.1.3.7 Loads due to Temperature and Internal Pressure Variations 21
4.1.3.8 Loads due to Earthquake 21
4.1.3.9 Loads due to an External Explosion 21
4.1.4 Load Combinations 22
4.2 MATERIALS 22
4.3 CONSTRUCTION 23
4.3.1 Tolerances 23
4.3.2 Stiffeners 23
4.3.3 Welding 23
4.3.4 Heat Treatment 23
4.3.4.1 Pre-heat Treatment 23
4.3.4.2 Post-Weld Heat Treatment 24
4.4 FITTINGS FOR OPERATIONAL PURPOSES 24
4.4.1 General 24
4.4.2 Fittings for Product Inlet and Outlet 24
4.4.3 Piping 25
4.4.4 Drainage Facilities 25
4.4.5 Manholes 25
4.4.6 Sleeves Around Nozzles and Manholes 26
4.4.7 Instrumentation 26
4.4.7.1 General 26
4.4.7.2 Level Measuring Instruments 26
4.4.7.3 Level Alarms and Ullage Gauges 26
4.4.7.4 Pressure Indicators and Alarms 26
4.4.7.5 Vacuum Relief Valves 27
4.4.7.6 Temperature Measuring Devices and Indicators 27
4.4.7.7 Gas Detectors and Explosimeters 27
4.5 CORROSION PROTECTION 27
4.5.1 General 27
4.5.2 Coating 28
4.5.2.1 External Coating 28
4.5.2.2 Glass Fibre Reinforced Bitumen Coating System 28
4.5.2.3 Epoxy or Urethane Coating System 28
4.5.2.4 Coating Application 29
4.5.2.5 Coating Prequalification 29
4.5.2.6 Internal Coating 30
4.5.3 Cathodic Protection 30
4.5.3.1 General 30
4.5.3.2 Protection Criteria 30
4.5.3.3 Design 31
4.5.3.3.1 Data to be Provided by Purchaser 31
4.5.3.3.2 Soil Resistivity Measurements 31
4.5.3.3.3 Electrical Separation 31
4.5.3.3.4 Choice of Cathodic Protection System 32
4.5.3.3.5 Transformer-Rectifiers 32
4.5.3.3.6 Automatic Potential Control 32
4.5.3.3.7 Groundbeds 33
4.5.3.3.8 Monitoring Facilities 33
4.5.3.3.9 Cables and Distribution Boxes 34
4.5.3.3.10 Design Documents 34
4.5.3.4 Installation 35
4.5.3.5 Commissioning 35
4.5.3.6 Operation and Maintenance 36

Documents
Document Sharing Hub
Copyright Engineering Equipment and Materials Users Association
Provided by IHS Markit under license with EEMUA
No reproduction or networking permitted without license from IHS
Licensee=/, User=,
Not for Resale,
Full document details: EEMUA 190-2005

4.5.3.7 Special Design Considerations 36
4.6 LIGHTING PROTECTION 37

5 VESSEL: INSPECTION, TESTING AND CERTIFICATION 38
5.1 INSPECTION REQUIREMENTS, PROCEDURES AND STANDARDS 38
5.1.1 Procedures and Standards 38
5.1.2 Inspection Prior to Vessel Assembly 38
5.1.3 Inspection During Vessel Assembly 38
5.1.4 Inspection After Vessel Assembly 38
5.2 HYDROSTATIC PRESSURE TEST 38
5.3 MANUFACTURING REPORT 39
5.4 MARKING AND CERTIFICATION 39

6 GUIDELINES FOR IN-SERVICE INSPECTION 40
6.1 INSPECTION DURING OPERATION 40
6.1.1 Vessel 40
6.1.2 Vessel Settlement 40
6.1.3 Mound 40
6.2 TECHNICAL REVIEW 40
6.3 RECOMMENDED MINIMUM REQUIREMENTS FOR THE TECHNICAL INTEGRITY REVIEW 41
6.3.1 Recommended Actions Prior to Inspection 41
6.3.2 Recommended Actions Post-inspection 41
6.4 TYPICAL FAILURE MODES 42
6.5 RECOMMENDATIONS FOR PLANING OF INSPECTION 42

7 REFERENCES 44
7.1 AMERICAN STANDARDS 44
7.2 BRITISH STANDARDS (including transposed ENs) 44
7.3 INTERNATIONAL STANDARDS 45
7.4 MISCELLANEOUS CODES AND STANDARDS 45
7.5 RECOMMENDED FURTHER READING 46

8 GLOSSARY OF ABBREVIATIONS 47

APPENDIX A: STRESS ANALYSIS OF MOUNDED STORAGE VESSELS 49
A.1 INTRODUCTION 49
A.2 CIRCUMFERENTIAL BENDING 49
A.2.1 Unstiffened Cylinders 49
A.2.2 Stiffened Cylinders 49
A.3 NORMAL FORCES AND SHEAR FORCES 50
A.4 CALCULATION METHOD FOR STIFFENED CYLINDERS 50
A.4.1 Nomenclature 50
A.4.2 Loads 51
A.4.2.1 Dead Weight (Load 1) 51
A.4.2.2 Weight of Liquid Fill (Load 2) 52
A.4.2.3 Internal Design Pressure (Load 3) 52
A.4.2.4 Negative Internal Pressure (Load 4) 52
A.4.2.5 Pressure Due to Mound (Load 5) 53
A.4.2.6 Load due to Uneven Support of the Vessel (Load 6) 54
A.4.2.7 Axial Loads due to Changes in Vessel Length (Load 7) 55
A.4.2.8 Seismic Loads (Load 8) 55
A.4.2.9 External Pressure Caused by Explosion of Gas Clouds (Load 9) 56
A.4.2.10 Supporting Pressure by the Foundation (Load 10) 56
A.4.3 Selection of Shell Plate Thickness 57
A.4.4 Bending Moments, Normal Forces and Shear Forces in Stiffening Rings 57
A.4.4.1 General 57
A.4.4.2 Bending Monents for 120° Support Angle 58

--`,,```,,,,``-`-`,,`,,`,`,,`---
Documents
Document Sharing Hub
Copyright Engineering Equipment and Materials Users Association
Provided by IHS Markit under license with EEMUA
No reproduction or networking permitted without license from IHS
Licensee=/, User=,
Not for Resale,
Full document details: EEMUA 190-2005

A.4.4.3 Normal Forces for 120° Support Angle 58
A.4.4.4 Shear Forces for 120° Support Angle 59
A.4.5 Bending Moments and Forces for 90° Support angle....60
A.4.6 Bending Moments and Forces for 60° Support angle....60
A.4.7 Dimensions of Stiffening Rings....60
A.4.8 Secondary Bending Stresses 61
A.4.9 Summary of Stresses 61
A.4.9.1 Stresses in the Shell Plates....61
A.4.9.1.1 Circumferential Stresses in the Shell Plates....61
A.4.9.1.2 Longitudinal Stresses in the Shell Plates 62
A.4.9.1.3 Shear Stresses in the Shell Plates 62
A.4.9.1.4 Stress Intensities in the Shell Plates....63
A.4.9.2 Stresses in the Domed Ends 63
A.4.9.3 Stresses in the Stiffening Rings 63
A.4.9.4 Stresses in the Welds between Stiffening Rings and Shell Plates 64
A.4.9.5 Stability of Stiffening Rings....65
A.4.10 Stability of Stiffening Rings, Eurocode 3 66
A.4.10.1 General....66
A.4.10.2 Local Instability 67
A.4.10.3 In-plane Buckling 67
A.4.10.4 Shear Buckling of the Web....67
A.4.10.5 Flange Induced Buckling....68
A.4.10.6 Interaction between Buckling Modes 70
A.5 STRESS AND STABILITY CRITERIA 71
A.5.1 General....71
A.5.2 Shell Plates....72
A.5.3 Domed Ends....72
A.5.4 Stiffening Rings 73
A.6 DEFORMATION OF STIFFENING RINGS....73

APPENDIX B: TYPICAL DESIGN FEATURES FOR VESSEL, FOUNDATION AND CONNECTIONS 75
B.1 FOUNDATION MODES 75
B.2 MOUND....77
B.3 VESSEL CONNECTIONS (CONCEPTUAL)....79
B.4 BOTTOM OUTLET WITH INSPECTION TUNNEL (CONCEPTUAL) 80

APPENDIX C: DISTRIBUTION OF SOIL REACTION (SUPPORTING LOAD) 81

APPENDIX D: RECOMMENDED STEEL GRADES 82

APPENDIX E: PROJECT PLANNING....83

[APPENDIX F DELETED]

APPENDIX G: NON-DESTRUCTIVE TESTING REQUIREMENTS 85

APPENDIX H: MATERIAL HARDNESS TESTING 87

APPENDIX I: SELECTION OF STORAGE SYSTEM....89

SUMMARY LIST OF CURRENT EEMUA PUBLICATIONS....(End)

Documents
Document Sharing Hub

Copyright Engineering Equipment and Materials Users Association
Provided by IHS Markit under license with EEMUA
No reproduction or networking permitted without license from IHS
Full document details: EEMUA 190-2005

Licensee=/, User=,
Not for Resale,

Documents
Document Sharing Hub

Copyright Engineering Equipment and Materials Users Association
Provided by IHS Markit under license with EEMUA
No reproduction or networking permitted without license from IHS
Full document details: EEMUA 190-2005

Licensee=/, User=,
Not for Resale,

FOREWORD

GENERAL

Although pressure vessel designers have several codes from which to choose, no standard or guidance document specifically encompassing the design and installation of mounded storage vessels has been generally available. EEMUA's Storage Tanks Technical Committee has for some time been aware of this need, and has accordingly developed the present document.

The integrity of a pressure vessel depends on both its strength and the adequacy of the supporting foundation or structure. For vessels on earth foundations, with their inherent proneness to settlement, this aspect is of greater importance than for those more conventionally supported. For this reason, considerable coverage is given in this guide to soil investigation and foundation design.

IMPACT OF THE EUROPEAN PRESSURE EQUIPMENT DIRECTIVE

The European Pressure Equipment Directive (PED) became mandatory on 30th May 2002 following a 2½-year transitional period in which compliance was optional. Pressure equipment placed on the market and/or put into service in the European Economic Area (EEA) must now comply with the requirements of that Directive, which has been transposed by individual Member States into statutory regulations. Switzerland has also adopted the Directive.

REFERENCES AND ABBREVIATIONS

A listing of documents referred to in the main text and appendices, and recommended literature for further reading are given in Section 7, and a glossary of abbreviations in Section 8.

NOTE ON THE PRESENT (2005) REPRINT

This reprint incorporates Errata dated Oct. 2003, Amendments No 1 dated Nov 2004, and further amendments, largely of an editorial nature. Principal changes, including some renumbering of subsections and inclusion of additional headings, are indicated either by sidelines or by grey highlighting. The changes previously advised in the Errata and Amendments No 1 are not so indicated. Section 6, Guidelines for In-Service Inspection, has been extensively restructured, now incorporating what were previously the latter subsections of Section 5; also, Appendix F, Manufacturing Report, has been deleted as being too rigid in its advice on the layout of a manufacturing report. The appendices have not, however, been renumbered.

Documents
Document Sharing Hub

Copyright Engineering Equipment and Materials Users Association
Provided by IHS Markit under license with EEMUA
No reproduction or networking permitted without license from IHS
Full document details: EEMUA 190-2005

Licensee=/, User=,
Not for Resale,

1 INTRODUCTION AND SCOPE

1.1 INTRODUCTION

In the context of the present document, **mounded storage** is the term given to the pressurised storage at ambient temperatures of liquefied petroleum gases in horizontal cylindrical vessels placed at or just below ground level and completely covered with suitable backfill. Several vessels may be placed side by side under one 'mound'.

Mounded storage installations, which have many advantages over alternative designs (see 2.2), may be located in refineries, chemical plants, gas plants, exploration and production facilities and supply/marketing depots. This Guide is applicable to all such locations.

1.2 SCOPE

Guidance is provided covering the main requirements for the successful design, construction, installation and use of mounded storage steel vessels, including:

- criteria for selecting mounded storage
- soil survey
- foundation and mound design
- vessel design and fabrication
- erection and construction
- requirements for operability (fittings, instrumentation)
- corrosion protection
- inspection and testing
- in-service monitoring, inspection and maintenance.

More detailed guidance on specific aspects, for example on stress analysis, is given in the appendices.

This Guide uses the formulae and design philosophy set out in the (BSI) PD 5500 pressure vessel design code.

1.3 DEFINITIONS

The **Purchaser** is the party that initiates the project and ultimately pays for its implementation. The term may also include an agent or consultant authorised to act for or on behalf of the Purchaser.

The **Contractor** is the party employed by the Purchaser to carry out all or any part of or manage the activities involved in creating the facility. The term also includes a sub-contractor employed by the Contractor.

The **Manufacturer/Supplier** is the party that manufactures or supplies vessels, equipment and services to perform the duties as specified by the Contractor and/or Purchaser.

The **foundation** is that part of the earth surrounding the vessel which actually carries the load.

Documents
Document Sharing Hub

Copyright Engineering Equipment and Materials Users Association
Provided by IHS Markit under license with EEMUA
No reproduction or networking permitted without license from IHS
Full document details: EEMUA 190-2005

Licensee=/, User=,
Not for Resale,

The **mound** is that part of the earth surrounding the vessel which is not part of the foundation.

1.4 GENERAL RESPONSIBILITIES OF THE PURCHASER

It is the responsibility of the Purchaser to provide the Contractor with the overall technical requirements of the project and all information necessary for the latter to carry out his work, including the composition and pertinent physical constants of the product to be stored, vessel size(s), site location and layout, soil survey details (if the survey is not carried out by the Contractor or his subcontractor) etc. The Purchaser may also choose to specify the applicable design code and materials of construction for the storage vessel(s), and other vessel parameters.

The Purchaser should also notify his requirements for quality assurance and certification to the Contractor and obtain confirmation that the latter is conversant with all statutory and/or local regulations governing the proposed installation and site.

1.5 PROJECT PLANNING

As with all projects, particularly multi-disciplinary ones such as designing and building a mounded storage facility, good, integrated project planning and management are essential to a successful outcome. Key activities and events for mounded storage projects are tabulated in Appendix E.

Documents
Document Sharing Hub

Copyright Engineering Equipment and Materials Users Association
Provided by IHS Markit under license with EEMUA
No reproduction or networking permitted without license from IHS
Full document details: EEMUA 190-2005

Licensee=/, User=,
Not for Resale,

2 TYPES OF STORAGE VESSEL

2.1 SELECTION OF STORAGE VESSEL TYPE

In addition to mounded storage, other types of vessel may also be used to store LPG under pressure at ambient temperatures:

- spheres
- bullets (above ground)
- submerged storage vessels.

Furthermore, refrigerated storage at atmospheric pressure is possible in single, double or full containment tanks as specified in BS 7777* and EEMUA Pub. 147.

Appendix I presents a flow chart for storage vessel selection, together with a table of applicable selection criteria.

2.2 MOUNDED STORAGE

Mounded storage is employed because it provides additional safety compared with above ground storage of gases in spheres or bullets. Its major advantage is that the occurrence of a BLEVE is virtually impossible. Other benefits of the mound are:

- it protects the vessel(s) against
  - heat radiation from a nearby fire
  - a pressure wave originating from an explosion
  - impact by flying objects
  - sabotage
- it satisfies environmental and aesthetic requirements
- it results in reduced site area due to less stringent inter-spacing requirements
- the safety distance to the site boundary can be reduced considerably.

The design aspects of mounded storage projects are in general more complicated than those for aboveground spheres or bullets. Particular attention should be paid to the interaction between vessel and soil, and to corrosion protection.

Existing pressure vessels codes, such as BSI, CEN, CODAP and ASME, do not address soil cover nor the support aspects of mounded storage. As it is not intended that mounded vessels be externally inspected during their lifetimes, the utmost attention is required to be given to the external coating and cathodic protection system to minimise the risk of (undetectable) corrosion.

Depending on site conditions, ground water level, and operational requirements, the vessels may be installed either at grade level or in an excavation. Vessels need to be installed above the highest known water table level, and the soil cover therefore usually protrudes above grade as an earth mound—hence the term ‘mounded storage’.

Vessels in open underground vaults and excavations are not considered to be mounded.

Mounded vessels are provided with connections (e.g. manholes, pressure relief valves and instrument connections) protruding through the top of the mound. Only if dictated

* BS 7777 will be withdrawn when prEN 14620 is published.

Documents
Document Sharing Hub
Copyright Engineering Equipment and Materials Users Association
Provided by IHS Markit under license with EEMUA
No reproduction or networking permitted without license from IHS
Licensee=/, User=,
Not for Resale,
Full document details: EEMUA 190-2005

by operational requirements should a bottom discharge in an inspection tunnel be considered.

Mounded storage vessels should be designed for a minimum life of 25 years.

If more than one vessel is placed in a single mound, then the minimum distance between the vessels depends on construction activities such as welding, coating, backfilling and compaction of the backfill material. A distance of 1 m is considered to be a practical minimum.

The maximum diameter is usually determined by factors such as design pressure, fabrication possibilities, post-weld heat treatment requirements, transport limitations, subsoil conditions and economy of design (8 m may be regarded as a practical upper limit).

For vessels which are founded on a sand-bed, the length of the vessel should be no more than eight times the diameter in order to prevent the design shell thickness being governed by longitudinal bending of the vessel due to possible differential settlements or to construction tolerances of vessels and foundations.

The maximum allowable length is usually determined by the subsoil conditions (especially if differential settlements are expected), size of available site, and economy of the design.

The above restrictions limit the maximum volume of a vessel to approximately 3500 m^3 gross. There is no limitation to the minimum size of the vessel, except for practical considerations.

Documents
Document Sharing Hub

Copyright Engineering Equipment and Materials Users Association
Provided by IHS Markit under license with EEMUA
No reproduction or networking permitted without license from IHS
Full document details: EEMUA 190-2005

Licensee=/, User=,
Not for Resale,

3 FOUNDATION AND EARTH MOUND

3.1 INFORMATION REQUIRED BY THE CONTRACTOR

The Purchaser is responsible for carrying out a detailed site soil investigation and communicating the necessary details to the Contractor (see 1.4). This investigation may be completed on behalf of the Purchaser by a specialist consultant/contractor practised in this type of work and, in particular, with knowledge of the geology of the area. The Contractor should review this information for completeness and accuracy to enable his detailed foundation engineering report to be issued (see 3.2.3).

The Purchaser will need to provide the Contractor with the following site details:

- Location and description of the construction site (including former use).
- Orientation of the vessel(s) relative to plant north. (In deciding on vessel orientation, the Purchaser or his specialist consultant responsible for plant layout, will need to take prevailing wind direction into account.)
- Climatic data (if not already known).
- Conceptual site development plan.
- Elevations of the planned construction site (ground levels and ground water levels).

Also, information on the subsoil conditions should be made available to the Contractor. This information should address the following aspects:

- geological description of the area
- seismicity of the area
- geotechnical description of the area.

Depending on the history of the site, it should be considered whether the soil investigation needs to include an environmental/chemical survey of subsoil and ground water. The scope of the site investigation is described in 3.2.1, but may require to be extended depending on the outcome of the gathered information.

3.2 SOIL INVESTIGATION

3.2.1 Fieldwork

The heterogeneity/stratigraphy of the subsoil should be investigated by cone penetration tests (CPTs) and borings. If the use of CPTs is not possible, an increased number of borings should be carried out.

All borings provided as part of the fieldwork should be combined with recovered undisturbed samples and executed standard penetration tests, both at average intervals of 1.5 m and at changes of strata.

Documents
Document Sharing Hub

Copyright Engineering Equipment and Materials Users Association
Provided by IHS Markit under license with EEMUA
No reproduction or networking permitted without license from IHS
Full document details: EEMUA 190-2005

Licensee=/, User=,
Not for Resale,

The minimum number of field tests is set out in the table below.

With CPTs	CPT	: centre to centre 20 ± 5 m
	BH	: at least 1, or 1 per 2 vessels
	USS/SPT	: each BH
	SCT	: at least 1, or 1 per 2 vessels
	DCT	: 1 BH location
	PM	: at least 1
With BHs	BH+USS/SPT	: centre to centre 20 ± 5 m
	SCT	: at least 1, or 1 per 2 vessels
	DCT	: 1 BH location
	PM	: at least 1

The positions of the CPTs and borings should be evenly distributed over the length of the vessels. Testing locations are indicated in the table below:

One vessel	:	along the centre line of the vessel
Two vessels	:	both outside edges of the vessels in the longitudinal direction
Three vessels or more	:	for outer vessels along the outside edges and for the inner vessel(s) along the centre line

The scope of work for the soil investigation may be reduced if reliable information from a geophysical survey is available (electromagnetic survey, geo-electric survey etc.).

Depending on the knowledge of the site and its specific geohydrology (e.g. presence of various aquifers, phreatic ground water level, piezometric levels from aquifers and level variations), the number of open standpipe piezometers should be determined. The minimum scope should include the installation of at least one open standpipe piezometer. Where an environmental survey is required, the open standpipe installation may be combined with the installation of an environmental monitoring well.

The piezometric level in the open standpipe needs to be monitored frequently both during execution of the soil investigation and during a period thereafter. The duration of this period will depend on the local climatological conditions.

3.2.2 Laboratory Work

The laboratory tests required to be carried out on recovered samples (undisturbed and disturbed) during the fieldwork are listed below.

Documents
Document Sharing Hub
Copyright Engineering Equipment and Materials Users Association
Provided by IHS Markit under license with EEMUA
No reproduction or networking permitted without license from IHS
Full document details: EEMUA 190-2005
Licensee=/, User=,
Not for Resale,

3.2.2.1 Classification Tests

Classification tests to be carried out on all samples are:

- visual description
- wet and dry unit weight
- water content.

Classification tests to be carried out on samples selected by the Contractor in consultation with the Purchaser:

- particle size analysis
- Atterberg limits.

3.2.2.2 Other Tests

- Consolidation tests (seven loading steps + one unloading step).
- Consolidated drained and/or consolidated undrained triaxial tests to obtain strength and stiffness parameters of the soil (subsoil and fill material).
- Chemical analysis of soil and ground water samples.
- Optimum moisture content (for compaction of subsoil and fill material).
- Electrical resistivity of soil.
- Environmental analysis of soil and ground water samples, the scope of which depends on history of the site and nearby industrial activity.

It is stressed that recovery, preservation, transport and storage of soil and ground water samples for environmental analysis needs to be done according to stringent procedures.

3.2.3 Reporting

A foundation engineering report is required from the Contractor. The topics to be covered need to include, but not be limited to, the following items:

Factual data:

- topography and geodetic levels of the site
- observed ground water levels (including variations)
- results from field and laboratory work
- stratigraphy along the axis of the vessels (indicating position of CPTs and BHs).

Engineering:

- discussion of obtained factual data against general site geology
- discussion of possible local subsoil variation
- recommended installation level of vessels relative to ground water levels

Documents
Document Sharing Hub

Copyright Engineering Equipment and Materials Users Association
Provided by IHS Markit under license with EEMUA
No reproduction or networking permitted without license from IHS
Full document details: EEMUA 190-2005

Licensee=/, User=,
Not for Resale,

- evaluation of load conditions during mound construction and operational lifetime, e.g. including horizontal loads on piled foundations as a consequence of mound construction.
- discussion of the recommended type of foundation (see 3.3 to 3.9) with respect to:
  - bearing capacity:
    - selection of governing load conditions for the critical stages of construction and for the operational lifetime of the mounded storage facility
    - susceptibility of the subsoil to liquefaction, if relevant
    - for a soil bearing foundation, subsoil bearing capacity during various stages of mound construction and during the operational lifetime of the mounded storage facility
    - for piled foundations with a raft or saddles, axial pile bearing capacity taking into account positive/negative skin friction and end bearing, group effect and lateral bearing capacity
  - settlement:
    - settlement analyses to be executed, specifying elastic, consolidation and creep components
    - selection of governing operational load
    - settlement of the vessel during hydrotesting (during construction and during in-service re-test conditions)
- minimum and maximum long-term subgrade (bedding) modulus along the vessel axis:
  - stability analyses of the mound slope for various load cases during construction and during operational lifetime (slip circle analyses)
  - construction of the mound; provide advice on:
    - the suitability of fill material for the foundation bed and the construction of the mound (including CP requirements)
    - compaction of the vessel foundation bed and the fill material surrounding the vessel
    - remedial measures to overcome severe erosion during construction, if relevant.

3.3 TYPES OF FOUNDATION

3.3.1 Soil Bearing Foundation

A soil bearing foundation which supports the vessel over its full length, on a sand-bed, is preferred. See Appendix B.1.1. This type of foundation provides continuous support, which allows an economic structural design of the vessel, an economic foundation method, and optimal cathodic protection.

In order to reduce settlements, it may be necessary to employ soil improvement methods. In that respect a preload embankment, preferably consisting of the fill material to be used during sand-bed and mound construction, is an economic solution. The duration of the preload period depends on the subsoil condition, especially the period required for the drainage of water from the subsoil. In some cases additional fill material may be required to minimise the preload period so as to meet the project schedule. During construction of the embankment and the subsequent preload period, settlements should be monitored and recorded. To that purpose, at least three settlement beacons should be installed along the future axis of each vessel. Monitoring

Documents
Document Sharing Hub
Copyright Engineering Equipment and Materials Users Association
Provided by IHS Markit under license with EEMUA
No reproduction or networking permitted without license from IHS
Licensee=/, User=,
Not for Resale,
Full document details: EEMUA 190-2005

of settlements during construction and the preload period allows for (foundation) design verification.

In addition, at specific locations soil improvement by replacement of the subsoil may be required. The combination of soil replacement and preloading is also a feasible option.

Although a soil bearing type of foundation is preferred, it will not always be possible. If, for example, long-term settlements are too large, a sound and/or economic structural design of the vessel may not be possible. Also, seismicity may affect the selection of the foundation type.

3.3.2 Sandbed on Piled Concrete Slab

If for settlement reasons the project does not allow the use of a soil bearing foundation, a piled foundation supporting a concrete slab may be considered. The vessel is then installed in a sand-bed of minimum thickness 1 m on top of the concrete slab. See Appendix B.1.2.

3.3.3 Vessels on Saddles

In some designs, the vessel is placed on saddles and subsequently on piled foundations (see B.1.3) as an alternative to the above foundation modes. This foundation mode is completely different from the philosophy described in this Guide. In fact, a conventionally supported vessel is created, but covered with a layer of soil.

An undesirable side effect occurs with piled saddles: the subsoil will settle but the saddles will not. This causes the mound to separate from underneath the vessel. It is for this reason that the design philosophy described in this document is not valid for mounded vessels on (piled) saddles. Due to the complexity in the design, construction and long-term (cathodic) protection, mounded vessels on piled saddles are not recommended.

3.4 SETTLEMENT OF SOIL BEARING FOUNDATIONS

3.4.1 Immediate Settlements

Settlements of the vessel and/or preload embankment occurring immediately during construction should be analysed and compared with predicted settlements (‘trending’).

3.4.2 Long-term Settlements

Settlement analyses should also address long-term settlements of the vessel during its operational lifetime. Predicted long-term settlements should be used to derive a subgrade modulus required for vessel design purposes.

Documents
Document Sharing Hub
Copyright Engineering Equipment and Materials Users Association
Provided by IHS Markit under license with EEMUA
No reproduction or networking permitted without license from IHS
Full document details: EEMUA 190-2005
Licensee=/, User=,
Not for Resale,

3.4.3 Total and Differential Settlements

In the settlement analysis, both the total and differential settlements of the vessel need to be addressed.

The maximum allowable total settlement of the vessel depends, amongst other things, on connecting piping and/or whether a tunnel is to be built to house a bottom discharge pipe.

Differential settlements of the vessel will affect its longitudinal slope and uniformity of support.

Settlements of the vessel may be considerably reduced by the application of soil improvement (see 3.3.1).

3.5 SETTLEMENT MONITORING

3.5.1 Settlement Monitoring During Preloading

Prior to installation of a preload embankment, settlement plates should be installed on the original ground level. The settlement plates may consist of a 1 x 1 m base plate with a 25 mm diameter vertical rod. The rod needs to extend above the preload embankment for measuring purposes. The settlement plates are to be removed at the end of the preloading period. Frequency of settlement monitoring should be in accordance with the table below:

Phase		Frequency
Preloading	Month 1 & 2	Weekly
	Month 3 & 4	Fortnightly
	Month 5 onwards	Monthly
Vessel installation		Weekly

In case of doubt on the stability of the preload embankment and/or mound as a consequence of the presence of a top clay, excess pore water pressures should be monitored during preload embankment and/or mound construction.

3.5.2 Settlement Monitoring During Operation

Permanent reference points should be located longitudinally on top of the vessel for monitoring vessel settlements. The maximum spacing of these reference points should be approximately twice the vessel diameter. A minimum of three reference points, two near the vessel ends and one in the middle, should be installed to enable identification of possible vessel bending. Nozzles or domes may be used for this purpose.

Vessel settlements should be monitored during its operational life. The monitoring frequency will depend on the magnitude of the predicted settlements and on the associated period. The results should be compared with the predicted settlements. If

Documents
Document Sharing Hub
Copyright Engineering Equipment and Materials Users Association
Provided by IHS Markit under license with EEMUA
No reproduction or networking permitted without license from IHS
Licensee=/, User=,
Not for Resale,
Full document details: EEMUA 190-2005

actual settlement exceeds that predicted and/or the rate of settlement increases, specialist advice should be obtained concerning the need for corrective action.

For site fabricated vessels, which usually undergo hydrotest on their foundation, test settlement monitoring should be performed during the test (5.2). Settlements should be monitored for the weight loads at 0, 25, 50, 75 and 100% filling, and after 48 hours with the vessel completely filled. The settlement rate during this testing period should diminish with time as otherwise there would be a danger of instability. If the rate does not diminish adequately, the Purchaser needs to be informed immediately. The vessel should be partially emptied, and geotechnical and mounded vessel specialists consulted.

3.6 FOUNDATION DESIGN

3.6.1 General

Foundations should be designed, constructed and monitored in accordance with applicable local and international standards. In all phases of the project, the design loads and load combinations described in Sec. 4 should be considered. The vessels should be installed at least 0.6 m above the highest groundwater level on a sand-bed of at least 1 m thickness in order to obtain proper bedding-in.

The foundation of the vessel needs to be constructed such that during the operational life of the vessel, its longitudinal slope will be between 1:200 minimum and 1:50 maximum. The former is the minimum for effective drainage whilst the latter is intended for minimising dead stock. Hence in the design phase the predicted immediate and long-term settlements along the axis of each vessel need to be taken into account in determining the slope.

3.6.2 Operational Phase of Vessel

In the operational phase, it is assumed that the vessel is supported over an angle of 120°.

The calculation of contact pressure at the vessel–foundation interface is shown in A.4.2.10 and Figure A.3.

The loads on the vessel, and hence on the foundation, are as described in A.4.2. The minimum safety factor during operations should be 2.

3.6.3 Construction Phase of Vessel

During construction, it may be advantageous to support the vessel over an angle of less than 120° (with a minimum of 60°).

In the case of on-site vessel assembly, the maximum foundation loading will occur during hydrostatic pressure testing. The maximum load will consist of the weight of the vessel and the contained water. The bearing capacity of the foundation needs to be verified for this load condition. Special attention should be given in that respect to the presence of welding trenches.
The minimum safety factor for the bearing capacity and overall vessel stability during the hydrostatic pressure test should be 1.5.

Documents
Document Sharing Hub

Copyright Engineering Equipment and Materials Users Association
Provided by IHS Markit under license with EEMUA
No reproduction or networking permitted without license from IHS
Full document details: EEMUA 190-2005

Licensee=/, User=,
Not for Resale,

Additionally, the vessel should be checked for a reduced angle of support, as the magnitude of the design coefficients K_M, K_N and K_S depends on the angle of support (A.4.4–A.4.6).

3.7 MOUND DESIGN

3.7.1 Geometry

The slope of the mound is not to exceed the natural slope of the fill material and should be 1:1.5 maximum. Following the results of the soil investigation, a slip circle analysis should be performed to verify the stability of mound. When performing such a calculation it should be noted that the angle of friction along the vessel–soil interface and the effective stress in a zone next to the vessel is lower than in an 'all soil' situation.

3.7.2 External Loads

The purpose of the mound is to protect the vessel against external events such as radiation in case of a fire, flying objects and sabotage; hence the thickness of the cover should be at least 0.5 metre. Temporary loadings on the vessel by construction equipment on the mound should be avoided when the thickness of the cover is less than 1 metre.

3.7.3 Erosion Protection

The slopes and top of the mound need to be protected against erosion. This can be effected by means of a suitable covering or by consolidation with vegetation.

Suitable types of covering include a flexible bituminous layer, prefabricated stone slabs and open concrete tiles. To prevent the possibility of gas accumulation inside the mound, continuous impermeable coverings should not be used.

Where the preferred method of protection is consolidation with vegetation, the ideal type is soil covering plants with widespread root systems that grow slowly (to reduce the need for trimming), e.g. cotoneaster. If grass is used, the sand fill should first be covered with at least 0.3 m of fertile cohesive soil.

Open drain channels should be constructed alongside the toe of the mound. These channels need to be able to cope with the rainwater run-off from the mound specified in the design and, if applicable, the run-off from surrounding higher areas. The mound top needs to have a slight downward slope to allow effective drainage. Only minimal rainwater percolation should be allowed through the erosion protection. Rainwater accumulation inside the mound needs to be avoided as this can lead to instability of the mound. No irrigation system should be installed on the mound as this might increase the corrosivity of the mound material.

Documents
Document Sharing Hub
Copyright Engineering Equipment and Materials Users Association
Provided by IHS Markit under license with EEMUA
No reproduction or networking permitted without license from IHS
Licensee=/, User=,
Not for Resale,
Full document details: EEMUA 190-2005

3.8 FOUNDATION AND MOUND MATERIAL

In selecting the material for the foundation and the mound, consideration needs to be given to the following:

- In the case of multiple vessels there is limited accessibility for mechanical fill and compaction equipment to the area in-between the vessels. In these cases fill material should be chosen for ease of handling.
- The fill material needs to be compactable in order to minimise settlements.
- The fill material needs to be suitable to allow proper functioning of the cathodic protection system (4.5.3). Sea sand or any other fill material undesirable for reasons of corrosivity is not to be used.
- Although mounds are not intended to be removed for inspection, excavation of the vessel(s) may be required (e.g. by governmental regulations).

For the above reasons, sand should be used for both the sand-bed and mound. The sand needs to fulfil the following requirements:

- be clean
- the maximum silt content (particles smaller than 0.063 mm) should not exceed 10% by weight and the maximum organic material content should not exceed 3% by weight
- the maximum sulphate content should be 0.02%
- the maximum chloride content should be 0.02%
- the maximum particle size should be 2 mm
- grain size distribution should have a uniformity coefficient (D60/D10) of between 4 and 10.

In areas where sand is difficult to obtain, at least 0.3 m of sand should be placed around the vessel to protect the coating.

3.9 CONSTRUCTION OF FOUNDATION AND MOUND

3.9.1 Foundation

The sand-bed foundation, that is the bedding associated to the 120° bottom support angle, should be prepared in layers of a maximum thickness of 0.3 m. Each layer should be compacted to at least 95% of the maximum dry density. The maximum dry density should be determined in accordance with ASTM D 1557. The in situ density should be determined by either cone penetration testing or the replacement method in accordance with ASTM D 2167.

The cylindrical bottom profile of the vessel should later be cut in the sand-bed by excavation. A steel template of the same curvature as the vessel should be used to shape the sand-bed to the required profile. Over-excavation should be avoided.

Due to construction tolerances, it is recommended that the axis of the vessel should deviate from a straight line by not more than 0.3% of the vessel length.

Documents
Document Sharing Hub

Copyright Engineering Equipment and Materials Users Association
Provided by IHS Markit under license with EEMUA
No reproduction or networking permitted without license from IHS
Full document details: EEMUA 190-2005

Licensee=/, User=,
Not for Resale,

The construction procedure for the foundation depends on the fabrication method for the vessel; the procedure needs to ensure that the required uniform support for the vessel is provided.

If the vessel has been assembled elsewhere before it is placed on its foundation, the deviations of the vessel axis from a straight line should be measured, and the sand-bed shaped accordingly to obtain a good fit of the vessel in the sand-bed and hence an even support.

If the vessel is assembled on its foundation, the shape of the sand-bed should be made in sections with a length equal to the length of the vessel section to be placed on it. Each foundation section should be completed just before the corresponding vessel section is placed on it and after the previous vessel section has been at least tack welded in place. This procedure will help to obtain an even support of the vessel.

Depending on the fabrication method, it may be necessary to dig trenches in the sand-bed for welding and inspection of circumferential seams of the vessel sections. The sides of the trenches need to be properly supported, for example with sandbags. After the weld inspection has been carried out, the hydrostatic pressure test successfully finished and the coating applied, the trenches are to be carefully backfilled with properly compacted sand. Coating of welds should only be applied after hydrostatic pressure testing. As it will be difficult to achieve the same compaction rate as for the bed already placed, the number and sizes of the trenches should be restricted to a minimum. The method of backfilling and compaction should be approved by the Purchaser.

Depending on the distance between the trenches, the local code requirements (which might require full vessel support during hydrostatic pressure testing) and the calculations, it may be required to temporarily backfill the trenches prior to the hydrostatic pressure test. In this way the maximum load on the sandbed is reduced.

To avoid too much disturbance of the foundation during construction, the shoulders of the foundation should have a horizontal part of at least 2 m wide before sloping down to grade.

After completion of construction of the vessel but prior to the hydrotest, the foundation needs to be repaired and re-compacted where required.

3.9.2 Mound

Horizontal support of the vessel by the mound is not assumed in the vessel design and is therefore not required. Too much compaction during emplacement of the mound may in fact impose excessive loads on the vessel. In view of this, it is advised that the mound should be compacted to 90% of the maximum dry density only.

If during construction a foundation with a reduced angle of support has been used, it should be built up with well-compacted sand (95% of the maximum dry density) to an angle of support of 120° before completing the mound (see Appendix B.2).

Refer to 3.7.3 for erosion protection.

Documents
Document Sharing Hub

Copyright Engineering Equipment and Materials Users Association
Provided by IHS Markit under license with EEMUA
No reproduction or networking permitted without license from IHS
Full document details: EEMUA 190-2005

Licensee=/, User=,
Not for Resale,

4 VESSEL

4.1 DESIGN

4.1.1 General

The design guidelines set out in this document are largely based on (BSI) PD 5500. However, different codes may be preferred in certain countries, e.g. CODAP-95 or ASME VIII. Vessels to be installed in the EEA and Switzerland must comply with the PED. Vessels manufactured to harmonised standard EN 13445 will have presumption of conformity with the PED. Where other codes (including the present guidelines) are used, compliance with the essential safety requirements of the PED must be demonstrated. Annex Z of PD 5500 offers guidance on how this can be achieved.

Whilst specific articles in the aforementioned codes are sufficient for establishing the thickness of the shell and domed ends, the codes may have different approaches for establishing the required number and sizes of stiffening rings. The method employed in EN 13445 is based on the PD 5500 approach.

The recommended calculation method for stiffening rings is described in Appendix A. Other methods may be used with the approval of the Purchaser.

The principle of the design of the vessel is that the axisymmetrical loads are carried by the shell plates, while bending stresses due to non-axisymmetrical loads are carried by stiffening rings (except for small diameter, unstiffened vessels).

The vessels are subjected to internal vapour and hydrostatic liquid pressure (positive and negative) and to external loads due to the mound (in the axial and radial directions). Moreover, they may be subjected to live loads and earthquakes, depending on local conditions, and even to blast waves due to exploding gas clouds.

If a vessel is to be hydrostatically pressure tested on its foundation, longitudinal seams need to be avoided in the bottom 120° of the circumference.

The vessel heads should have a torispherical or hemispherical shape.

For an optimal vessel design, the thickness of the shell plates should be determined by the maximum internal design pressure or the external load caused by the mound in combination with negative internal pressure (if applicable), whichever is governing. For long vessels with a relatively small diameter, it is necessary to avoid shell plate thickness being governed by the longitudinal stresses caused by bending, friction etc. (see *Governing load* below).

Nozzles and manholes should be designed to withstand both internal and external (soil pressure and piping) loads in accordance with PD 5500. Lateral soil pressure on nozzles and manholes can be eliminated by the use of sleeves as described in 4.4.6.

The following guidelines are recommended for determining vessel dimensions:

Overall dimensions

- the vessel diameter should not exceed 8 m
- the required volume should not exceed 3500 m³.

Documents
Document Sharing Hub

Copyright Engineering Equipment and Materials Users Association
Provided by IHS Markit under license with EEMUA
No reproduction or networking permitted without license from IHS
Full document details: EEMUA 190-2005

Licensee=/, User=,
Not for Resale,

Governing load

- The vessel length should not exceed 8 times the vessel diameter. In vessels with a length-to-diameter ratio exceeding this limit, the longitudinal stresses caused by bending and frictional forces will govern the shell plate thickness, which leads to a less economical design.

Material and welding constraints

- For vessel cylinder:
  - The ratio of plate thickness to vessel diameter should be not less than 1/400.
  - The ratio of external to internal vessel diameter should not exceed 1.3. (This limit is imposed by the range of applicability of the equations used in Section 3 of PD 5500 which are based on mean diameter rules—see 3.2.2 Note 1 of that publication. For mounded storage vessels, practical values of the ratio will be well below the limit.)
- For hemispherical domed ends:
  - plate thickness of domed ends should not be less than 12 mm (see A.5.3)
  - ratio of plate thickness of domed ends to vessel diameter should not be less than 0.002 nor exceed 0.16.
- For torispherical domed ends:
  - the guidelines for hemispherical domed ends apply
  - the inside knuckle radius should not be less than 0.06 times the vessel diameter
  - the inside knuckle radius should not be less than twice the plate thickness
  - the inside spherical radius should not exceed the vessel diameter.
- For stiffening rings:
  - For vessels with a diameter of 3.5 m and greater, internal stiffening rings are normally required.
  - The maximum distance between the stiffeners is determined by the circumferential buckling stress in the shell plates.
  - The size of the stiffening rings depends on the load on the vessel and the distance between the rings. The thickness of the stiffener web and flange should not exceed the thickness of the shell. For economic reasons, the stiffener webs and flanges should be of the same material grade and thickness as the shell.
  - The ratio of distance between stiffeners to vessel diameter should be of the order of 1:2 to 1:1. Ratios up to 2:1 may be used, but will lead to less economic designs.
  - Stiffeners placed close to the transition of cylinder to domed end are very ineffective (A.2.2 and A.5.3).

The corrosion allowance will be specified by the Purchaser. The interpretation of corrosion allowance is shown in Figure 4.1.

Documents
Document Sharing Hub

Copyright Engineering Equipment and Materials Users Association
Provided by IHS Markit under license with EEMUA
No reproduction or networking permitted without license from IHS
Full document details: EEMUA 190-2005

Licensee=/, User=,
Not for Resale,

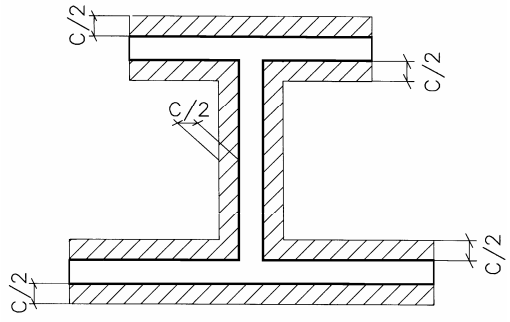

'C' is the corrosion allowance

Figure 4.1

4.1.2 Design Conditions

The pressure–temperature curves for butane, propane and mixtures thereof are shown in Figure 4.2.

The ABP of the product is to be used as the lower design temperature and will be specified by the Purchaser.

If it can be ensured that due to operational safeguards the ABP can never be reached, a design temperature higher than the ABP or a decreased design pressure may be used. Confirmation from the Purchaser needs to be obtained.

4.1.3 Design Loads

The loads listed in 4.1.3.1 to 4.1.3.9 need to be taken into account in the design.

4.1.3.1 Dead Weight of the Vessel

Refer to Appendix A.4.2.1.

4.1.3.2 Weight of Liquid in the Vessel

Refer to A.4.2.2.

The densities of liquids for design pressure are to be taken as follows:

- for propane (C_3H_8) : 510 kg/m^3 at 15°C
- for butane (C_4H_{10}) : 585 kg/m^3 at 15°C

4.1.3.3 Internal Design Pressure

Refer to A.4.2.3.

Documents
Document Sharing Hub
Copyright Engineering Equipment and Materials Users Association
Provided by IHS Markit under license with EEMUA
No reproduction or networking permitted without license from IHS
Licensee=/, User=,
Not for Resale,
Full document details: EEMUA 190-2005

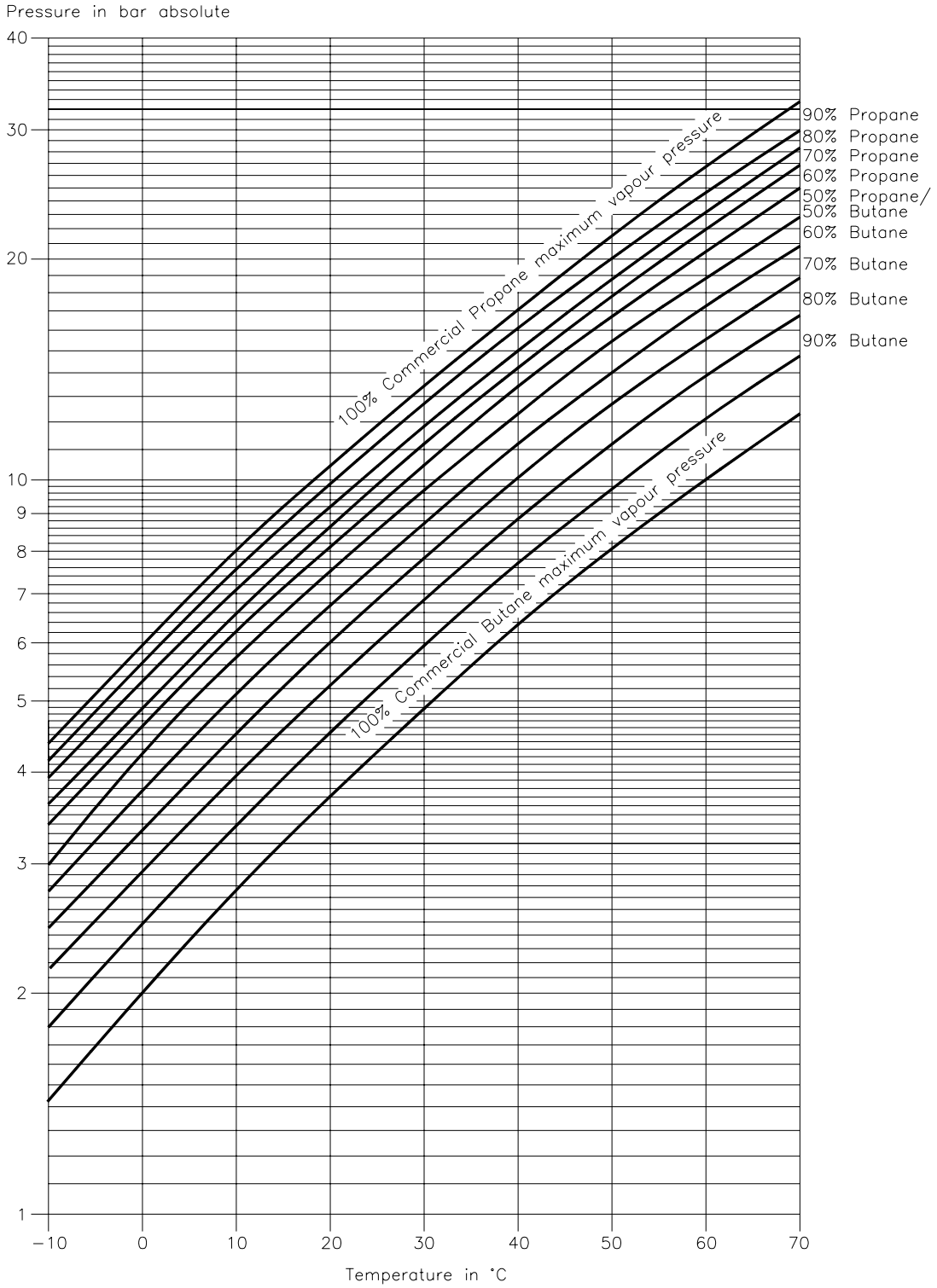

Figure 4.2 Vapour Pressure–Temperature Relationships for Pressurised Commercial Butane–Propane Mixtures by Volume

Documents
Document Sharing Hub
Copyright Engineering Equipment and Materials Users Association
Provided by IHS Markit under license with EEMUA
No reproduction or networking permitted without license from IHS
Licensee=/, User=,
Not for Resale,
Full document details: EEMUA 190-2005

4.1.3.4 Negative Internal Pressure

Refer to A.4.2.4. The negative internal pressure should be taken as −0.5 bar (ga), unless agreed otherwise with the Purchaser.

4.1.3.5 Loads due to the Mound

Refer to A.4.2.5.

The weight of the mound above the vessel is transmitted by the vessel to the foundation and will result in radial loads on the vessel (A.4.2.5.1).

If a vessel is installed in an excavation, it is possible that after backfilling the sides of the excavation exert a horizontal supporting pressure on the vessel. This beneficial effect depends very much on the quality and compaction of the fill material. For vessels installed above grade level only horizontal support pressure from the mound is to be taken into account.

Passive and active soil pressures at the heads of the vessels are to be taken into account in the design (A.4.2.5.2).

Mounded storage vessels ought not to be exposed to traffic or similar live loads on top of the mound. If this cannot be avoided, a suitable live load shall be taken into account in the design. The weight of pipelines, pipe bridges, etc. are also to be taken into account, if applicable.

4.1.3.6 Loads due to Uneven Support by the Foundation

Refer to A.4.2.6 and Appendix C.

Uneven support of the vessel may occur due to:

- variation in subsoil characteristics along the length of the vessel, which may cause a variation in support, as the vessel will settle as a rigid body
- construction tolerances of the vessel and its foundation, due to which the vessel will normally not sit perfectly on the foundation.

To allow for the effect of tolerances and uneven support, a maximum and a minimum soil reaction are assumed, as shown in Appendix C. Both soil reaction distributions are to be taken into account. Appendix C also gives the formulae for calculating the resulting bending moments, shear loads, soil reactions and vessel deflections, based on these assumptions.

Based on the soil investigation data, calculations of bending moments, shear forces etc., taking into account the long-term bedding/subgrade modulus of the subsoil, should be carried out using a ‘beam on elastic foundation’ method. The results of these calculations should be compared with those of the calculations performed in accordance with the guidelines of Appendix C. The larger bending moments, shear forces, etc., are to be used for the design of the vessel. These calculations may be dispensed with if it is obvious from the variation in subgrade modulus that the resulting bending moments, etc. will be smaller than those resulting from Appendix C.

Documents
Document Sharing Hub

Copyright Engineering Equipment and Materials Users Association
Provided by IHS Markit under license with EEMUA
No reproduction or networking permitted without license from IHS
Full document details: EEMUA 190-2005

Licensee=/, User=,
Not for Resale,

Note.— The bedding/subgrade modulus as mentioned above is not the elastic short-term bedding modulus, as sometimes determined by a field test, but is the load of the vessel divided by the long-term settlement at that location (kN/m).

4.1.3.7 Loads due to Temperature and Internal Pressure Variations

Refer to A.4.2.7.

Variations in vessel temperature and internal pressure will cause variations in the length and radius of the vessel. With regard to variations of the vessel length, the following effects need to be taken into account in the vessel design:

- increase of the soil pressure on the domed ends of the vessel
- longitudinal stresses in the vessel caused by friction and restrained expansion.

The magnitude of these effects depends on the length and the diameter of the vessel, the thickness of the soil cover and the configuration of the soil cover over the domed ends.

Note.— The effects of temperature and pressure variation cause proportional changes in the length of the vessel. For example, a temperature variation of 40°C will cause, for an unrestrained 40 m long carbon steel vessel, a change in length of 19 mm, whilst the length of an unrestrained 40 m long propane vessel will increase by some 15 mm when the vessel is fully pressurised. The surrounding soil will be unable to fully restrain the vessel and the ends of the vessel will move through the soil.

4.1.3.8 Loads due to Earthquake

Refer to A.4.2.8.

If the vessel has to be designed against earthquakes, the earthquake load is usually introduced into the calculation as a horizontal load on the vessel. A vertical component may also be taken into account, although its overall effect is usually not significant.

The required design earthquake load is usually specified in local building codes, expressed in terms of horizontal acceleration and sometimes also vertical acceleration.

For large vessels the effect of liquid sloshing should be considered.

The consequences of liquefaction of the subsoil, if relevant, also needs to be considered.

4.1.3.9 Loads due to an External Explosion

Refer to A.4.2.9.

An explosion of a gas cloud in the vicinity of a mounded storage vessel would result in a pressure increase on the soil cover. This increase in pressure can be taken into account in the analysis as an increase of the weight of the soil cover.

The magnitude of the overpressure will be stated by the Purchaser. It may, typically, vary between 0 and 0.15 bar. The overpressure should be multiplied by a suitable reflection coefficient. Because of the damping effect of the mound, a reflection

Documents
Document Sharing Hub
Copyright Engineering Equipment and Materials Users Association
Provided by IHS Markit under license with EEMUA
No reproduction or networking permitted without license from IHS
Licensee=/, User=,
Not for Resale,
Full document details: EEMUA 190-2005

coefficient of 1.5 should be used instead of the more commonly used (in codes) reflection coefficient of 2.

4.1.4 Load Combinations

In the design of the vessel, the loads previously described need to be combined, as applicable, with the hydrostatic test pressure, normal operating loads, retest pressures and those caused by emergencies. Explosion and earthquake loads may be assumed not to occur at the same time, and not during pressure testing.

Note.— The soil cover will not be present during the initial hydrostatic pressure test, but *will be* during a possible retest after a period of operation.

4.2 MATERIALS

Recommended materials for all parts of the vessel, including those welded directly to that vessel, are given in Appendix D. All materials for use in vessels need to fulfil the following requirements:

- the minimum impact values (Charpy V notch) at the required impact test temperatures given in Table D.2 of PD 5500.
- the carbon content of steels used is not to exceed 0.23%, except for forgings for which the carbon content is not to exceed 0.25%.
- In addition, one of the following requirements for carbon equivalent based on ladle analysis is to be satisfied:
  - $C_{eq} = C + Mn/6 \leq 0.43$ (1)
  - $C_{eq} = C + Mn/6 + (Cr + Mo + V)/5 + (Cu + Ni)/15 \leq 0.45$ (2)

  Formula (1) may be used if the material standard specifies C and Mn only. Otherwise formula (2) is to be used, in which case all the elements mentioned are to be determined per heat.
- All steel plates are to be through-thickness tensile tested in accordance with BS EN 10164 and have a reduction in area of at least 35%.
- All steel plates shall have been ultrasonically tested at the mill in accordance with the requirements of BS EN 10160:
  - Table 4 material body examination S1
  - Table 5 material edge examination E2.
- Materials not included in Appendix D may be used provided they meet the criteria given above plus the following restrictions:
  - their specified minimum yield strength does not exceed that of the steel grades given in Appendix D
  - steels are to have guaranteed impact properties at test temperature in accordance with the requirements laid down in PD 5500 Table D.2
  - only fully killed steels are to be used.

Production weld test plates should be prepared at a rate of two test plates per 100 m of butt weld or part thereof (circumferential plus longitudinal). These will be considered representative of the welding on the vessel, or on a group of similar vessels made of the same material and ordered to the same specification with the same welding

Documents
Document Sharing Hub
Copyright Engineering Equipment and Materials Users Association
Provided by IHS Markit under license with EEMUA
No reproduction or networking permitted without license from IHS
Licensee=/, User=,
Not for Resale,
Full document details: EEMUA 190-2005