IHS Markit®

Far-field sound radiation from circular ducts

ESDU 01015
Issued December 2001
With Amendment A
May 2019

Associated software: ESDUpac A0115
ESDUpac B0115
VIEWpac M0115

ROYAL AERONAUTICAL SOCIETY

Endorsed by The Royal Aeronautical Society

Documents
Document Sharing Hub

IHS Markit copyright material

ESDU Data Items

Data Items provide validated information in engineering design and analysis for use by, or under the supervision of, professionally qualified engineers. The data are founded on an evaluation of all the relevant information, both published and unpublished, and are invariably supported by original work of ESDU staff engineers or consultants. The whole process is subject to independent review for which crucial support is provided by industrial companies, government research laboratories, universities and others from around the world through the participation of some of their leading experts on ESDU Technical Committees. This process ensures that the results of much valuable work (theoretical, experimental and operational), which may not be widely available or in a readily usable form, can be communicated concisely and accurately to the engineering community.

We are constantly striving to develop new work and review data already issued. Any comments arising out of your use of our data, or any suggestions for new topics or information that might lead to improvements, will help us to provide a better service.

The preparation of this Data Item

The work on this particular Data Item was monitored and guided by the Duct Liners Working Party which has the following membership:

Dr P. Joseph	—	Institute of Sound and Vibration Research, University of Southampton
Prof. Y.W. Lam	—	University of Salford
Mr R.A. Pinker	—	QinetiQ, Pyestock
Mr D.C. Riordan	—	Bombardier Aerospace Short Brothers plc, Belfast
Mr P. Robinson	—	Dowty Aerospace Propellers, Gloucester

and which was appointed by Aircraft Noise Committee. The Aircraft Noise Committee first met in 1971 and now has the following membership:

Chairman

Mr D.C. Riordan	—	Bombardier, Belfast (Short Brothers plc)

Members

Mr S. Arrowsmith*	—	European Aviation Safety Agency (EASA), Germany
Mr W.D. Bryce	—	Bryce Research (Member Emeritus)
Ms C.L. Burley*	—	NASA, Langley Research Center, USA
Dr T. Imamura*	—	The University of Tokyo, Japan
Prof. P. Joseph	—	Institute of Sound and Vibration Research, Southampton
M. P. Lempereur	—	Airbus France, Toulouse, France
Mr C.J. Mead	—	Aero Acoustics Ltd, Surrey, UK
Mr A.D. Moore	—	Rolls-Royce plc, Derby
Mr D. Patience	—	BAE SYSTEMS, Frimley
Mr R. Pinker*	—	Pinker Noise Consultancy, UK
Dr D. Rhodes	—	Civil Aviation Authority, Environmental Research & Consultancy Department (ERCD), London
Dr B.J. Tester	—	Institute of Sound and Vibration Research, Southampton.

* Corresponding Member

The technical work involved in the assessment of the available information and the construction and subsequent development of the Data Item was undertaken by

Dr C.B. Chinoy	—	Head of Aircraft Noise and Structural Dynamics Group.

AVA Documents
Document Sharing Hub

Full document details: ESDU 01015 A 2019
IHS Markit copyright material

FAR-FIELD SOUND RADIATION FROM CIRCULAR DUCTS

CONTENTS

		Page
1.	NOTATION	1
2.	INTRODUCTION	3
3.	SCOPE AND APPLICATIONS	3
4.	LIMITATIONS AND ASSUMPTIONS	4
5.	THEORETICAL BACKGROUND	5
5.1	Single Mode Directivity	5
5.2	Multimode Directivity	6
5.3	Presence of Flow	7
6.	COMPUTER PROGRAMS	7
6.1	Input Data and Output	8
7.	DERIVATION AND REFERENCES	9
8.	EXAMPLE	10
APPENDIX A –	ESDU DATA FILE	15
A.1	NOTATION	15
A.2	DATA FILE STRUCTURE STANDARD	17
A.3	USING THE DATA FILE	17

Documents
Document Sharing Hub
Full document details: ESDU 01015 A 2019
IHS Markit copyright material

FAR-FIELD SOUND RADIATION FROM CIRCULAR DUCTS

1. NOTATION

		Units	
		SI	*British*
A_{nm}	amplitude of mode n, m *	Pa	lbf/ft^2
a	radius of duct	m	ft
c	speed of sound	m/s	ft/s
D_{nm}	single mode directivity function		
f	frequency	Hz	Hz
H_{nm}	transfer function defined in Equation (5.2)		
i , j	indices used in Equation (5.3)		
i_1 , j_1	index values defined in Equation (5.6)		
J_n	Bessel function of first kind of order n		
J'_n	derivative of Bessel function of first kind of order n with respect to argument		
k	wave number $(= 2\pi f/c)$	m^{-1}	ft^{-1}
$\bar{k}$	transformed wave number in presence of flow	m^{-1}	ft^{-1}
k_{nm}	parameter defined in Equation (5.5)	m^{-1}	ft^{-1}
M	Mach number of flow (positive if flow is in direction of sound propagation; negative otherwise)		
m	mode number in radial direction $(m = 1, 2, 3 ....)$†		
m_0	highest radial mode order that can propagate for given n		
n	mode number in circumferential direction $(n = 0, 1, 2 ....)$†		
P_{nm}	far-field pressure corresponding to incident mode, (n, m)	Pa	lbf/ft^2
p	far-field sound pressure	Pa	lbf/ft^2
p_{ref}	arbitrary reference sound pressure	Pa	lbf/ft^2
Q	multimode directivity function		
q	index defining nature of source (see Equation (5.13))		
r	distance from duct termination to observer (see Sketch 1.1)	m	ft
$\bar{r}$	transformed distance in presence of flow	m	ft

For footnotes see end of Section 1

Documents
Document Sharing Hub
Full document details: ESDU 01015 A 2019
IHS Markit copyright material

S	function defined in Equation (5.7)		
t	time	s	s
v	parameter defined in Equation (5.7)		
W	radiated sound power	W	ft lbf/s
w	variable of integration in Equation (5.7)		
Y_n	Bessel function of second kind of order n		
Y'_n	derivative of Bessel function of second kind of order n with respect to argument		
α_{nm}	parameter defined in Equation (5.12)		
ζ	variable in Equation (5.7)		
θ	angle to axis (see Sketch 1.1)	rad‡	rad‡
$\bar{\theta}$	transformed angle in presence of flow	rad	rad
μ_{nm}	modal transverse wave number	m^{-1}	ft^{-1}
ρ	ambient density	kg/m^3	slug ft^3
ϕ	azimuthal angle	rad	rad
Ω	function defined by Equation (5.8)		
ω	angular frequency	s^{-1}	s^{-1}

* Note that mode amplitude level values input to the computer program must be in the form $20 \log(A_{mn}/p_{ref})$ which is expressed in dB.

† In this Item a plane wave is denoted by (0, 1) *i.e.* $n = 0$, $m = 1$. Elsewhere, (0, 0) is sometimes used.

‡ Note that values input to the computer program must be in degrees.

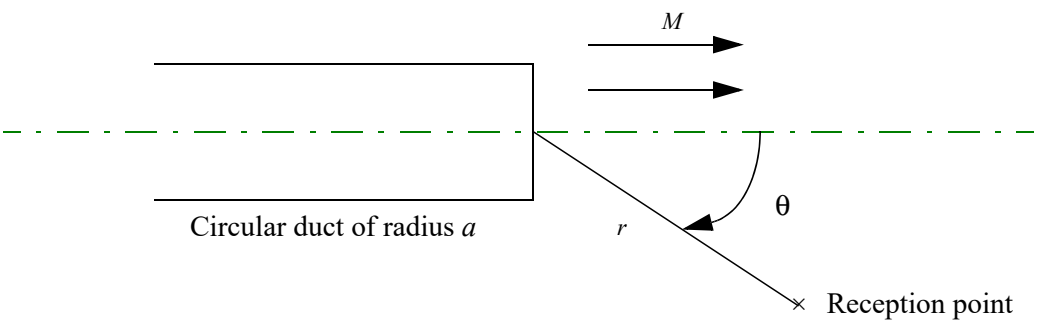

Sketch 1.1

Documents
Document Sharing Hub
Full document details: ESDU 01015 A 2019
IHS Markit copyright material

2. INTRODUCTION

This Item provides a computerized means to estimate the far-field, axisymmetric, sound radiation pattern from the radiating end of an unflanged, semi-infinite hard-walled circular duct. The radiation pattern at any frequency is described in terms of a directivity function which is non-dimensional and relates the far-field mean square pressure at any polar angle to the duct axis to the net sound power radiated from the duct. The directivity function may be obtained either for a specified single mode or for multimode sound radiation. For a single mode, the directivity function relates the far-field acoustic pressure to the pressure amplitude of the mode incident at the duct termination. The multimode calculation assumes that the modes are incoherent and uses a weighted model in which the user can select one of four types of noise source. The options offered are of assuming equal energy per mode above cut-off or excitation by either incoherent monopoles or axial dipoles uniformly distributed over the duct cross-section. The user also has the option to estimate the far-field pressure pattern for any modal amplitude distribution for up to fifty incoherent modes with relative amplitudes that may be specified.

3. SCOPE AND APPLICATIONS

The computer program contained in this Item permits the user to estimate the axisymmetric radiation pattern from circular ducts. It may be applied to noise sources such as aircraft turbofan engines, large exhaust stacks and mufflers. An illustration of the sound radiation pattern for the first case described in the example of Section 8 is shown in Sketch 3.1.

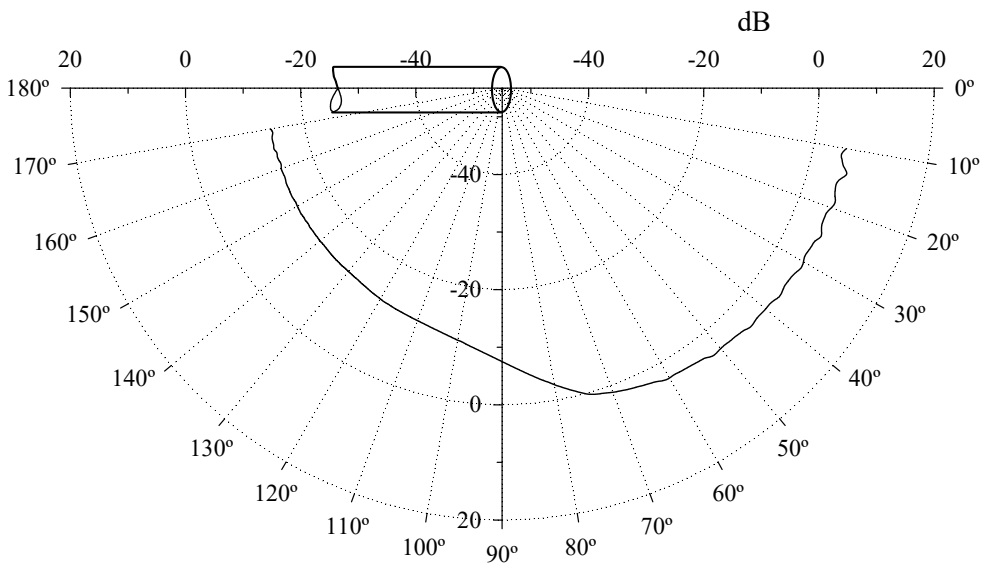

Sketch 3.1

The Item allows the user to calculate, in non-dimensional form, the ratio of mean square far-field radiated pressure to incident sound energy for different source distributions. In addition to the frequently-made assumption of equal energy per mode, the user may assume incoherent monopole sources as would be appropriate for unsteady combustion, or incoherent axial dipole sources as may be found from a set of fan blades with small stagger angle. In most cases of duct-borne noise radiation, however, the source distribution producing the noise is unknown. By assuming that it contains a mixture of monopole and dipole sources, predictions of the pressure-power ratios obtained by assuming entirely monopole sources and again assuming entirely dipole sources, may be used to deduce upper and lower bound values. The difference between them may be interpreted as a measure of the confidence in the predicted pressure-power ratio.

Documents
Document Sharing Hub
Full document details: ESDU 01015 A 2019
IHS Markit copyright material

A fourth option is also offered based on a set of mode amplitude levels at the duct termination which are input by the user. These may have been obtained either by measurement or by a computer prediction. The far-field mean square pressure at unit distance is, in this case, calculated.

In summary, the options given to the user to model the source distribution are as follows:

(i) equal energy per mode incident on the radiating end,

(ii) incoherent axial dipoles uniformly distributed over the cross-section,

(iii) incoherent monopoles uniformly distributed over the cross-section

and (iv) a mode amplitude distribution specified for individual modes by the user. If the actual mode amplitudes are specified, then the sound pressure levels at a reference distance of 1m or 1ft in the far-field in a lossless atmosphere are estimated. If relative mode amplitudes are specified, then relative pressure levels will be estimated.

The Item can also be used to help determine the sound power radiating from a duct opening when only a limited number of measurement points are available. The sound power may be obtained by integrating the normal component of the sound intensity over a surface enclosing the duct opening. If not all measurement locations are readily accessible, this Item may be used to infer values at these locations.

The approach of this method is similar to that of Rice (Reference 6) although a difference in detail is that Rice uses baffled (flanged) duct radiation patterns and hence only addresses the forward arc. Assuming equal power per mode, Rice shows good agreement between his predictions and measured data from some ducted turbofan engines. The far-field directivity predicted using the method in this Item agrees exactly with that predicted by Rice for the forward arc and in the same frequency range.

4. LIMITATIONS AND ASSUMPTIONS

The program may be used for values of ka up to 60. At high values of ka ($ka > 35$) the computational effort required can lead to unacceptably long calculation times and so an alternative, faster, approximate calculation procedure is used automatically. The transition region is smooth with typical differences in results from the exact and the approximate methods being less than a decibel at $ka = 35$ and this improves further with increasing ka.

The theory used for the method presented here was developed for sound radiation in the absence of flow. However, by a relatively simple transformation of variables, the equations can be adapted (see Section 5) to deal with the case of the duct immersed in a uniform flow parallel to the duct axis. However, when there is positive flow, as for an exhaust duct, the shedding of vorticity fluctuations from the trailing edge complicates matters considerably and extreme caution must be exercised in interpreting any result for positive flows with Mach numbers greater than about 0.3.

The prediction method assumes that evanescent or cut-off modes make no contribution.

The method does not deal with annular ducts. The method may also be used with accurate results for flanged ducts in the forward arc where θ is less than about 70 degrees to 80 degrees.

Documents
Document Sharing Hub
Full document details: ESDU 01015 A 2019
IHS Markit copyright material