ESDU 74025

Issued October 1974
With Amendments A and B
November 1992
Re-issued May 2011

Natural frequencies of box structures

Associated software: ESDUpac A7425

Endorsed by
The Royal Aeronautical Society

ESDU Copyright material. For current status contact ESDU.

Documents
Document Sharing Hub

ESDU DATA ITEMS

Data Items provide validated information in engineering design and analysis for use by, or under the supervision of, professionally qualified engineers. The data are founded on an evaluation of all the relevant information, both published and unpublished, and are invariably supported by original work of ESDU staff engineers or consultants. The whole process is subject to independent review for which crucial support is provided by industrial companies, government research laboratories, universities and others from around the world through the participation of some of their leading experts on ESDU Technical Committees. This process ensures that the results of much valuable work (theoretical, experimental and operational), which may not be widely available or in a readily usable form, can be communicated concisely and accurately to the engineering community.

We are constantly striving to develop new work and review data already issued. Any comments arising out of your use of our data, or any suggestions for new topics or information that might lead to improvements, will help us to provide a better service.

THE PREPARATION OF THIS DATA ITEM

The work on this particular Data Item was monitored and guided by the Acoustic Fatigue Panel. This Committee first met in 1966 and now has the following membership:

Chairman		
Prof. B.L. Clarkson	—	Institute of Sound and Vibration Research, University of Southampton
Vice-Chairman		
Mr W.T. Kirkby	—	Royal Aircraft Establishment
Members		
Mr D.C.G. Eaton	—	British Aircraft Corporation Ltd, Filton
Mr J.A. Hay	—	British Aircraft Corporation Ltd, Weybridge
Mr M.J.T. Smith	—	Rolls-Royce (1971) Ltd, Derby
Mr N.A. Townsend	—	Hawker Siddeley Aviation Ltd, Hatfield.

The work on this Item was carried out under the supervision of Mr A.G.R. Thomson, Executive – Environmental Projects. The member of staff who undertook the technical work involved in the initial assessment of the available information and the construction and subsequent development of the Item was

Mr R.F. Lambert — Senior Engineer.

Since 1970, Governments of NATO Nations have provided financial assistance through the Advisory Group for Aerospace Research and Development (AGARD) for revising and extending the data provided in Data Items on acoustic fatigue that were first issued by ESDU in 1966 and 1967. The Acoustic Fatigue Working Group (under the Chairmanship of Mr A.H. Hall, National Aeronautical Establishment, Canada) of the AGARD Structures and Materials Panel initiated and directed this additional work and appointed National Coordinators (see below) for each of the sponsoring Nations to provide basic data and to review AGARDographs as prepared by ESDU staff, monitored and guided by the Acoustic Fatigue Panel.

(*Continued on inside back cover*)

ESDU Copyright material. For current status contact ESDU.

Documents
Document Sharing Hub

Full document details: ESDU 74025 B-R1 2011

NATURAL FREQUENCIES OF BOX STRUCTURES

CONTENTS

		Page
1.	NOTATION	1
2.	INTRODUCTION	2
3.	NOTES	3
4.	COMPARISON WITH MEASURED DATA	4
5.	DERIVATION	5
6.	EXAMPLE	5
	FIGURES 1 TO 9	8 TO 16
APPENDIX A –	COMPUTER PROGRAM FOR THE ESTIMATION OF THE NATURAL FREQUENCIES OF BOX STRUCTURES	17
A.1	GENERAL	17
A.2	DATA INPUT	17
A.2.1	General	17
A.2.2	Box structure material properties	17
A.2.3	Box structure overall geometry	18
A.2.4	Top skin plate thicknesses*	18
A.2.5	Bottom skin plate thicknesses*	18
A.2.6	Rib thicknesses*	18
A.2.7	Spar thicknesses	19
A.2.8	Mode case data	20
A.3	DATA OUTPUT	20
A.4	EXAMPLE INPUT/OUTPUT	20

ESDU Copyright material. For current status contact ESDU.

Documents
Document Sharing Hub
Full document details: ESDU 74025 B-R1 2011

NATURAL FREQUENCIES OF BOX STRUCTURES

1. NOTATION

a	length of longer side of skin plate	m	in
b	length of shorter side of skin plate	m	in
d	depth of box	m	in
E	Young's modulus	N/m^2	lbf/in^2
f	natural frequency	Hz	Hz
K	frequency parameter	m/s	in/s
m	mode number in x – direction		
n	mode number in y – direction		
q	mode number in z – direction		
t	plate thickness	m	in
V	velocity parameter for plate material*		
x, y, z	rectangular system of Cartesian coordinates defined in Sketch 1.1		
ρ	density of plate material	kg/m^3	†
ν	Poisson's ratio of plate material		

Suffixes

b	bottom cover plate
c	cover plate in xy – plane (*e.g.* skin)
r	internal plate in xz – plane (*e.g.* rib)
s	internal plate in yz – plane (*e.g.* spar web or frame)
t	top cover plate
1, 2	rib or spar number (see Figure A1)

* The velocity parameter is defined in SI units by $V = (E/\rho)^{1/2}/5080$ or in British units by $V = (E/\rho)^{1/2}/200\,000$. It is approximately unity for all common structural metallic materials.

† A density value expressed in British units as pounds per cubic inch has to be divided by 386.4 before being used to calculate parameters defined in this Section. (A force of 1 lbf acting on a mass of 1 lb produces an acceleration of 386.4 in/s^2.) For example, if the material density is 0.097 lb/in^3, the value used in the calculation of V should be 2.51×10^{-4} lb s^2/in^4.

Issued October 1974
With Amendments A and B, November 1992 – 24 pages
Re-issued May 2011 – 24 pages

ESDU Copyright material. For current status contact ESDU.
Documents
Document Sharing Hub
Full document details: ESDU 74025 B-R1 2011

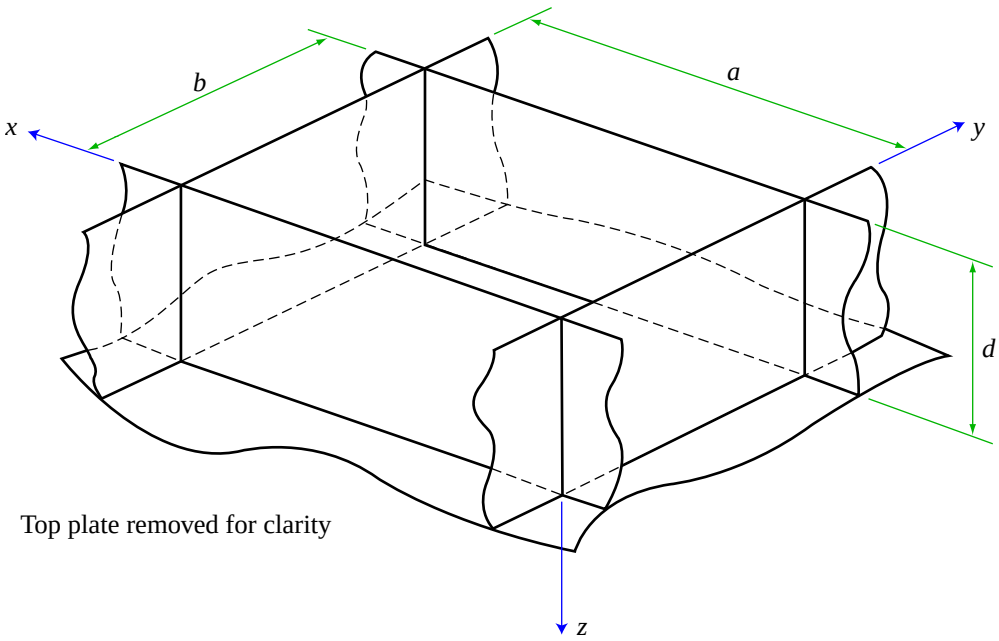

Sketch 1.1

It is conventional, in aircraft engineering, to refer to plates of a box structure as skins, ribs and spars as above. This nomenclature is used in this Data Item for convenience.

Both SI and British units are quoted but any coherent system of units may be used.

2. INTRODUCTION

Many aircraft have structures in box form in regions of dynamic loading. This loading may be due to jet noise, boundary layer noise, buffet or other types of loading action. This Data Item is primarily intended for use with box structures excited by jet noise but is applicable to other types of dynamic loading.

Examples of box structures are typically found in jet aircraft in fin and tailplane structures. In jet aircraft, in the usual configurations, these structures lie close to the jet efflux, a region of intense acoustic loading. Fin and tailplane structures are usually built-up from pairs of skin panels separated by ribs and spar webs. In terms of dynamic response the ribs and spars provide a mechanical coupling between opposite skin plates. Practical structures have cut-outs in ribs and spars which increase the complexity of the analysis and thereby make exact solution beyond the scope of a data sheet presentation. However, a simple idealised structure leads to a qualitative understanding of the major response characteristics.

In the simple analysis presented in this Item it is implicit that the vibrations of the skin and internal supporting structure are coupled. In practice, it is unlikely that skin and internal plates are completely coupled in any mode of vibration. The nature of the response is dependent on both the nature of the exciting noise field and structural relationships.

To assess the effectiveness of a noise source in exciting a particular mode of vibration, the exciting force phase relationship over the structure must be considered. When the exciting force varies in a random manner, as does jet noise, the phase relationships will not be constant with time. In such cases it is usual to consider the pressure correlation which indicates the average phase relationship between pressures at two points over a period of time. Tests on jet aircraft structures have shown that, within the frequency range of interest

ESDU Copyright material. For current status contact ESDU.
Documents
Document Sharing Hub
Full document details: ESDU 74025 B-R1 2011

for typical structures, the pressure correlation is likely to be high and positive (pressure in-phase) over a number of skin panels. This tends to favour the vibration modes where adjacent skin panels are in-phase and there is relatively little distortion of ribs (or spars), rather than the modes which occur when skin and rib plates are coupled so that adjacent skin panels are out of phase and there is considered rib distortion.

For skin and rib vibrations to be coupled, such that the plates vibrate together with one frequency and with comparable amplitudes, their stiffnesses and mass distribution must be closely related. Representing a symmetric box, with equal top and bottom skin thicknesses, by a simple two-dimensional beam model suggests that when the individual skin and rib frequencies are equal the box fundamental mode is one in which skin and rib plates vibrate together in a simply-supported type of mode. This condition occurs when $(d/b)(t_c/t_r)^{½}$ is unity. In box structures where rib stiffness is greater than skin stiffness, the lowest frequency mode is that in which individual skin plates vibrate in their fixed-edge mode.

Coupled plate vibrations are less likely to occur in box arrays with non-uniformities since they induce a decoupling effect. Likely non-uniformities are unequal rib pitches or differences between stiffnesses of the top and bottom skin-stiffener combinations.

It is evident from the preceding discussion that fully coupled skin and rib vibration modes occur only in certain conditions of the noise field and structure geometry. If, when estimating frequencies of vibration as a first step towards the calculation of fatigue life in an acoustic environment, the coupled mode conditions are not satisfied it is better to consider the individual elements (skin plates and rib plates) separately. Estimates of plate natural frequencies may be obtained from ESDU Nos 72003, 72016, 75030 and 87002.

3. NOTES

This Item gives the natural frequencies of box structures that are rectangular in section and initially unstressed. The data presented are based on the theory given in Derivation 4 where a Rayleigh analysis, which uses an assumed sinusoidal mode shape, is applied to a nine-cell box structure. The theoretical analysis allows for rotation at plate joints but the joints are fixed against translation. All angles at the joints between skin and ribs, or spars, are assumed to remain at 90° throughout the vibratory motion. Within the limits of the simple analysis it is impossible to apply the 90° joint restraint to rib-to-spar joints (see Sketch 3.1); however, this joint is considered to be the least important for the frequency calculation. All exterior edges of the nine-cell box structure are assumed to be simply-supported (see Sketch 3.2).

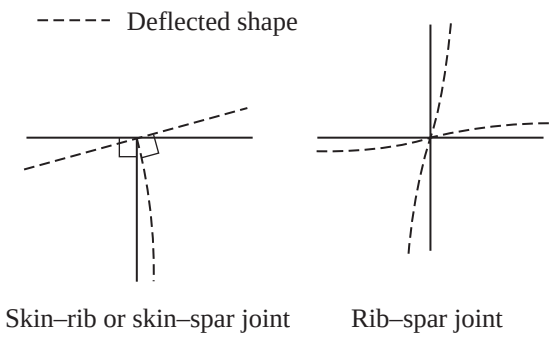

Sketch 3.1

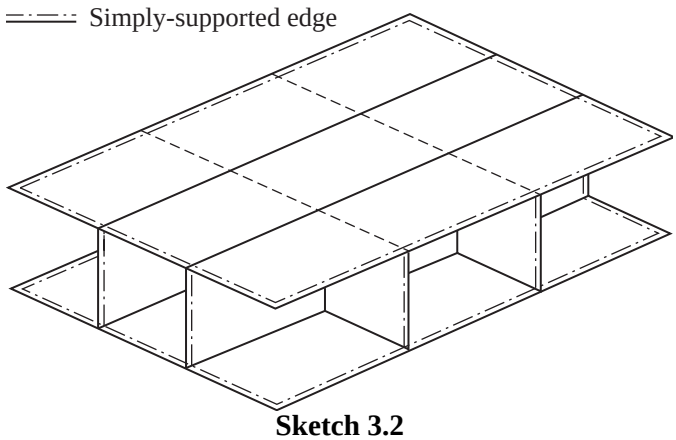

Sketch 3.2

The graphical presentation of data is restricted to the lowest natural frequency (*i.e.* $n = m = q = 1$) for a box within an array of identical boxes having equal upper and lower skin thicknesses. The deflected shape of this mode, through the centre of the box, in both the *xz*-plane is shown in Sketch 3.3. The computer program,

ESDU Copyright material. For current status contact ESDU.
Documents
Document Sharing Hub
Full document details: ESDU 74025 B-R1 2011

in Appendix A, can be used to obtain frequencies of higher modes as well as those for boxes in an array having skin plates of any aspect ratio and with any or all of the plates of different thickness.

The lowest natural frequency is intended for use in calculating the stress response of box structure panels under the action of acoustic loading. This frequency is given by

$$f = VK\frac{t_c}{b^2}.$$

In Figures 1-8, values of K are presented as carpets in terms of the plate parameters b/a and b/d. Carpets are given for a range of values of t_c/t_r for each of four values of t_s/t_c.

In deriving the curves the value of σ was assumed to be 0.3. This value gives sufficiently accurate frequencies for all common structural metallic materials. The mode number is taken to be the number of half waves in the relevant plate direction.

This Data Item provides a means of assisting the effects on frequency of changes in geometric parameter; however, the predicted frequencies can be only approximate because of the assumptions made in the analysis. A comparison of estimated and measured frequencies is provided (see Section 4).

This Item may be used to obtain a first approximation to the natural frequencies of box structures having skins with stiffeners between the ribs, or spars. In this case an equivalent skin thickness should be used. It is recommended that this equivalent skin thickness should be that necessary to give the same frequency as that of the stiffened plate. The equivalent skin thickness is dependent on the mode of vibration of the stiffened plate. For a stiffened plate vibrating in a fundamental type mode, the frequency may be obtained from ESDU 72003 (conventionally stiffened panel) or ESDU 73013 (integrally machined panel); then using ESDU 75030, the thickness of the flat unstiffened panel that has the aspect ratio and natural frequency of the stiffened panel can be obtained. The calculation and use of effective skin thicknesses in estimating frequency for a box with stiffened skin is shown in the example in Section 6.2.

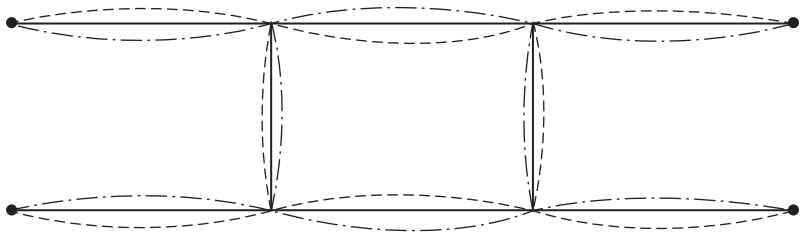

Sketch 3.3

4. COMPARISON WITH MEASURED DATA

Figure 9 shows a comparison of calculated natural frequencies and measured frequencies of rectangular box structures. All boxes considered are idealised structures, *i.e.* without cut-outs or stiffeners between ribs or spars. Some of these data are from structures excited by random acoustic loading where the modes of vibration were not identified. In such cases the measured frequency of the maximum root mean square strain has been compared with the calculated lowest natural frequency.

The fundamental vibratory mode of a plate is the mode most sensitive to edge support conditions. As the deflected shape used in the analysis assumes simply-supported edges the predicted frequency for the

ESDU Copyright material. For current status contact ESDU.
Documents
Document Sharing Hub
Full document details: ESDU 74025 B-R1 2011

(1, 1, 1) mode is generally lower than the measured value.

5. DERIVATION

The derivation lists selected sources that have assisted in the preparation of this Item.

1. CLARKSON, B.L. FORD, R.D. — The response of a typical aircraft structure to jet noise. *J.R. aeronaut. Soc.*, Vol. 66, No. 613, pp 31-40, January 1962.
2. CLARKSON, B.L. — The design of structures to resist jet noise fatigue. *J.R. aeronaut. Soc.*, Vol. 66, No. 622, pp 603-616, October 1962.
3. BARRETT, G.W. — Fatigue and response testing of riveted joints in panels subjected to wide band loading in the B.A.C. (Weybridge) high intensity noise facility. British Aircraft Corporation Ltd, Acoustics Lab. Rep. No. 048 Part 2. Work under Ministry of Technology Contract KS/1/0504/ CB.43A2, November 1970.
4. RUDDER, F.F. — Acoustic fatigue of aircraft structural component assemblies. Air Force Flight Dynamics Lab., Ohio, tech. Rep. AFFDL-TR71-107, February 1972.
5. ABRAHAMSON, A.L. — Structural response to aero-acoustic noise. British Aircraft Corporation Ltd, Acoustics Lab. Rep. No. 364. Work under Ministry of Technology, Contract KS/1/0632/CB.43A2, 1973.
6. CLARKSON, B.L. — Estimates of the response of box type structures to acoustic loading. *Paper 10 of Proceedings of symposium on acoustic fatigue, Toulouse, September 1972*. AGARD–CP–113, May 1973.
7. THOMSON, A.G.R. IV, LAMBERT, R.F. — Acoustic fatigue design data, Part IV. AGARD–AG–162–PART 1974.

6. EXAMPLE

6.1 It is required to estimate the lowest natural frequency of an aluminium alloy box structure made up from identical cells having top and bottom skin plates of equal thickness, with the following dimensions and physical properties:

$a = 600$ mm, $b = 200$ mm, $d = 150$ mm,

$t_c = 0.8$ mm $t_r = 0.8$ mm, $t_s = 1.2$ mm

$E = 70\,000$ MN/m^2, $\rho = 2770$ kg/m^3, $\nu = 0.3$.

Firstly

$$\frac{b}{a} = \frac{200}{600} = 0.33,$$

$$\frac{b}{d} = \frac{200}{150} = 1.33,$$

ESDU Copyright material. For current status contact ESDU.

Documents Document Sharing Hub

Full document details: ESDU 74025 B-R1 2011

$$\frac{t_c}{t_r} = \frac{0.8}{0.8} = 1.0\,,$$

and $$\frac{t_s}{t_c} = \frac{1.2}{0.8} = 1.5\,.$$

From Figure 4 $$K = 3.0 \times 10^3 \text{ m/s for } \frac{t_s}{t_c} = 1.0\,,$$

and from Figure 6 $$K = 3.22 \times 10^3 \text{ m/s for } \frac{t_s}{t_c} = 2.0\,,$$

By linear interpolation for $\frac{t_s}{t_c} = 1.5, K = 3.11 \times 10^3$ m/s.

Also $$V = \sqrt{\frac{70\,000 \times 10^6}{2770}} \times \frac{1}{5080} = 0.99\,.$$

Hence $$f = 0.99 \times 3.11 \times 10^3 \times \frac{0.8 \times 10^{-3}}{(200 \times 10^{-3})^2}$$

$$= 61.6 \text{ Hz.}$$

The example illustrates that within the limits of accuracy of the frequency prediction, the calculation of V is unnecessary for boxes constructed from metals commonly used in structures; its value may be assumed to be 1.0.

6.2 If conventional Z-section stringers are riveted to the top and bottom skin plates parallel to the box sides of length 200 mm, at a uniform pitch of 150 mm, find the new box frequency using an effective skin thickness.

The stringer geometric and physical properties required for use with ESDU 72003 are as follows:

St Venant constant of uniform torsion, J_{st}, equals 11.7×10^{-2} m^4,
polar moment of inertia of the stringer cross-section about a point on the skin directly beneath the stringer shear centre, I_{st}, equals 11.0×10^{-9} m^4,
warping constant of the stringer cross section with respect to the point on the skin directly beneath the stringer shear centre, Γ_{st}, equals 4.93×10^{-13} m^6.

Young's modulus, $E_{st} = 70\,000$ MN/m^2,

shear modulus, $G_{st} = 27\,000$ MN/m^2

and density $\rho_{st} = 2770$ kg/m^3.

The flexural rigidity per unit width of the skin plate is given by

$$\frac{Et_c^3}{12(1-\nu^2)} = \frac{70\,000 \times 10^6 \times (0.8 \times 10^{-3})^3}{12(1-0.3^2)} = 3.28 \text{ Nm.}$$

ESDU Copyright material. For current status contact ESDU.

Documents
Document Sharing Hub

Full document details: ESDU 74025 B-R1 2011