ESDU 76014

Issued June 1976
With Amendments A and B
June 1993
Re-issued February 2013

Estimation of endurance and construction of constant amplitude *S – N* curves from related data corrected for notch and mean stress effects

Endorsed by
The Royal Aeronautical Society

ESDU Copyright material. For current status contact ESDU.

Documents
Document Sharing Hub

Full document details: ESDU 76014 B-R1 2013

ESDU DATA ITEMS

Data Items provide validated information in engineering design and analysis for use by, or under the supervision of, professionally qualified engineers. The data are founded on an evaluation of all the relevant information, both published and unpublished, and are invariably supported by original work of ESDU staff engineers or consultants. The whole process is subject to independent review for which crucial support is provided by industrial companies, government research laboratories, universities and others from around the world through the participation of some of their leading experts on ESDU Technical Committees. This process ensures that the results of much valuable work (theoretical, experimental and operational), which may not be widely available or in a readily usable form, can be communicated concisely and accurately to the engineering community.

We are constantly striving to develop new work and review data already issued. Any comments arising out of your use of our data, or any suggestions for new topics or information that might lead to improvements, will help us to provide a better service.

THE PREPARATION OF THIS DATA ITEM

The work on this particular Data Item was monitored and guided by the Fatigue Committee. This Committee first met in 1955 and now has the following membership:

Chairman

Dr R.N. Wilson	—	Royal Aerospace Establishment, Farnborough

Members

Mr D. Brazington	—	Dowty Aerospace Ltd, Gloucester
Mr K.E. Cheverton	—	Independent
Mr D. Crouch	—	British Aerospace Dynamics
Dr M.S.G. Cullimore	—	Independent
Dr P.R. Edwards	—	P.P. Data Ltd
Dr J.M. Finney*	—	Aeronautical Research Laboratories, Melbourne, Australia
Mr J. O'Hara	—	British Aerospace (Military Aircraft) Ltd
Dr M. Miller*	—	Boeing Commercial Airplane Co., Seattle, USA
Mr D. Painter	—	Westland Helicopters Ltd
Prof. Dr L. Schwarmann	—	Deutsche Airbus, Germany
Mr A.R. Simpson	—	British Aerospace (Commercial Aircraft) Ltd
Mr T. Swift*	—	Federal Aviation Administration, USA
Dr R.J. Wanhill*	—	National Aerospace Laboratory, NLR, The Netherlands.

* Corresponding Member

The construction and subsequent development of the Data Item was undertaken by

Mr M.E. Grayley	—	Strength Analysis Group Head.

ESDU Copyright material. For current status contact ESDU.

Documents
Document Sharing Hub

ESTIMATION OF ENDURANCE AND CONSTRUCTION OF CONSTANT AMPLITUDE *S* – *N* CURVES FROM RELATED DATA CORRECTED FOR NOTCH AND MEAN STRESS EFFECTS

CONTENTS

		Page
1.	INTRODUCTION	1
2.	NOTATION	1
3.	GENERAL CONSIDERATIONS	2
4.	CALCULATION PROCEDURE	3
4.1	Calculation of Actual Stresses	3
4.1.1	Calculation of actual stresses acting at a stress raiser using the elastic/perfectly plastic stress-strain curve	4
4.1.2	Calculation of actual stress acting at a stress raiser using the plastic stress concentration factor	5
4.2	Correction for Mean Stress Effect	7
4.3	Construction of the *S* – *N* Curve	8
4.4	Correction for Notch Size Effects	8
4.5	Calculation of Endurance or Construction of Required *S* – *N* Curve(s)	8
5.	DERIVATION	9
6.	EXAMPLE	9
6.1	Solution Using Elastic/Perfectly Plastic Stress-Strain Curve	9
6.2	Solution Using Plastic Stress Concentration Factors	11
6.3	Derivation of Curve for $S_a = S_m$ Condition	12
APPENDIX A	GENERALISATION OF SMOOTH CONTINUOUS STRESS-STRAIN CURVES	17
A1.	INTRODUCTION	17
A2.	NOTATION	17
A3.	GENERALISED EQUATIONS FOR STRESS-STRAIN CURVES	17
A4.	DETERMINATION OF m AND f_n	18
A5.	DERIVATION AND REFERENCES	19
A5.1	Derivation	19
A5.2	References	19
A6.	EXAMPLE	19

ESDU Copyright material. For current status contact ESDU.

Documents
Document Sharing Hub

Full document details: ESDU 76014 B-R1 2013

ESTIMATION OF ENDURANCE AND CONSTRUCTION OF CONSTANT AMPLITUDE $S-N$ CURVES FROM RELATED DATA CORRECTED FOR NOTCH AND MEAN STRESS EFFECTS

1. INTRODUCTION

This Item describes methods for constructing constant amplitude $S-N$ curves for assessing the fatigue endurance of a component at a stress raiser. Generally, constant amplitude experimental data exactly pertinent to the particular feature under design are not available. This Item describes methods whereby the most relevant experimental data available may be corrected by a series of logical steps to obtain the endurance. Alternatively the method can be used to construct any desired $S-N$ curve or a set of curves (for example, a set of curves for a range of mean stress values). In addition to using constructed curves to estimate the endurance under constant amplitude loading, the curves may be used for determining the damage increment for cumulative damage sums. In these cases it is recommended that ESDU 95006 "Fatigue life estimation under variable amplitude loading using cumulative damage calculations" should be consulted.

2. NOTATION

c_n	0.n per cent proof stress in compression	N/m^2	lbf/in^2
E	modulus of elasticity of material	N/m^2	lbf/in^2
E_t	tangent modulus of material	N/m^2	lbf/in^2
e	strain at notch root		
f	stress at notch root	N/m^2	lbf/in^2
f_{max}, f_{min}	maximum and minimum local stresses at notch root	N/m^2	lbf/in^2
f_n	material reference stress at which $E_t = ½E$ (see Appendix A)	N/m^2	lbf/in^2
f_t	tensile strength	N/m^2	lbf/in^2
K_e	plastic strain concentration factor		
K_s	plastic stress concentration factor		
K_t	elastic stress concentration factor		
m	material characteristic (see Appendix A)		
m'	index characterising shape of $R-M$ diagram (see Section 4.2)		
N	endurance		
r	local radius in region of initiation of fatigue crack in notch	m	in

ESDU Copyright material. For current status contact ESDU.
Documents
Document Sharing Hub
Full document details: ESDU 76014 B-R1 2013

S_a	alternating stress	N/m^2	lbf/in^2
S_{am}	alternating stress at a prescribed mean stress	N/m^2	lbf/in^2
$\bar{S}_{am}$	alternating stress at a prescribed mean stress for plain unnotched material	N/m^2	lbf/in^2
S_{a0}	alternating stress at zero mean stress	N/m^2	lbf/in^2
$\bar{S}_{a0}$	alternating stress at zero mean stress for plain unnotched material	N/m^2	lbf/in^2
S_m	mean stress	N/m^2	lbf/in^2
S_{max}	maximum stress at a concentration given by simple elastic theory (see Equations (4.14), (4.17), (4.20) and (4.21))	N/m^2	lbf/in^2
S_{max}	$S_{max} - S_R$	N/m^2	lbf/in^2
S_R	stress range at a stress concentration given by simple elastic theory	N/m^2	lbf/in^2
t_n	0.*n* per cent proof stress in tension	N/m^2	lbf/in^2

Additional Suffixes

act	actual value at notch root
C	compressive value
d	relates to feature under design
s	relates to test specimens
T	tensile value

Sign Convention

Tensile stresses are positive.

Both SI and British units are quoted but any coherent system of units may be used.

3. GENERAL CONSIDERATIONS

In the selection of the test data most nearly relevant to the component or feature under design several major points should be noted. First, it is not normally possible to correct, with an acceptable degree of confidence, test data on one material for application to a different material. It is therefore necessary that some body of data on the material of which the component is to be manufactured should be available. Secondly, environmental and surface condition factors are usually particular to a material. It is therefore assumed that, in cases where these factors significantly affect the fatigue strength, some data for providing an estimate of their influence on the fatigue strength are available.

ESDU Copyright material. For current status contact ESDU.

Documents
Document Sharing Hub

Full document details: ESDU 76014 B-R1 2013

Assuming that test data that meet the points noted in the above paragraph are available, the possible differences between the test specimen and the conditions under which it was tested and the stress-raising feature of the component under design and its service conditions can be listed as follows:

(a) the ranges of loads experienced,

(b) the stress concentrations acting and

(c) the absolute size in the region of the initiation of the fatigue crack.

The following sections describe methods that account for these differences.

4. CALCULATION PROCEDURE

The general calculation procedure can be broken down into five distinct steps. In practice it may not be necessary to perform all of the steps if, in some respects, the test data relate to the same conditions as the required data.

(a) Determination of the actual stress cycle, alternating and mean values, occurring at the fatigue crack nucleation point in the test specimens.

(b) Correction of the various actual stress levels, calculated in (a), to a single selected mean stress value (usually zero mean stress).

(c) Construction of an $S-N$ curve through the data at the chosen mean stress value.

(d) Correction of the $S-N$ curve for test specimen/component relative size effect.

(e) Calculation of component actual stress cycle at fatigue sensitive locations. Then, either correction to the mean stress value chosen in (b) and selection of the associated endurance from the $S-N$ curve constructed in (d), or construction, from the $S-N$ curve of (d), of a family of curves for the mean load/alternating load combination required.

4.1 Calculation of Actual Stresses

In the most elementary cases the actual stresses are simply the product of the nominal stress and the appropriate stress concentration factor. However, in the majority of practical cases the stress level reached will be high enough to cause local yielding at the notch root. When this occurs the actual stress is a function of the form of the material stress-strain curve and the plastic stress concentration factor.

In this Item two methods are described for accounting for this effect. The first idealises the stress-strain curve to be elastic/perfectly plastic as shown in Sketch 4.1. This obviates the requirement to consider plastic stress concentration factors. The second uses commonly available material proof stress values to estimate the form of the material stress-strain curve. These values are then used with the Neuber equation for plastic stress concentration factors, which states that

$$K_t^2 = K_e \times K_s, \tag{4.1}$$

to estimate the actual notch stresses. In general the latter method is to be preferred and it becomes necessary to use it when yielding both in tension and compression occurs. However, the first, simple, method may prove satisfactory in cases where m (see Appendix A) is large and the elastic/perfectly plastic stress-strain

ESDU Copyright material. For current status contact ESDU.
Documents
Document Sharing Hub
Full document details: ESDU 76014 B-R1 2013

curve is a reasonable approximation to the true curve. The second method is only applicable to materials that exhibit a smooth continuous stress-strain curve, for example, aluminium or titanium alloys. For materials such as mild steels the elastic/perfectly plastic stress-strain curve based on the lower yield stress provides a better estimate of the notch stresses. The two methods are described in the following sections and an example using each method is given in Section 6.

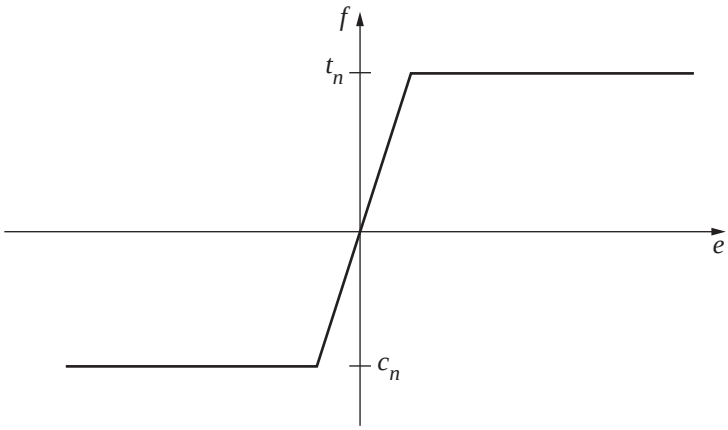

Sketch 4.1

4.1.1 Calculation of actual stresses acting at a stress raiser using the elastic/perfectly plastic stress-strain curve

When employing the elastic/perfectly plastic stress-strain curve it is usual to assume that yielding occurs at the 0.2 per cent proof stress of the material (that is, t_2 and c_2; note that in general $t_2 \neq c_2$). Four possible situations can exist at the notch with this assumption and they are set out below together with the associated equations for the actual alternating and mean stresses.

(i) No yielding

$$S_{a\ act} = K_t S_a \tag{4.2}$$

and

$$S_{m\ act} = K_t S_m . \tag{4.3}$$

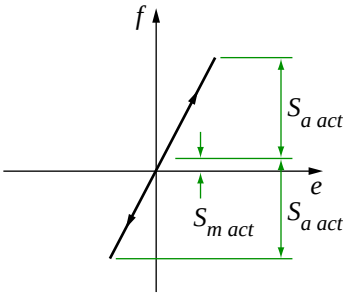

ESDU Copyright material. For current status contact ESDU.
Documents
Document Sharing Hub
Full document details: ESDU 76014 B-R1 2013

(ii) Tensile yielding only

$$S_{a\ act} = K_t S_a \tag{4.4}$$

and

$$S_{m\ act} = t_n - K_t S_a\,. \tag{4.5}$$

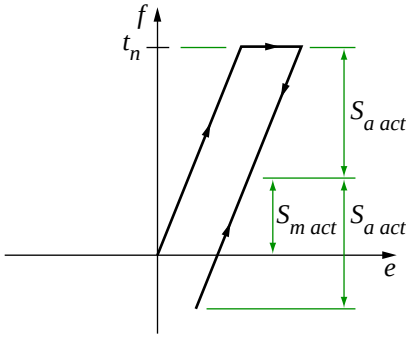

(iii) Compressive yielding only

$$S_{a\ act} = K_t S_a \tag{4.6}$$

and

$$S_{m\ act} = c_n + K_t S_a\,. \tag{4.7}$$

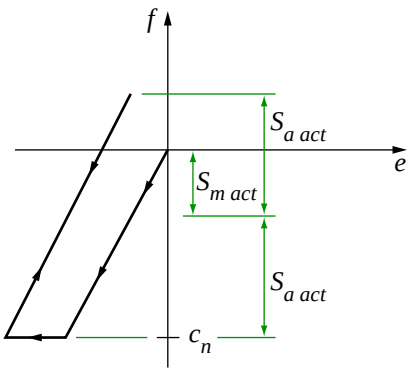

(iv) Tensile and compressive yielding

$$S_{a\ act} = (t_n - c_n)/2 \tag{4.8}$$

and

$$S_{m\ act} = (t_n + c_n)/2\,. \tag{4.9}$$

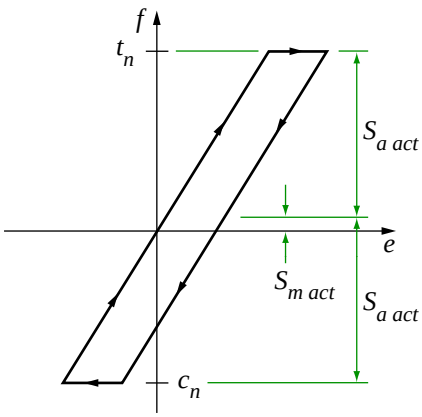

Case (iv) above illustrates the extreme case where, as Equations (4.8) and (4.9) show, $S_{a\ act}$ and $S_{m\ act}$ are fixed quantities. In practice this will not be so and if the situation of case (iv) is likely to occur it is recommended that the method described in Section 4.1.2 be used.

4.1.2 Calculation of actual stress acting at a stress raiser using the plastic stress concentration factor

Appendix A of this Item describes methods whereby the shape of a smooth continuous stress-strain curve may be described by the modulus of elasticity E, a reference stress f_n and a characteristic index m. (In general $f_{nC} \neq f_{nT}$ and $m_C \neq m_T$.) These have been used in conjunction with the Neuber equation for a

ESDU Copyright material. For current status contact ESDU.
Documents
Document Sharing Hub
Full document details: ESDU 76014 B-R1 2013

plastic stress concentration to produce Figure 2. The figure plots the actual stress reached divided by f_n against the theoretical elastic stress divided by f_n for values of m. Using Figure 2 in the calculation of $S_{a\ act}$ and $S_{m\ act}$ results in four possible situations which are set out below together with the associated equations.

(i) No yielding

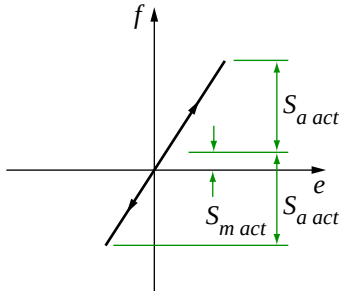

$$S_{a\ act} = K_t S_a \tag{4.10}$$

and

$$S_{m\ act} = K_t S_m . \tag{4.11}$$

(ii) Tensile yielding only

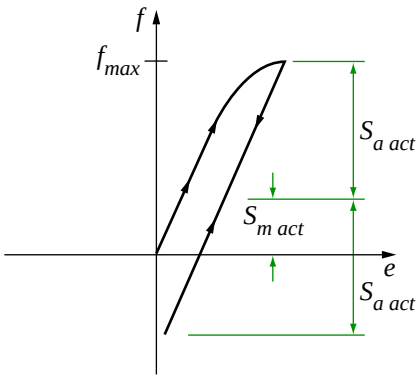

$$S_{a\ act} = K_t S_a \tag{4.12}$$

and

$$S_{m\ act} = f_{max} - K_t S_a , \tag{4.13}$$

where f_{max} is taken from Figure 2 with

$$\left.\begin{aligned} S_{max} &= K_t(S_a + S_m), \\ f_n &= f_{nT} \\ \text{and} \quad m &= m_T . \end{aligned}\right\} \tag{4.14}$$

(iii) Compressive yielding only

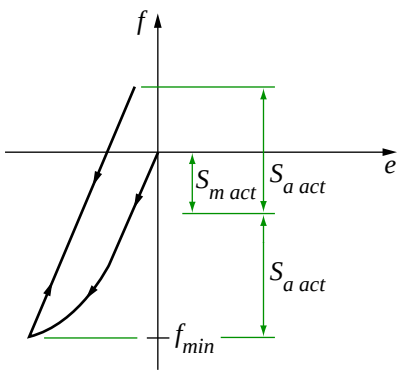

$$S_{a\ act} = K_t S_a \tag{4.15}$$

and

$$S_{m\ act} = f_{min} + K_t S_a , \tag{4.16}$$

where f_{min} is taken from Figure 2 with

$$\left.\begin{aligned} S_{max} &= K_t(-S_a + S_m), \\ f_n &= f_{nC} \\ \text{and} \quad m &= m_C . \end{aligned}\right\} \tag{4.17}$$

ESDU Copyright material. For current status contact ESDU.

Documents
Document Sharing Hub

Full document details: ESDU 76014 B-R1 2013