ESDU Copyright material. For current status contact ESDU.

ESDU 81007

Issued August 1981
Re-issued February 2013

Fatigue strength in bending of steel I-beams with welded attachments

Endorsed by
The Institution of Mechanical Engineers

Documents
Document Sharing Hub

Full document details: ESDU 81007-R1 2013

ESDU DATA ITEMS

Data Items provide validated information in engineering design and analysis for use by, or under the supervision of, professionally qualified engineers. The data are founded on an evaluation of all the relevant information, both published and unpublished, and are invariably supported by original work of ESDU staff engineers or consultants. The whole process is subject to independent review for which crucial support is provided by industrial companies, government research laboratories, universities and others from around the world through the participation of some of their leading experts on ESDU Technical Committees. This process ensures that the results of much valuable work (theoretical, experimental and operational), which may not be widely available or in a readily usable form, can be communicated concisely and accurately to the engineering community.

We are constantly striving to develop new work and review data already issued. Any comments arising out of your use of our data, or any suggestions for new topics or information that might lead to improvements, will help us to provide a better service.

THE PREPARATION OF THIS DATA ITEM

The work on this particular Data Item was monitored and guided by the Stress Analysis and Strength of Components Committee. This Committee first met in 1964 and now has the following membership:

Chairman		
Mr A.J. Batchelor	—	Imperial Chemical Industries Ltd
Vice-Chairman		
Mr J.V. Vint	—	N.E.I. Parsons Ltd
Members		
Mr H.L. Cox	—	Independent
Dr M.S.G. Cullimore	—	University of Bristol
Mr C.E. Day	—	Independent
Prof. J.P. Duncan*	—	University of British Columbia, Vancouver, Canada
Mr D. Duval	—	Foster Wheeler Power Products Ltd
Dr R.B. Heywood	—	A. Macklow-Smith Ltd
Dr L.C. Laming	—	Imperial College of Science and Technology
Mr D. McKinley	—	Lloyd's Register of Shipping
Dr R.M.G. Meek	—	National Engineering Laboratory
Dr J. Spence	—	University of Strathclyde
Dr C.E. Turner	—	Imperial College of Science and Technology.

* Corresponding Member

The construction and subsequent development of the Data Item was undertaken by

Mr R.P. Sharp	—	Senior Engineer.

The person with overall responsibility for the work in this subject area is Mr M.E. Grayley, Head of Strength Analysis Group.

The ESDU Stress and Strength Series is recognised as a valuable source of validated data and methods by the Institution of Mechanical Engineers and its Structural Technology and Materials Group is involved in continually reassessing the scope and focus of the content of this Series.

ESDU Copyright material. For current status contact ESDU.

Documents
Document Sharing Hub

FATIGUE STRENGTH IN BENDING OF STEEL I-BEAMS WITH WELDED ATTACHMENTS

CONTENTS

		Page
1.	NOTATION	1
2.	INTRODUCTORY NOTES	1
3.	BEAMS WITH COVER-PLATES	4
3.1	Effect of Cover-plate Geometry on Fatigue Strength	4
3.2	Effect of Welds at the Ends of Cover-plates on Fatigue Strength	5
3.3	Failures in the Compression Flange	5
4.	BEAMS WITH STIFFENING GUSSETS	5
4.1	Stiffeners Welded to the Tension Flange	5
4.2	Stiffeners not Welded to the Tension Flange	5
5.	COMPARISON OF DATA OF FIGURES 1 TO 4 WITH BS 5400	6
6.	DERIVATION	6
FIGURES 1 to 7		9 to 15
APPENDIX A	BS 5400 CLASSIFICATIONS RELATED TO THIS ITEM	16
A1.	RELATED FIGURES	16

ESDU Copyright material. For current status contact ESDU.

Documents
Document Sharing Hub
Full document details: ESDU 81007-R1 2013

FATIGUE STRENGTH IN BENDING OF STEEL I-BEAMS WITH WELDED ATTACHMENTS

1. NOTATION

N	endurance		
S_a	maximum nominal alternating principal stress (half range) in beam in critical regions at ends of attachments or weld runs (see Section 2 for different cases)	N/m^2	lbf/in^2

Both SI and British units are quoted.

2. INTRODUCTORY NOTES

This Item presents data on the fatigue strength in bending of structural steel I-beams with welded cover-plates or with stiffening gussets welded to the webs and to one or both flanges. The attachments were of similar composition to the beam materials and the types and configurations of attachments to which the data apply are illustrated in Sketches 2.1 and 2.2. The data were obtained from tests on rolled or welded beams of between 100 mm (4 in) depth by 75 mm (3 in) width and 400 mm (16 in) depth by 200 mm (8 in) width in the as-welded condition. The beams were tested in four point bending in the plane of the web.

In Figures 1 to 7 data are presented in terms of the nominal principal stress range, $2S_a$, in the beam in the critical regions at the ends of attachments or weld runs. These stresses were determined either by strain gauge analysis or by calculation using simple bending theory. For attachments falling within the constant moment region and for attachments welded to the tension flange outside the constant moment region, the fibre stress calculated using simple bending theory, was taken as the nominal principal stress. Where the critical region was positioned on the web of the beam and outside the constant moment region, shear stresses were taken into account when calculating the nominal principal stress. (When calculating the second moment of area the cover-plate was only taken into account where full length cover-plates existed.)

Provided that the welds are sound and free from major defects, the fatigue strength above 10^4 cycles of structural steel I-beams with attachments having undressed welds is independent of the properties of both plate and weld materials. The fatigue strength is independent of applied tensile mean stress within the range of mean stresses for which data were available (0 to 235 MN/m^2). This is because as-welded joints contain a system of localised residual stresses in the direction of stressing which result from the internal constraints developed during cooling of the weld and which are normally of the order of the material yield strength. Thus, the first few load cycles may cause local yielding in critical regions, such as the ends of weld runs in longitudinal welds and along the weld toe in transverse welds. The actual stress experienced in the critical regions will, thereafter, cycle between the material yield strength and the yield strength less the applied stress range irrespective of applied mean stress (except in cases of high compressive mean stress, see Section 3.3). Beams larger than those tested may be expected to exhibit fatigue lives at the lower end of the scatter band due to the full development of these residual stresses.

Mean lines and scatter bands that enclose 95 per cent of the data are provided on Figures 1 to 4. A comparison of the mean lines for the various joints covered by this Item is given in Figure 5. Mean lines and lower bounds of Figures 1 to 4 are compared with those given in BS 5400 for similar joint types, see Section 5 and Figures 6 and 7.

Issued August 1981
Re-issued February 2013

ESDU Copyright material. For current status contact ESDU.
Documents
Document Sharing Hub
Full document details: ESDU 81007-R1 2013

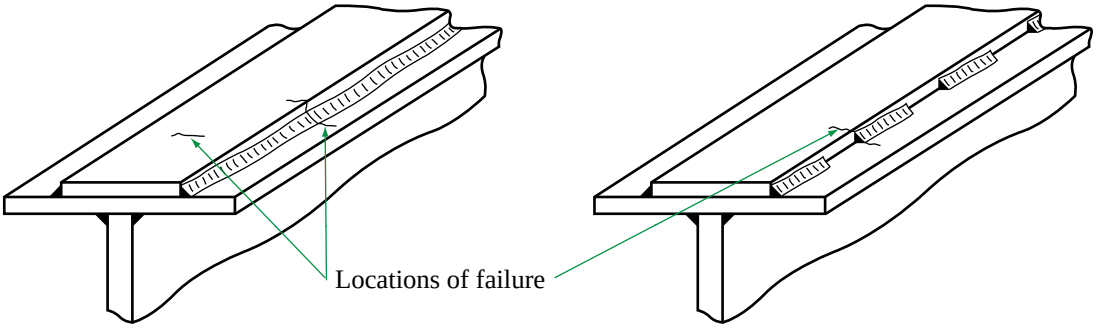

Type 1.
Attached with continuous welds

Type 2.
Attached with intermittent welds

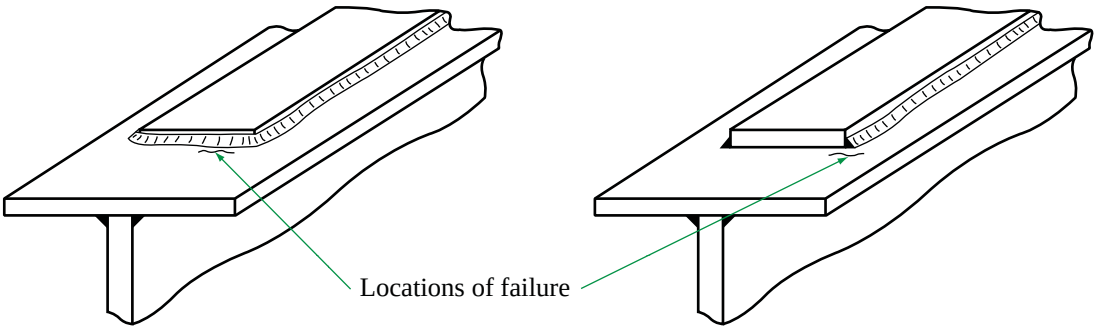

Type 3.
Narrower than the flange. Welded across end.

Type 4.
Narrower than the flange. Welded longitudinally only.

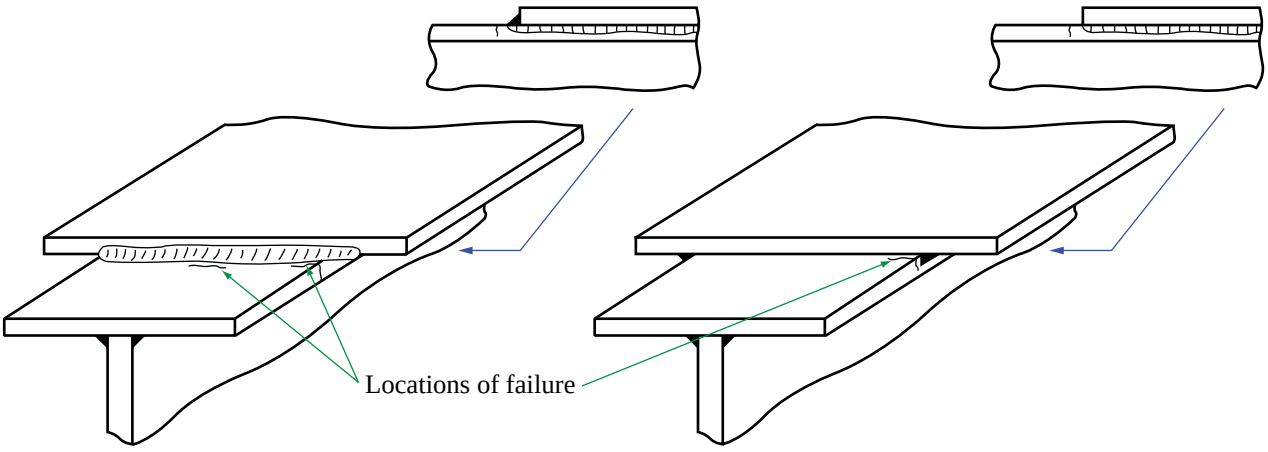

Type 5.
Wider than the flange. Welded across end

Type 4.
Wider than the flange. Welded longitudinally only.

Sketch 2.1 Cover-plate attachments (Types 1 to 6)

ESDU Copyright material. For current status contact ESDU.
Documents
Document Sharing Hub
Full document details: ESDU 81007-R1 2013

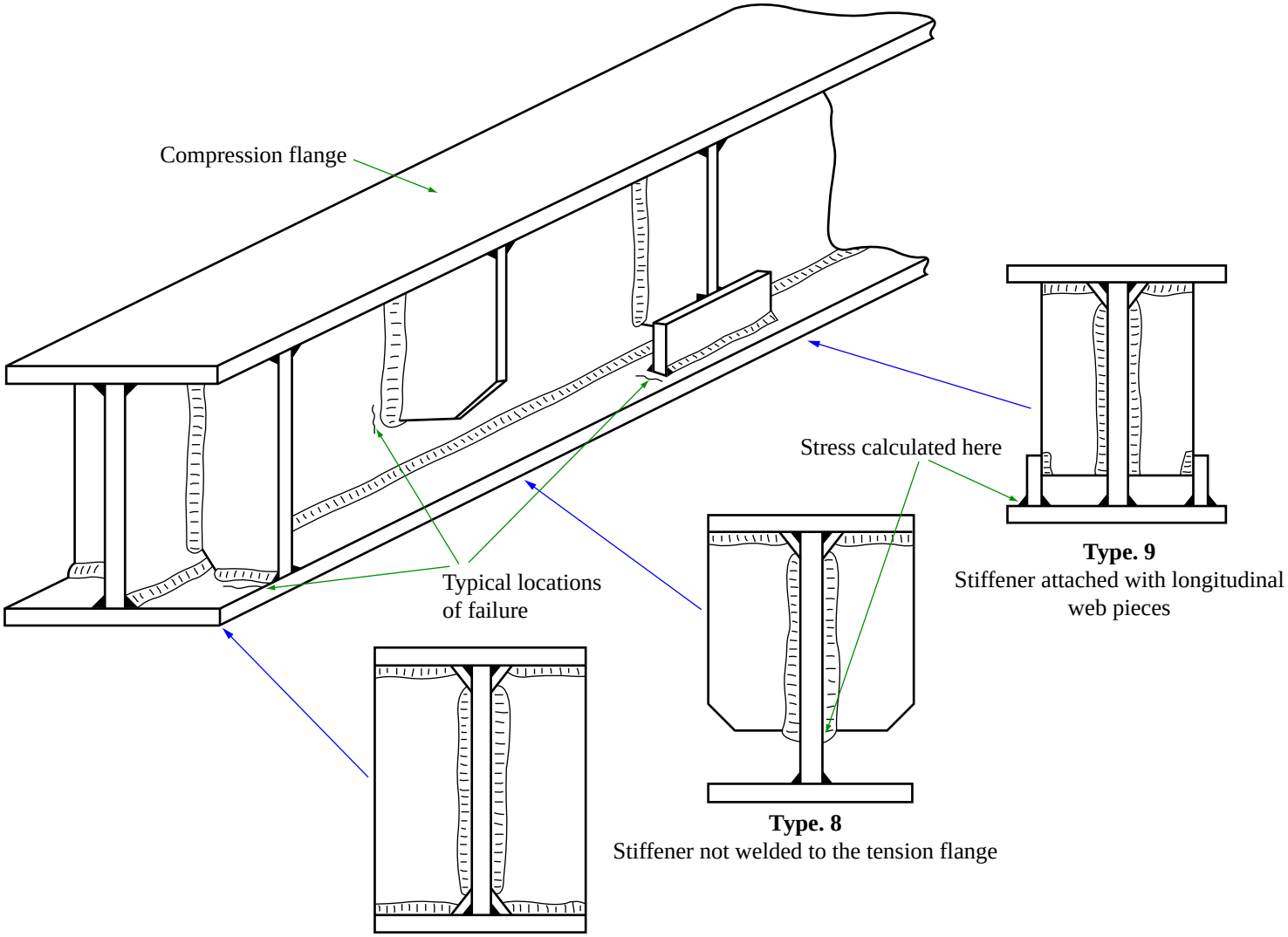

Sketch 2.2 Stiffener attachments (Types 7 to 9)
(see Section 4 for notes)

Full document details: ESDU 81007-R1 2013
ESDU Copyright material. For current status contact ESDU.
AVA Documents
Document Sharing Hub

3. BEAMS WITH COVER-PLATES

Data are presented in Figures 1 and 2 for beams with cover-plates welded symmetrically to their flanges. Figure 1 presents data for beams with full length cover-plates attached with either intermittent or continuous welds and compares these with the scatter bands of data for plain welded beams from ESDU 76032.

Figure 2 gives data for beams, either rolled or welded (built-up), with partial length cover-plates welded to each flange. The cover-plates were attached with either intermittent or continuous manual or automatic longitudinal welds and either with or without transverse end welds. No effects of welding method could be discerned from these data. These data are compared with those for plates in tension with longitudinal cover-plates, see ESDU 75016*. The partial length cover-plates were either wider or narrower than the flanges to which they were attached and had cover plate thickness to flange thickness ratios of between 0.75 and 2.0.

The available data, given in Figures 1 and 2, show no positive knee in the high cycle region and are represented by a straight line on a log endurance/log stress basis. The stress used to present the data is the stress range in the flange between the loading points and in Figure 2 is the stress at the toe of the weld where transverse end welds were used and at the end of the weld run where only longitudinal welds were used. In the case of beams with full length cover-plates the cover-plate was taken into account when calculating the second moment of area. Most tests relate to beams with cover-plates attached symmetrically to both flanges. The effects of cover-plate geometry on fatigue strength are described in Section 3.1. The effect of using cover-plates of different lengths on each flange is discussed in Section 3.3.

Failures in beams with full length cover-plates welded continuously start at a weld ripple, or at defects on the cover-plate surface, or at the ends of weld runs where intermittent welds are used. Failures occurred by the propagation of cracks across and through both cover-plates and flanges. Failures in beams with partial length cover-plates occurred from cracks initiated in the beam flange at, or close to, the ends of transverse welds or at the ends of longitudinal weld runs, which propagated across and through the flange of the beam and into the web. Failure locations are indicated in Sketch 2.1. In general, the crack propagates in a direction perpendicular to the direction of stressing.

3.1 Effect of Cover-plate Geometry on Fatigue Strength

No effect of cover-plate width on fatigue strength of beams with partial length cover-plates could be discerned from the collected data. None of the beams tested with cover-plates narrower than the flange had weld runs that interfered with the edges of the flange.

The data in Figure 2 are for beams with cover-plates of thickness between 0.75 and 2.0 times the flange thickness. No effect of cover-plate thickness could be discerned from these data. The majority of standards and codes of practice recommend that no cover-plate should be more than 1.5 times the flange thickness, although this restriction may be for reasons other than fatigue strength.

All the beams tested had cover-plates longer than 1.5 times the cover-plate width if transverse end welds were used and longer than three times the width if only longitudinal welds were used.

Data are included in Figure 2 for cover-plates having round, tapered, or re-entrant ends. These data do not disagree with those for square-ended cover-plates.

* ESDU 75016 “Fatigue strength of transverse fillet and cruciform butt welds in steels”.

ESDU Copyright material. For current status contact ESDU.

Documents
Document Sharing Hub

Full document details: ESDU 81007-R1 2013