ESDU Copyright material. For current status contact ESDU.

ESDU 81018

Issued August 1981
With Amendments A and B
December 1992
Re-issued December 2012

Natural frequencies of thick-walled isotropic circular-cylindrical shells
(shear diaphragm end conditions)

Associated software: ESDUpac A8118

Endorsed by
The Royal Aeronautical Society

Documents
Document Sharing Hub

ESDU DATA ITEMS

Data Items provide validated information in engineering design and analysis for use by, or under the supervision of, professionally qualified engineers. The data are founded on an evaluation of all the relevant information, both published and unpublished, and are invariably supported by original work of ESDU staff engineers or consultants. The whole process is subject to independent review for which crucial support is provided by industrial companies, government research laboratories, universities and others from around the world through the participation of some of their leading experts on ESDU Technical Committees. This process ensures that the results of much valuable work (theoretical, experimental and operational), which may not be widely available or in a readily usable form, can be communicated concisely and accurately to the engineering community.

We are constantly striving to develop new work and review data already issued. Any comments arising out of your use of our data, or any suggestions for new topics or information that might lead to improvements, will help us to provide a better service.

THE PREPARATION OF THIS DATA ITEM

The work on this particular Item was monitored and guided by the following Working Party:

Mr D.C.G. Eaton	—	European Space Research and Technology Centre, Domeinweg, The Netherlands
Prof. D.J. Johns	—	University of Technology, Loughborough
Dr M. Petyt	—	Institute of Sound and Vibration Research, University of Southampton
Dr J.J. Webster	—	University of Nottingham
Prof. W.H. Wittrick	—	University of Birmingham

which was appointed by the Vibration and Structural Dynamics Steering Group. The Vibration and Structural Dynamics Steering Group, which also approved the final draft, first met in 1976 and had the following membership:

Chairman		
Mr D.C.G. Eaton	—	European Space Research and Technology Centre, Domeinweg, The Netherlands
Members		
Mr T.V. Lawson	—	University of Bristol
Dr M.R. Smith	—	University of Newcastle-Upon-Tyne
Mr H.H.B.M. Thomas	—	Independent
Prof. W.H. Wittrick	—	University of Birmingham.

The work on this Item was carried out in the Aircraft Noise and Structural Dynamics Group of ESDU. The member of staff who undertook the technical work involved in the initial assessment of the available information and construction and subsequent development of the Item was

Mr R.F. Lambert	—	Group Head.

ESDU Copyright material. For current status contact ESDU.

Documents
Document Sharing Hub

NATURAL FREQUENCIES OF THICK-WALLED ISOTROPIC, CIRCULAR-CYLINDRICAL SHELLS (SHEAR DIAPHRAGM END CONDITIONS)

CONTENTS

		Page
1.	NOTATION	1
2.	INTRODUCTION	3
3.	NOTES ON NATURAL FREQUENCY DATA PRESENTED	3
3.1	General	3
3.2	Mode Numbers and Displacements	4
3.2.1	Flexural modes	4
3.2.2	Torsional modes	4
3.3	Natural Frequencies	5
3.3.1	Coupled modes	5
3.3.2	Torsional modes of vibration	5
4.	DISPLACEMENTS AND STRESSES	6
5.	EFFECT OF POISSON'S RATIO	6
6.	OTHER SHELL THEORIES	6
7.	DERIVATION AND REFERENCE	7
7.1	Derivation	7
7.2	Reference	7
8.	EXAMPLE	7
9.	TABLE	9
	FIGURES 1 TO 22	10 TO 25
	APPENDIX A – COMPUTER PROGRAM FOR EVALUATION OF VIBRATION MODES AND MAXIMUM STRESSES IN THICK-WALLED SHELLS HAVING SHEAR DIAPHRAGM END CONDITIONS	26
A.1	GENERAL	26
A.2	DATA INPUT	27
A.2.1	General	27
A.2.2	Shell Material Properties	27
A.2.3	Shell Geometry	27
A.2.4	Case Data	27
A.2.5	Input Repeat Options	28

ESDU Copyright material. For current status contact ESDU.

Documents
Document Sharing Hub

Full document details: ESDU 81018 B-R2 2012

A.3 DATA OUTPUT 28
A.3.1 Shell Geometry and Material Properties 28
A.3.2 Frequency Data Output 28
A.3.3 Displacement and Stress Data Output 28
A.4 EXAMPLE INPUT AND OUTPUT 29
A.4.1 Listing of Input File 29
A.4.2 Listing of Computer Output 30
A.4.3 Notes on the Computer Output 32

ESDU Copyright material. For current status contact ESDU.

Documents
Document Sharing Hub
Full document details: ESDU 81018 B-R2 2012

NATURAL FREQUENCIES OF THICK-WALLED ISOTROPIC, CIRCULAR-CYLINDRICAL SHELLS (SHEAR DIAPHRAGM END CONDITIONS)

1. NOTATION

		Units	
		SI	*British*
c	$(E/\rho)^{1/2}$ for shell material*	m/s	in/s
c_T	$(G/\rho)^{1/2}$ for shell material*	m/s	in/s
E	Young's modulus for shell material	N/m^2	lbf/in^2
f	shell natural frequency	Hz	Hz
G	shear modulus for shell material	N/m^2	lbf/in^2
K	frequency coefficient		
K_T	torsional frequency coefficient		
ΔK	increment in frequency coefficient		
L	shell length	m	in
m	axial mode number		
n	circumferential mode number		
Q	accuracy parameter (see Section A.1)		
R	shell mean radius	m	in
r	radial coordinate (see Sketch 1.1)	m	in
S_r	direct stress in radial direction (see Figure 1)	N/m^2	lbf/in^2
S_x	direct stress in axial direction (see Figure 1)	N/m^2	lbf/in^2
S_θ	direct stress in circumferential direction (see Figure 1)	N/m^2	lbf/in^2
T	time	s	s
t	shell thickness (see Sketch 1.1)	m	in
$U(r)$	axial displacement amplitude	m	in
u	axial displacement	m	in

Issued August 1981
With Amendments A and B, December 1992
Re-issued December 2012 – 32 pages

ESDU Copyright material. For current status contact ESDU.
Documents
Document Sharing Hub
Full document details: ESDU 81018 B-R2 2012

$V(r)$	circumferential displacement amplitude	m	in
v	circumferential displacement	m	in
$W(r)$	radial displacement amplitude	m	in
w	radial displacement	m	in
x	axial coordinate (see Sketch 1.1)	m	in
θ	circular coordinate in radial plane (see Sketch 1.1)	rad	rad
ρ	shell material density	kg/m^3	*
ν	Poisson's ratio of shell material		
τ_{rx}	shear stress } see Figure 1	N/m^2	lbf/in^2
$\tau_{r\theta}$	shear stress } see Figure 1	N/m^2	lbf/in^2
$\tau_{x\theta}$	shear stress } see Figure 1	N/m^2	lbf/in^2
ϕ	thickness mode torsional coefficient		

* For most common structural metallic materials (*e.g.* steels and aluminium alloys) the values of c and c_T are approximately 5080 m/s (200 000 in/s) and 3150 m/s (124 000 in/s) respectively.

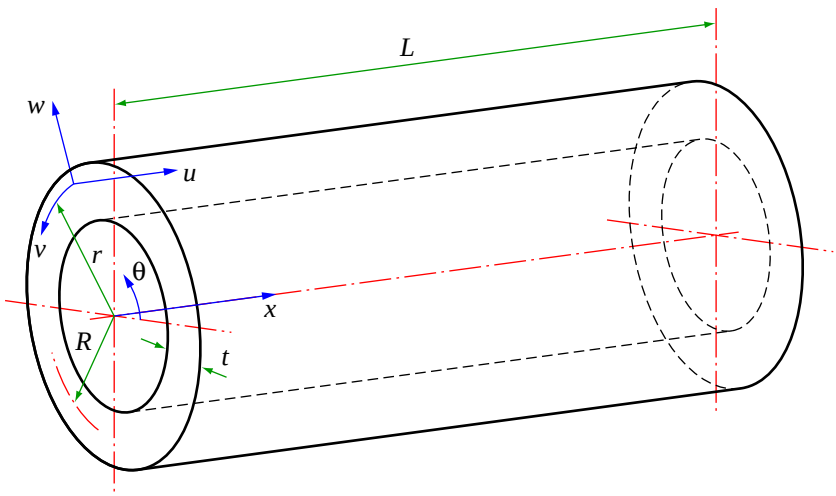

Sketch 1.1 Shell coordinate system

ESDU Copyright material. For current status contact ESDU.
Documents
Document Sharing Hub
Full document details: ESDU 81018 B-R2 2012

2. INTRODUCTION

This Item provides graphical data and a computer program for the estimation of the lower natural frequencies of thick-walled isotropic, circular cylinders based on the three-dimensional theory of elasticity for hollow cylinders. The data on both flexural and torsional vibrations are applicable to initially unstressed, isotropic shells having shear diaphragm end conditions (see Section 3.1 for definition of this end condition). This particular end condition is the only one for which suitable solutions have been obtained for thick shells and so permits the presentation of modal data in Data Item form.

This Item should be used in conjunction with ESDU 78004 (Natural frequencies of thin-walled isotropic, circular-cylindrical shells). In ESDU 78004 similar modal data are provided for thin-walled shells for all combinations of free, shear diaphragm and clamped end conditions. In the present Item the geometric parameters and mode numbers for which the differences between natural frequency given by the three-dimensional elastic theory and thin-shell theory are more than 1 per cent and 5 per cent are indicated.

In Section 3 general information is given on the flexural and torsional modes of free vibration of thick-walled shells. The thickness modes, which are not included in the model when shells are modelled as thin-walled, are discussed. In Section 4 the variations of displacements and stresses through the wall thickness, obtained using the computer program in Appendix A, are discussed and in Section 5 the effects of Poisson's ratio on the natural frequencies are considered. To give guidance on the desirability of modelling shells as either thin-walled or thick-walled the range of applicability of thin-shell theories is discussed in Section 6 where specific information is given for a wide range of shell geometries. A worked example, which illustrates the application of this Item, is given in Section 8 and the computer output for this example is given in Section A.6.

3. NOTES ON NATURAL FREQUENCY DATA PRESENTED

3.1 General

The figures and computer program (see Appendix A) in this Item provide a means of estimating the lower natural frequencies of vibration of isotropic circular-cylindrical shells with shear diaphragm (SD)* end conditions. The data provided are derived using linear, three-dimensional elastic theory and solving for the eigenvalues of the frequency determinant formed by equating to zero the normal and shear stresses (S_r, τ_{rx} and $\tau_{r\theta}$) on the cylinder inner and outer surfaces.

These data are intended for thick-walled shells. For thin-walled isotropic, circular-cylindrical shells a simpler analysis is possible and natural frequency data for such shells are provided in ESDU 78004.

For the shear diaphragm end condition the shear diaphragm is assumed to be thin and stiff only within its own plane. Because the shear diaphragm is thin it is assumed to provide zero longitudinal stress at the shell ends, and its in-plane stiffness ensures that there are no circumferential or radial displacements at the shell ends. The boundary conditions for the shell are therefore $v = w = S_x = 0$. The shear diaphragm is also assumed to be massless so that the only inertia terms considered in the analysis are those corresponding to the inertia forces resulting from the radial, circumferential and axial accelerations of the shell wall.

* In other technical literature the shear diaphragm condition may be referred to as "simply-supported" or "freely-supported". However these terms are not strictly applicable to shells because they do not indicate that there is zero radial and tangential displacement of the shell surface at its ends.

ESDU Copyright material. For current status contact ESDU.
Documents
Document Sharing Hub
Full document details: ESDU 81018 B-R2 2012

3.2 Mode Numbers and Displacements

3.2.1 Flexural modes

The axial, circumferential and radial displacements (u, v and w respectively) are given by the relationships,

$$u = U(r) \cos\frac{m\pi x}{L} \cos n\theta \cos 2\pi f T, \tag{3.1}$$

$$v = V(r) \sin\frac{m\pi x}{L} \sin n\theta \cos 2\pi f T, \tag{3.2}$$

and

$$w = W(r) \sin\frac{m\pi x}{L} \cos n\theta \cos 2\pi f T, \tag{3.3}$$

where $U(r)$, $V(r)$ and $W(r)$ are amplitude parameters which are functions of radius.

There are certain values of θ at which one, or two, of these displacements are zero. These values of θ are a function of the circumferential mode number n (see Figure 2a) where n is the number of circumferential waves around the shell (n = 0, 1, 2, *etc*). Similarly there are values of x at which one, or two, of the displacements are zero. These values of x are a function of the axial mode number m (see Figure 2b) where m is the number of half waves in the length of the shell (m = 1, 2, 3 *etc*).

For thin shells $W(r)$ may be considered to be constant, and in this case n and m may be defined in terms of nodal lines as in ESDU 78004.

In Figure 3 the displacements are plotted in terms of $U(r)$, $V(r)$ and $W(r)$ for the first six modes for a particular shell. For each natural frequency these displacements are normalised such that the maximum is unity. The displacements in Figure 3 are typical of those for modes having long axial wavelengths $(2L/m)$ and $n \geq 1$. The first three modes have predominantly radial, axial and circumferential displacements respectively. The fourth and higher frequency modes are referred to as thickness modes and are characterised by at least one change in sign of the predominant displacement through the shell thickness.

For $n = 0$ the modes are axisymmetric and correspond to longitudinal waves which have zero circumferential displacements. In Figure 4 the normalised axial and radial displacements ($U(r)$ and $W(r)$ respectively) are plotted for the first six longitudinal wave modes for a particular shell. These displacements are typical for modes having long axial wavelengths. The first and second modes have predominantly axial and radial displacements; the second mode is referred to as the breathing mode. The displacements of the four higher frequency modes in Figure 4 show the longitudinal wave thickness-modes for the n = 0 condition.

3.2.2 Torsional modes

For the torsional modes the axial and radial displacements are everywhere zero and the circumferential displacement is given by the relationship,

$$v = V(r) \sin\frac{m\pi x}{L} \cos 2\pi f T, \tag{3.4}$$

where m is the axial mode number. As for the flexural modes m is equal to the number of half wavelengths in the shell length.

ESDU Copyright material. For current status contact ESDU.

Documents
Document Sharing Hub

Full document details: ESDU 81018 B-R2 2012

3.3 Natural Frequencies

3.3.1 Coupled modes

For each combination of m and n, for thick shells, there are a number of modes which may be described in terms of their axial, circumferential and radial displacements through the shell thickness. For a range of parameters L/mR and n, natural frequency coefficients, K, are provided in graphical form for the lower three coupled modes at discrete values of R/t.

Shell natural frequencies, except for torsional modes are obtained from the expression

$$f = K\frac{c}{R}, \tag{3.5}$$

where values of K are presented in Figures 5 to 19.

When it is necessary to interpolate for values of K at intermediate R/t ratios it is recommended that graphical interpolation should be used. Alternatively, the computer program can be used to evaluate the required natural frequencies for any particular shell geometry.

3.3.2 Torsional modes of vibration

The first set of natural frequencies of torsional vibration is independent of shell wall thickness, as for thin-walled shells, and is given by

$$f = \frac{c_T}{L}K_T, \tag{3.6}$$

where $K_T = \frac{m}{2}$ and $m = 1, 2, 3, etc.$

For thick shells additional sets of thickness modes exist and a more general expression for K_T, for use in Equation (3.6), is

$$K_T = \left[\left(\frac{L}{t}\phi\right)^2 + \left(\frac{m}{2}\right)^2\right]^{1/2}. \tag{3.7}$$

Values of ϕ for the first three sets of thickness modes (second, third and fourth sets of shell torsional modes) are presented in Figure 20. For the first set of torsional modes $\phi = 0$.

From Equation (3.7) and Figure 20 it is evident that as the shell thickness decreases the values of K_T, and hence natural frequencies, increase. In the case of thin shells the thickness torsional natural frequencies tend to infinity so that only the first set of torsional modes is of interest and m defines the order in which these modes occur as frequency increases.

In the first set of torsional modes $(\phi = 0)$ the circumferential displacement of each point within the shell wall, at any transverse section, is proportional to the radius at that point.

For the axisymmetric modes, unless the shell length is very short relative to the shell radius, the mode of lowest frequency is the first torsional mode.

ESDU Copyright material. For current status contact ESDU.

Documents
Document Sharing Hub

Full document details: ESDU 81018 B-R2 2012

4. DISPLACEMENTS AND STRESSES

For each of the shell longitudinal wave coupled modes the maximum displacements and associated stresses may be calculated using the computer program listed in Appendix A. The values of $U(r)$, $V(r)$ and $W(r)$ are normalised as discussed in Section 3.2.1. The stresses are the maximum stresses for the particular vibration mode considered and correspond to the normalised displacements. The three-dimensional linear theory of elasticity is used in this Item so that stresses can be scaled in proportion to the absolute displacements. The locations of the maximum displacements and stresses are given in Table 9.1 and the section locations are shown in Figure 2. At the location of a maximum displacement, u, v or w, the other two displacements are either a maximum or zero; stresses behave similarly. For the special axisymmetric case of $n = 0$, displacement v and stresses $\tau_{r\theta}$ and $\tau_{x\theta}$ are everywhere zero.

5. EFFECT OF POISSON'S RATIO

In calculating the frequency coefficients for Figures 5 to 19 a value of $\nu = 0.3$ was used. For other values of ν the computer program in Appendix A should be used. In torsional vibrations K_T is independent of ν.

Typical variations in K over the range of ν from 0 to 0.5 are shown in Figure 21, for the lowest frequency mode (mode 1) having $n = 2$, for three values of L/mR. As the ratio R/t approaches thin-shell values, for modes having n greater than the n corresponding to the lowest frequency at the same m, the value of K (and hence frequency) is in most cases approximately inversely proportional to $\sqrt{1-\nu^2}$.

6. OTHER SHELL THEORIES

In thin-shell theories, radial displacements are assumed to be constant through the shell thickness and axial and circumferential displacements are assumed to vary linearly through the shell thickness; also shear deformation and rotary inertia effects are neglected. These assumptions allow a much simpler approach to the evaluation of shell natural frequencies than the three-dimensional elastic theory used in this Item. As the thickness ratio R/t and L/t decrease, the effects of shear deformation and rotary inertia become increasingly significant so that natural frequencies estimated using thin-shell theory become increasingly inaccurate. The effects of shear deformation and rotary inertia may also be significant for relatively thin shells as the number of circumferential and longitudinal waves increases.

As a guide to the range of applicability of thin-shell theory the percentage differences between the three-dimensional elastic theory and the Flügge thin-shell theory are presented in Figure 22. Data presented are for the first mode (predominantly radial displacements) of shells with shear diaphragm end conditions and cover the range of n from 1 to 20 and the range of L/mR from 0.1 to 20. For a particular R/t ratio, the natural frequency for any combination of n and L/mR which lie on, or fall below, the dashed or full lines may be estimated using thin-shell theory if a difference from the three-dimensional elastic theory of 1 per cent or 5 per cent respectively is acceptable. The Flügge thin-shell theory predicts higher natural frequencies than the three-dimensional elastic theory.

The commonly used limiting value of thin-shell assumptions, $R/t = 20$, is shown to be appropriate for the calculation of natural frequencies for the lower values of n providing the axial half wavelength, L/m, is not too small. It is expected that the differences between the predicted natural frequencies using three-dimensional elastic theory and thin-shell theories will increase for the higher mode types in which torsional and axial displacements are predominant.

ESDU Copyright material. For current status contact ESDU.

Documents
Document Sharing Hub

Full document details: ESDU 81018 B-R2 2012

Thick-shell theories, in which allowance is made for linear variation of displacements through the shell wall and some account is taken of the effects of shear deformation and rotary inertia, are discussed in Derivation 4 and Reference 5. The results presented in those papers for the natural frequencies of thick-walled shells with shear diaphragm end conditions agree well with those estimated using this Item. In Reference 5 methods of extending the solutions to other boundary conditions are indicated.

7. DERIVATION AND REFERENCE

7.1 Derivation

The derivation lists selected sources that have assisted in the preparation of this Item.

1. GAZIS, D.C. — Three-dimensional investigation of the propagation of waves in hollow circular cylinders. I. Analytical foundation. *J. Acoust. Soc. Am.*, Vol. 31, No. 5, pp.568-573, May 1959.

2. GAZIS, D.C. — Three-dimensional investigation of the propagation of waves in hollow circular cylinders. II. Numerical results. *J. Acoust. Soc. Am.*, Vol. 31, No. 5, pp.573-578, May 1959.

3. ARMENÁKAS, A.E., GAZIS, D.C., HERRMANN, G. — *Free vibrations of circular cylindrical shells*. Pergamon Press, 1969.

4. LEISSA, A.W. — Vibration of shells. NASA SP-288, 1973.

7.2 Reference

The reference given is a recommended source of information supplementary to that in this Item.

5. REISMAN, H., MEDIGE, J. — Forced motion of cylindrical shells. *Proc. Am. Soc. Civil Engrs, J. Eng. Mech. Div.*, Vol. 94, No. EM5, pp.1167-1182, paper 6183, October 1968.

8. EXAMPLE

It is required to estimate the lowest natural frequency for an initially unstressed circular cylindrical shell with shear diaphragms at each end. The shell has the following dimensions and physical properties:

$$R = 320 \text{ mm}, \qquad L = 1.10 \text{ m}, \qquad t = 145 \text{ mm},$$

$$E = 70\,000 \text{ MN/m}^2, \qquad \rho = 2\,710 \text{ kg/m}^3, \qquad \nu = 0.3.$$

Firstly $$\frac{R}{t} = \frac{320}{145} = 2.21,$$

and $$c = \sqrt{\frac{70\,000 \times 10^6}{2710}} = 5082 \text{ m/s}.$$

ESDU Copyright material. For current status contact ESDU.

Documents
Document Sharing Hub

Full document details: ESDU 81018 B-R2 2012

The lowest flexural made natural frequency occurs in a mode having an axial mode number $m = 1$, for which

$$\frac{L}{mR} = \frac{1.10 \times 10^3}{1 \times 320} = 3.44 .$$

From Figures 8, 11 and 14 the lowest natural frequencies, for $L/mR = 3.44$, occur in a mode having either $n = 1$ or 2 so both modes must be investigated. The values of K for modes $n = 1$ and $n = 2$ from Figures 8, 11 and 14 and the graphically interpolated values for $R/t = 2.21$ are tabulated.

	K	
R/t	$n = 1$	$n = 2$
1	0.061	0.11
2	0.055	0.073
5	0.053	0.039
2.21	0.055	0.068

The lowest flexural frequency occurs in the $m = 1$, $n = 1$ mode and is given by Equation (3.5)

$$f = 0.055 \times \frac{5082}{320 \times 10^{-3}}$$
$$= 873 \text{ Hz.}$$

The lowest torsional frequency is given by Equation (3.6) with $K_T = ½$.

For isotropic materials

$$G = \frac{E}{2(1+\nu)}$$
$$= \frac{70\ 000}{2(1+0.3)} = 26\ 920 \text{ MN/m}^2 ;$$

therefore $$c_T = \sqrt{\frac{26\ 920 \times 10^6}{2710}}$$
$$= 3152 \text{ m/s,}$$

and $$f = \frac{3152}{1.1} \times \frac{1}{2} = 1433 \text{ Hz.}$$

Hence the lowest natural frequency for the shell is 873 Hz and occurs in the coupled mode with $m = 1$ and $n = 1$.

ESDU Copyright material. For current status contact ESDU.

Documents
Document Sharing Hub

Full document details: ESDU 81018 B-R2 2012