ESDU 83020

Issued August 1983
Re-issued March 2012

Paraboloidal antennas: wind loading.
Part 2: surface pressure distribution

ESDU Copyright material. For current status contact ESDU.

Documents
Document Sharing Hub

Full document details: ESDU 83020-R1 2012

ESDU DATA ITEMS

Data Items provide validated information in engineering design and analysis for use by, or under the supervision of, professionally qualified engineers. The data are founded on an evaluation of all the relevant information, both published and unpublished, and are invariably supported by original work of ESDU staff engineers or consultants. The whole process is subject to independent review for which crucial support is provided by industrial companies, government research laboratories, universities and others from around the world through the participation of some of their leading experts on ESDU Technical Committees. This process ensures that the results of much valuable work (theoretical, experimental and operational), which may not be widely available or in a readily usable form, can be communicated concisely and accurately to the engineering community.

We are constantly striving to develop new work and review data already issued. Any comments arising out of your use of our data, or any suggestions for new topics or information that might lead to improvements, will help us to provide a better service.

THE PREPARATION OF THIS DATA ITEM

The work on this particular Item was monitored and guided by the following Working Party:

Mr M.D. Churchlow	—	Marconi Research Centre, Chelmsford
Mr A.T. Humphrey	—	Marconi Research Centre, Chelmsford
Mr T. Iinuma	—	Mitsubishi Electric (U.K.) Ltd
Mr R.J. Melling	—	British Telecom
Mr R. Sowerby	—	Andrew Antennas
Mr G. Wiskin	—	British Broadcasting Corporation

on behalf of the Wind Engineering Panel which has the following constitution:

Chairman

Mr T.V. Lawson	—	Bristol University

Members

Mr D.D. Croft		Ove Arup and Partners
Prof. A.G. Davenport*	—	University of Western Ontario, Canada
Dr D.M. Deaves	—	Atkins Research and Development
Dr A.R. Flint	—	Flint and Neill
Mr D.H. Freeston*	—	University of Auckland, New Zealand
Mr R.I. Harris	—	Cranfield Institute of Technology
Mr J.R. Mayne	—	Building Research Establishment
Mr R.J. Melling	—	British Telecom
Dr G.A. Mowatt	—	CJB - Earl and Wright Ltd
Mr J.R.C. Pedersen	—	Independent
Mr C. Scruton	—	Independent
Mr R.E. Whitbread	—	National Maritime Institute.
Mr G. Wiskin	—	British Broadcasting Corporation.

* Corresponding Member

The work on this Item was carried out in the Wind Engineering Group of ESDU under the supervision of Mr N. Thompson. The member of staff who undertook the technical work involved in the initial assessment of the available information and the construction and subsequent development of the Item was

Mr B.C. Freeman — Senior Engineer.

ESDU Copyright material. For current status contact ESDU.

Documents
Document Sharing Hub

Full document details: ESDU 83020-R1 2012

PARABOLOIDAL ANTENNAS: WIND LOADING. PART 2: SURFACE PRESSURE DISTRIBUTION

CONTENTS

		Page
1.	NOTATION AND UNITS	1
2.	PURPOSE AND SCOPE OF THIS DATA ITEM	2
3.	PRESSURE DISTRIBUTIONS ON PARABOLOIDAL ANTENNAS	3
3.1	General Considerations	3
3.2	Data for 0° and 180° Incidence	3
3.3	Data for Other Incidences	3
3.4	Uncertainty	4
4.	REFERENCES AND DERIVATIONS	6
4.1	References	6
4.2	Derivation	6
FIGURES 1 to 8		7 to 13
APPENDIX A		14
A1.	SUMMARY OF INTEGRATION PROCEDURE	14
FIGURES A1 to A3		15
APPENDIX B		16
B1.	INTERPOLATION AND EXTRAPOLATION	16
FIGURES B1 to B6		17 to 20

ESDU Copyright material. For current status contact ESDU.

Documents
Document Sharing Hub
Full document details: ESDU 83020-R1 2012

PARABOLOIDAL ANTENNAS: WIND LOADING. Part 2: Surface Pressure Distribution

1. NOTATION AND UNITS

		Units	
		SI	*Imperial*
A	reference area*, $\pi d^2/4$	m^2	ft^2
a	depth of paraboloid, see Sketch 1.1	m	ft
C_M	moment coefficient about axis normal to $0x$ and wind velocity vector, see Sketch 1.1		
C_p	pressure coefficient, $(p - p_a)/(\frac{1}{2}\rho V^2)$		
C_T	transverse force coefficient, component normal to paraboloid axis and in plane containing axis and wind velocity vector, see Sketch 1.1		
C_X	normal force coefficient, component along $0x$ direction, see Sketch 1.1		
d	diameter of paraboloid rim, see Sketch 1.1	m	ft
f	focal length of paraboloid	m	ft
M	moment, $\frac{1}{2}\rho V^2 A d C_M$	Nm	lbf ft
p, p_a	local and ambient static pressures respectively	N/m^2	lbf/ft^2
r, β	polar coordinates of point on reference plane through paraboloid vertex and parallel to antenna rim, with origin at vertex and $\beta = 0$ along C_T direction, see Sketch 1.1	m, degree	ft, degree
T	transverse force-component, $\frac{1}{2}\rho V^2 A C_T$	N	lbf
V	time-averaged wind velocity at antenna vertex height	m/s	ft/s
X	normal force-component, $\frac{1}{2}\rho V^2 A C_X$	N	lbf
$0x$, $0y$, $0z$	body axes, set of right-handed Cartesian coordinate axes fixed with respect to paraboloid, having origin at paraboloid vertex and $0x$ along the negative paraboloid axis; for $\theta = 0° = \psi$, $0z$ is along the C_T direction		
α	incidence angle, angle between $0x$ axis and the wind velocity vector, see Equation (3.1)	degree	degree

For footnotes see end of Notation Section

Issued August 1983
Re-issued March 2012 – 20 pages

ESDU Copyright material. For current status contact ESDU.
Documents
Document Sharing Hub
Full document details: ESDU 83020-R1 2012

β	(see, r, β)	degree	degree
β_z	angle locating 0z axis on antenna reference plane, see Equation (3.2)	degree	degree
θ, ψ	elevation and azimuth angles of antenna axis relative to datum position such that for $\theta = 0° = \psi$, 0x is along-wind†	degree	degree
ν	kinematic viscosity of fluid (typical value for air = 1.45×10^{-5} m^2/s, 1.564×10^{-4} ft^2/s)	m^2/s	ft^2/s
ρ	density of fluid (typical value for air = 1.23 kg/m^3, 2.378×10^{-3} slug/ft^3)	kg/m^3	‡slug/ft^3

* Note that A is independent of the inclination of the antenna to the flow.

† For other purposes elevation and azimuth angles may be measured from other datum positions, *e.g.* from horizontal for elevation and from North for azimuth. Care should be exercised to ensure that correct values are derived for use in this Data Item.

‡ 1 slug = 32.184 lbm.

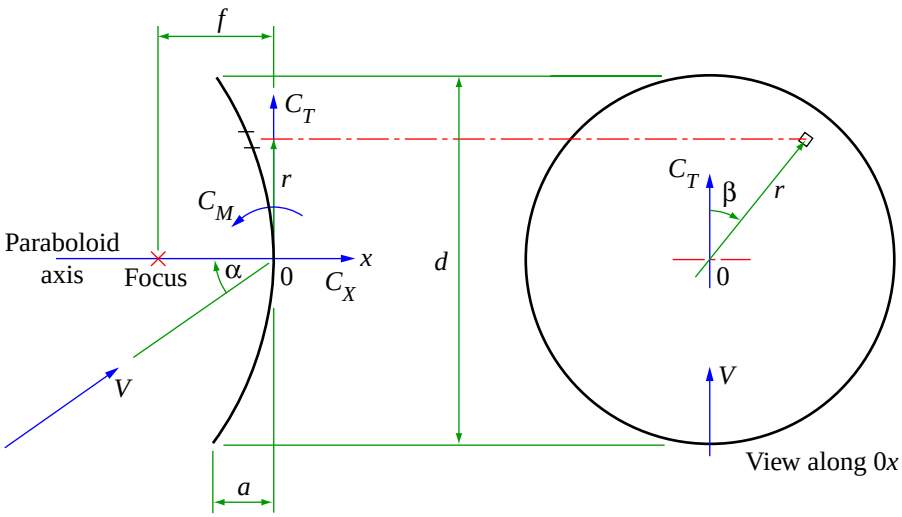

Sketch 1.1

2. PURPOSE AND SCOPE OF THIS DATA ITEM

This Data Item presents information on the mean pressure distribution on the surface of paraboloidal antennas, to supplement the information on mean overall forces and moments given in Reference 1. Data are presented for isolated antennas with minimal backup and support structure and in uniform, low turbulence flow. Except for 0° and 180° incidence the data are presented only for antennas with focal length/diameter ratios of 0.33 and 0.4 but some guidance on interpolation or extrapolation is given in Appendix B.

ESDU Copyright material. For current status contact ESDU.
Documents
Document Sharing Hub
Full document details: ESDU 83020-R1 2012

3. PRESSURE DISTRIBUTIONS ON PARABOLOIDAL ANTENNAS

3.1 General Considerations

Because of the symmetry of a thin, isolated paraboloidal antenna in uniform flow, the pressure distribution on it can be presented as a function of the focal length/diameter ratio, f/d, and flow incidence angle, α, independently of the individual elevation* and azimuth* angles, θ and ψ which contribute to the incidence. These angles are related by

$$\alpha = \cos^{-1}(\cos\theta\cos\psi) . \tag{3.1}$$

The location of the 0z body axis on the antenna reference plane (r, β) is given by

$$\beta_z = \sin^{-1}(\sin\psi/\sin\alpha) , \tag{3.2}$$

where β_z is the axis location measured clockwise (looking along 0x) from $\beta = 0°$. Note that from Equation (3.1) $\alpha = 0°$ only when ψ and θ are also both zero. For $\psi = 0°$ and any value of θ, 0z is along the $\beta = 0°$ direction (*i.e.* along C_T).

The data are presented in terms of contours of constant pressure coefficient, C_p [$= (p - p_a)/(\frac{1}{2}\rho V^2)$], for each face separately. The local pressure difference is then given by the algebraic difference between the C_p values at the same location on each face, multiplied by $\frac{1}{2}\rho V^2$.

Integration and appropriate resolution of the pressure distribution gives the force and moment coefficient values C_X (along 0x), C_T (along the $\beta = 0°$ direction) and C_M (about the $\beta = 90°/270°$ axis). The data presented have been constrained to give coefficient values within a similar uncertainty to that of the coefficient values given by Reference 1 and a comparison between these values is given in Figures A1 to A3 in Appendix A.

3.2 Data for 0° and 180° Incidence

For these cases, for isolated antennas with uniform flow, the pressure coefficient contours are concentric circles centred on the paraboloid axis. The variation of C_p along a radius is presented as a function of f/d in Figures 1 and 2.

3.3 Data for Other Incidences

Figures 3 to 8 present pressure coefficient contours for both surfaces of paraboloids of $f/d = 0.33$ and $f/d = 0.4$, at incidences of 60°, 90° and 120°, for isolated antennas in uniform, low turbulence flow.

Because the pressure distribution is symmetrical about the $\beta = 0°/180°$ axis, only one half is shown on Figures 3 to 8. Sketch 3.1 shows examples of conventions adopted in presenting the contours. Except across $\beta = 0°/180°$, incomplete contours are ended with a broken line. Within a closed area the pressure coefficient, unless otherwise indicated, is less than, or is greater than, the next equal interval from the contours shown.

* For other purposes elevation and azimuth angles may be measured from other datum positions, *e.g.* from horizontal for elevation and from North for azimuth. Care should be exercised to ensure that correct values are derived for use in this Data Item.

ESDU Copyright material. For current status contact ESDU.

Documents
Document Sharing Hub

Full document details: ESDU 83020-R1 2012

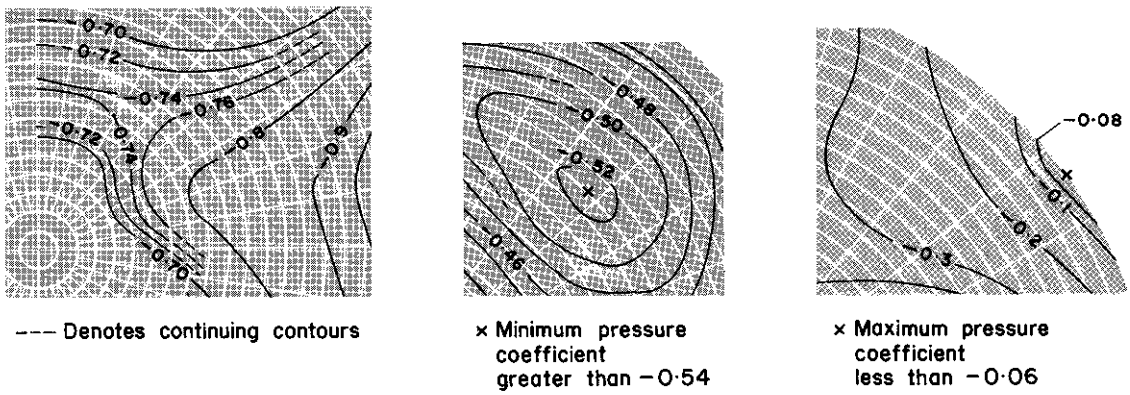

Sketch 3.1

It should be noted that the pressure coefficient at $r/d = 0.5$ is negative in all cases* for all β.

Appendix B provides some guidance on interpolation or extrapolation of the data to other values of α or f/d.

3.4 Uncertainty

The data are based primarily on information from Derivations 4 and 6 for antennas in uniform, low turbulence flow together with a few data from Derivations 2, 3, 5 and 7 which confirm the general trends.

It is not practicable to provide precise guidance on the uncertainty of the data presented but Figures A1 to A3 compare the integrated force and moment coefficients with the predictions of Reference 1.

The trends of the experimental data are followed closely by the pressure distributions in this Data Item but it was found necessary to correct the magnitudes† in order to match the integrated force and moment coefficients to those from Reference 1. The initial uncorrected distributions were generally within ±0.15 in C_p from the experimental values. The correction used is of the form

$$(1 - C_{p\text{Item}}) = \lambda(1 - C_{p\text{expt.}}) \ , \tag{3.3}$$

where λ is a constant, which is similar to a wind-tunnel blockage correction. It is evident, however, from the magnitude (and, in some cases, direction) of the corrections that they cannot be ascribed entirely to blockage effects. For $\alpha = 0°$, 120° and 180° the initial integrated estimates of C_X required correction but C_T and C_M were well predicted. The correction was therefore applied to the leeward face pressures (which are near uniform) only. For $\alpha = 60°$ and 90° it was found that the required correction could also best be achieved by correcting only the leeward‡ face pressures. The values used for λ are given in Table 3.1.

* One possible, but unlikely, exception occurs if the stagnation point occurs right on the edge. This will rarely be a stable condition however.

† Similar differences are found between the measured force and moment coefficients from Derivations 4 (corresponding to Derivation 6 pressure coefficient data) and 5 and the predictions of Reference 1.

‡ The leeward face is here taken as the face on which stagnation ($C_p = 1$) does *not* occur.

ESDU Copyright material. For current status contact ESDU.
Documents
Document Sharing Hub
Full document details: ESDU 83020-R1 2012

TABLE 3.1

f/*d*	λ			
	Concave face		*Convex face*	
α°	0.33	0.4	0.33	0.4
0	1.00	1.00	0.88	0.88
60	1.00	1.00	1.00	1.05
90	0.95	0.90	1.00	1.00
120	1.13	1.11	1.00	1.00
180	0.95	1.04	1.00	1.00

ESDU Copyright material. For current status contact ESDU.

Documents
Document Sharing Hub
Full document details: ESDU 83020-R1 2012