ESDU 85021

Issued August 1985
With Amendments A to C
February 2005
Re-issued August 2012

Analysis of pretensioned bolted joints subject to tensile (separating) forces

Associated software: ESDUpac A8521

Endorsed by
The Institution of Mechanical Engineers
The Royal Aeronautical Society

ESDU Copyright material. For current status contact ESDU.

Documents
Document Sharing Hub

ESDU DATA ITEMS

Data Items provide validated information in engineering design and analysis for use by, or under the supervision of, professionally qualified engineers. The data are founded on an evaluation of all the relevant information, both published and unpublished, and are invariably supported by original work of ESDU staff engineers or consultants. The whole process is subject to independent review for which crucial support is provided by industrial companies, government research laboratories, universities and others from around the world through the participation of some of their leading experts on ESDU Technical Committees. This process ensures that the results of much valuable work (theoretical, experimental and operational), which may not be widely available or in a readily usable form, can be communicated concisely and accurately to the engineering community.

We are constantly striving to develop new work and review data already issued. Any comments arising out of your use of our data, or any suggestions for new topics or information that might lead to improvements, will help us to provide a better service.

THE PREPARATION OF THIS DATA ITEM

The work on this particular Data Item was monitored and guided by the Stress Analysis and Strength of Components Committee, which first met in 1964 and now has the following membership:

Chairman
Prof. C.E. Turner — Imperial College of Science and Technology

Vice-Chairman
Prof. T.G.F. Gray — University of Strathclyde

Members
Dr I.J. Bickley — Mirrlees Blackstone (Stockport) Ltd
Dr M.S.G. Cullimore — Independent
Dr L.C. Laming — Imperial College of Science and Technology
Mr R.B. Laycock — European Gas Turbines Ltd
Mr A.B. Smith — Lloyd's Register of Shipping
Mr J.V. Vint — Independent.

The Item was accepted for inclusion in the Structures Series by the Aerospace Structures Committee, which first met in 1940 and now has the following membership:

Chairman
Mr J.H. van der Sloot — Fokker B.V., Schiphol, The Netherlands

Vice-Chairman
Mr J.K. Bennett — Independent

Members
Dr P. Bartholomew — Royal Aerospace Establishment, Farnborough
Mr A. Dickson — British Aerospace Defence Ltd
Mr K. Fitzsimons — Westland Helicopters Ltd
Mr P.J. Mitchelmore — Independent

(*Continued on inside back cover*)

ESDU Copyright material. For current status contact ESDU.

Documents
Document Sharing Hub

Full document details: ESDU 85021 C-R1 2012

ANALYSIS OF PRETENSIONED BOLTED JOINTS SUBJECT TO TENSILE (SEPARATING) FORCES

CONTENTS

		Page
1.	THEORY	1
1.1	Introduction	1
1.2	Notation	1
1.2.1	General Symbols	2
1.2.2	Suffixes, Prefixes and Primes	3
1.3	Load Path Through an Idealised Joint With a Pretensioned Bolt	5
1.3.1	Linear analysis of load paths through axisymmetrically loaded idealised joints	6
1.4	Load Path Through Practical Joints	10
1.5	LOAD PATHS THROUGH JOINTS WITH THIN FEET	10
1.5.1	Analysis of practical joints with thin feet	11
1.6	Estimation of Stiffnesses k_b and k_f	12
1.6.1	Estimation of bolt stiffness k_b (joints with thick or thin feet)	13
1.6.1.1	The bolt head and the shank	14
1.6.1.2	Bolt thread area	14
1.6.1.3	Load transfer to the nut and nut stiffness	14
1.6.1.4	Washers	15
1.6.2	Estimation of stiffness k_f for thin feet	15
1.6.3	Estimation of effective area of feet (both thick and thin feet)	15
1.7	Analysis of Joints With Thick Feet	16
1.8	Effect of Tolerances	18
1.8.1	Effect of curved or wavy surfaces in joints with thin feet	19
1.9	Effect of Level of Pretension	20
1.10	Effect of Temperature	21
1.10.1	Analysis assuming constant material properties	21
1.10.2	Analysis accounting for changes in material properties	22
1.11	Selection of Bolt Size	22
1.12	Creep	22
1.13	Design Against Fatigue Failure	22
1.14	Effect of Variation of Component Geometry and Material Properties (Joints With Thin Feet)	24

ESDU Copyright material. For current status contact ESDU.

Documents
Document Sharing Hub
Full document details: ESDU 85021 C-R1 2012

1.14.1 Effect of bolt size and hinge point position 25
1.14.2 Effect of component material changes 25
1.14.3 Effect of component thickness 26
1.14.4 Maximum applicable load 26
1.14.5 Effect of *b*/*a* ratio 27
1.14.6 Effect of outer diameter of practical working area of foot, D_f 27
1.15 Derivation 34
1.16 Worked Examples 34
1.16.1 Example 1: joint with thin feet 34
1.16.1.1 Calculation of stiffnesses 35
1.16.1.2 Construction of load diagram, Sketch 1.26 37
1.16.1.3 Effect of temperature fluctuations 38
1.16.2 Example 2: joint with thick feet 39
1.16.2.1 Calculation of stiffnesses 41
1.16.2.2 Calculation for separation load at the heel and bolt yield load 43

2. ESDUpac A8521 48
2.1 Introduction 48
2.2 Notation 48
2.3 Program Structure 48
2.4 Program Limitations 48
2.5 Data Input 49
2.5.1 Selection of analysis option 49
2.5.2 Selection of temperature analysis 50
2.5.3 Bolted joint structure 50
2.5.4 Temperature variations 50
2.5.4.1 No account of change of material properties with temperature 50
2.5.4.2 With account of changing material properties 50
2.5.5 Bolted joint assembly 51
2.6 Program Output and Interpretation 52
2.6.1 Messages 52
2.7 Examples 56
2.7.1 Example 1 Joint with thin feet 56
2.7.2 Example 2 Joint with thick feet 56
2.7.3 Example 3 Joint with component giving additional stiffness 56

ESDU Copyright material. For current status contact ESDU.

Documents
Document Sharing Hub
Full document details: ESDU 85021 C-R1 2012

ANALYSIS OF PRETENSIONED BOLTED JOINTS SUBJECT TO TENSILE (SEPARATING) FORCES

This Data Item provides a method for the analysis of bolted joints in which the bolt is pretensioned and is subject to further tensile load as a consequence of load passing through the joint. The analysis is designed to allow selection of bolt pretension such that, under the application of a known load, the limiting situations of bolt yielding or joint separation do not occur. Several diagrams are included that illustrate the influence of the many variables on the pretension for the limiting situations together with a description of the effect of pretension on the fatigue loading acting on the bolt.

The Data Item is provided in two sections. Section 1 describes the theory and sets out two methods, one for joints with relatively thin feet and one for joints with relatively thick feet. The methods are presented so that hand calculations may be performed and two fully worked example calculations are provided. The methods of Section 1 have been programmed and Section 2 describes the use of the program.

1. THEORY

1.1 Introduction

This Item describes methods of analysis of bolted joints in which the bolt is pretensioned and is subject to further tensile load as a consequence of the load passing through the joint. The analysis is designed to allow selection of the bolt pretension such that, under the application of a known load, the limiting situations of bolt yielding or joint separation do not occur.

In such joints applied loads enter the assembly via the joined members, usually offset from the bolt, see, for example, Sketch 1.1. The way in which the joined members introduce the load into the joint, coupled with the stiffnesses and geometry of the components of the joint assembly and its pretension, governs the distribution of the load among the component parts of the joint. Because of this it is necessary to analyse the load distribution within a joint before its strength or performance can be determined. Some of the stiffnesses involved in such an analysis can only be estimated, mainly because the associated areas of their influence are imprecise quantities. **Accordingly, analysis should be used to investigate and improve joint design rather than to obtain precise solutions of stresses and deflections within the joint**. It should be noted that the entire analysis is carried out in terms of the load on a single bolt but guidance is provided for the case of multi-bolted joints.

This section of the Data Item explains the derivation of the analysis used in ESDUpac A8521 and Section 1.14 gives examples of the variation in the pretension required to prevent yield and separation for a typical bolted joint assembly having thin feet. For joints with thick feet the variation of pretension required to prevent separation is shown graphically.

1.2 Notation

The notation shows both SI and British units. All the figures are non-dimensional so that any coherent system of units may be used. Section 1.16 provides two worked example calculations, one in SI units and the other in British units.

Issued August 1985
With Amendments A to C, February 2005
This page Amendment C
Re-issued August 2012

ESDU Copyright material. For current status contact ESDU.

Documents
Document Sharing Hub

Full document details: ESDU 85021 C-R1 2012

The following notation is illustrated by the joints shown in Sketches 1.1, 1.6 and 1.8. The component parts of the joints will be referred to using the names given in the labels on those sketches. The term 'foot', illustrated in Sketch 1.1, is used throughout this Item, although for many joints it may be part of a flange or plate or some other member.

1.2.1 General Symbols

A	effective cross-sectional area of component	m^2	in^2
a	distance from bolt centre-line to hinge point (see Sketches 1.5a and 1.5b)	m	in
b	distance from bolt centre-line to load line (see Sketch 1.1)	m	in
c	effective diameter of nut or bolt head and associated washer assembly (see Section 1.6.3 and, for an example, Section 1.16.1.1)	m	in
D_f	outer diameter of practical working area of foot (see Section 1.6.3)	m	in
d	diameter	m	in
d_b	nominal diameter of bolt (see Sketch 1.1)	m	in
E	modulus of elasticity of material of component	N/m^2	lbf/in^2
g	effective length of foot (see Sketch 1.8)	m	in
h	thickness	m	in
I	effective second moment of area of foot-print (see Section 1.7 and Sketch 1.8)	m^4	in^4
i	height of bow of slightly arched foot (see Sketch 1.9)	m	in
j	distance from heel of joint to neutral axis of bending of effective area of foot (see Section 1.7 and Sketch 1.8)	m	in
K	axial stiffness of joint	N/m	lbf/in
k	axial stiffness of joint component	N/m	lbf/in
l	length of component	m	in
m	distance from bolt centre-line to heel (see Sketches 1.1 and 1.8 and Section 1.7)	m	in
n_{cb} , n_{cf}	program control integers, see Table 2.2		

ESDU Copyright material. For current status contact ESDU.

Documents
Document Sharing Hub

Full document details: ESDU 85021 C-R1 2012

n_{pb} , n_{pf}	number of plates, see Table 2.2		
$TYPE$	program control integer, see Table 2.2		
P	load	N	lbf
P_{tA} , P_{tAu} , P_{tAum} , P_{tum} , P_{tuex}	see Section 2.4.4.2	N	lbf
p	thread pitch	m	in
R	reaction in region of toe in rigid foot after separation	N	lbf
T	temperature	°C	°C
$TEMP$	program control integer, see Table 2.2	m	in
w	width of foot (see Sketch 1.1)	m	in
x	coefficient correcting actual or reference value to effective value		
α	coefficient of linear thermal expansion	(m/m)/°C	(in/in)/°C
γ	non-dimensional stiffness parameter, see Equation (1.9)		
δ	axial deflection of component	m	in
ε	strain		

1.2.2 Suffixes, Prefixes and Primes

The following are attached to the symbols above as required.

A	at assembly conditions (temperature)
a	externally applied (load or deflection)
as	externally applied load at separation
b	bolt
bs	separation below bolt
c	relates to an additional component
e	relates to conditions with non-flat components
f	foot

ESDU Copyright material. For current status contact ESDU.

Documents
Document Sharing Hub

Full document details: ESDU 85021 C-R1 2012

hs	separation at heel
i	inner
lw	at lower working temperature
n	number of component parts in a stiffness calculation
(nu)	loaded threaded portion of nut
o	outer
p	plate
(pt)	relates to thread pitch
(sh)	shank of bolt
t	pretension value
$t(T)$	pretension value at temperature T
(th)	loaded threaded portion of bolt
uw	at upper working temperature
w	washer
y	yield
Δ	change of quantity from assembly conditions
$'$	prime indicates an effective value (when both real and effective values are used)

These subscripts are also used as labels, together with numbers, when more than one component of the same type is present; see, for example, Sketch 1.6 which shows two plates, labelled p_1 and p_2 , one above and one between two feet labelled f_1 and f_2 .

ESDU Copyright material. For current status contact ESDU.

Documents
Document Sharing Hub
Full document details: ESDU 85021 C-R1 2012

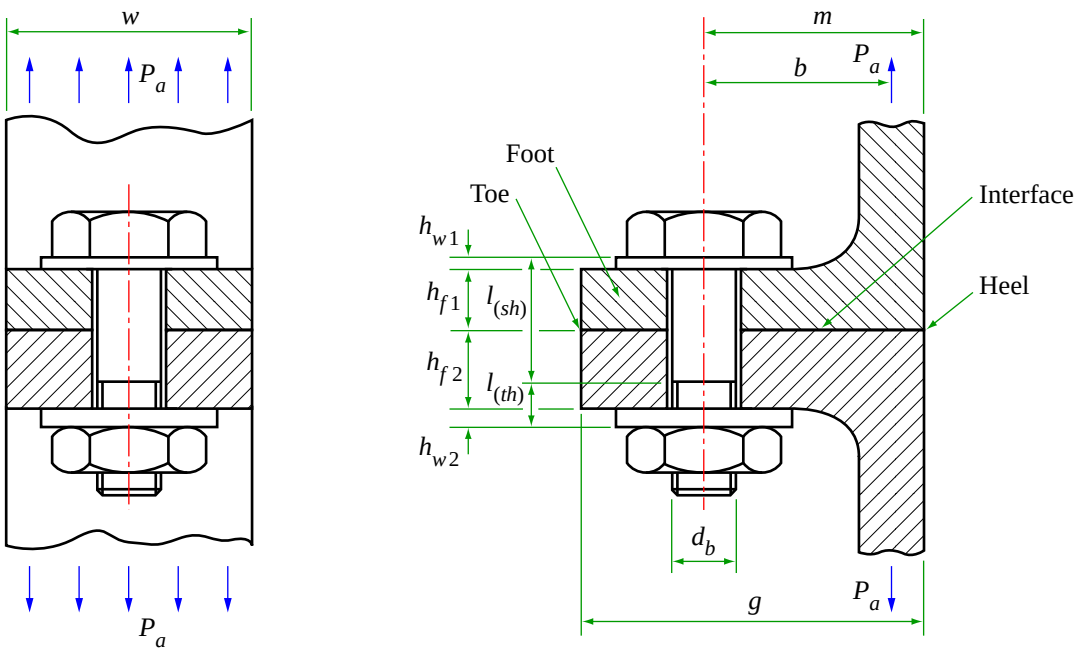

Sketch 1.1 Illustration of notational terms in a simple joint

1.3 Load Path Through an Idealised Joint With a Pretensioned Bolt

In order to describe the paths taken by an applied load through a bolted joint it is convenient to consider an *idealised* joint loaded axisymmetrically with respect to the bolt centre-line, see Sketch 1.2. This is then extended, to cover offset loaded idealised joints. Later sections use these simplified analyses to explain the behaviour of practical joints.

The analyses considered apply to a joint containing only a single bolt. However, they may be extended to multi-bolted joints, such as those at

(i) a straight row of bolts,
(ii) pressurised lids
and (iii) circular flanges.

In each of the cases (i) to (iii) the joint is tightened using more than one bolt. Thus, the joint must be divided into equivalent sections containing only a single bolt carrying its proportion of the load. From this the overall joint behaviour can be assessed. It should be noted that for circular joints, circumferential effects are neglected, which leads to a conservative analysis. Gaskets may be included in the analysis, provided that they extend across the full width of the joint and that they behave linearly across the range of extension of the joint assembly.

ESDU Copyright material. For current status contact ESDU.
Documents
Document Sharing Hub
Full document details: ESDU 85021 C-R1 2012

1.3.1 Linear analysis of load paths through axisymmetrically loaded idealised joints

Sketch 1.2 illustrates an idealised joint in which a single bolt is pretensioned on assembly, so that the bolt and feet loads are P_t, and the opposed loads P_a are applied to the plates. The behaviour of the joint is simplified by assuming that the applied load P_a acts at the interface between the feet and bolt assembly, as shown on Sketch 1.2b. In addition, the nut and the bolt head are assumed to be rigid, with the bolt shank having only extensional stiffness and the feet having only compressive stiffness. The joint can then be idealised as an assembly of springs, as shown in Sketch 1.2c, with the load applied axially to the rigid blocks at each end, which represent the nut and bolt head. The outer springs represent the feet, having combined stiffness k_f, and the inner spring, of stiffness k_b, represents the bolt. The basis of the analysis is to calculate k_f and k_b and from these and the external load to calculate the load in the bolt and in the feet.

Sketch 1.3 shows a graphical presentation of the load deflection behaviour of the idealised joint assembly with tensile loads and deflections shown positive and compressive loads and deflections negative. The line A-B represents the bolt behaviour and has a slope of k_b so that

$$k_b = P_b/\delta_b . \tag{1.1}$$

Similarly, the line C-D represents the behaviour of the feet and has a slope of k_f so that

$$k_f = P_f/\delta_f . \tag{1.2}$$

Note that both k_b and k_f are positive values.

Sketch 1.4a shows a diagram similar to that of Sketch 1.3 but with the datum taken to be at the pretensioned unloaded condition and all loads and deflections as positive quantities. Thus, the lines A-B and C-D on Sketch 1.3 are translated onto Sketch 1.4a as shown. Note that k_f is positive, despite the apparent negative slope of the line C-D in Sketch 1.4a. This sketch shows that as the bolt load is increased so, because the bolt extends, the compressive load in the feet reduces. The load is therefore carried across the interface X-X of Sketch 1.2c as the increased P_b and reduced P_f, or

$$P_a = P_b - P_f . \tag{1.3}$$

Thus, the line E-F on Sketch 1.4a also represents P_a since it is the difference between P_b and P_f. The joint therefore transmits the applied load by increasing the bolt load and simultaneously reducing the joint interface pressure. Note that the increase in P_b as a result of the applied load, that is $P_b - P_t$, is much less than P_a. Sketch 1.4a shows that when the applied load is sufficiently large P_a has the value D-G. At this point the interface load becomes zero and the bolt load equals the applied load.

$$P_a = P_{as} = k_b\delta_{bs} + P_t , \tag{1.4}$$

where

$$\delta_{bs} = \delta_{ft} = P_t/k_f \tag{1.5}$$

so that

ESDU Copyright material. For current status contact ESDU.

Documents
Document Sharing Hub

Full document details: ESDU 85021 C-R1 2012

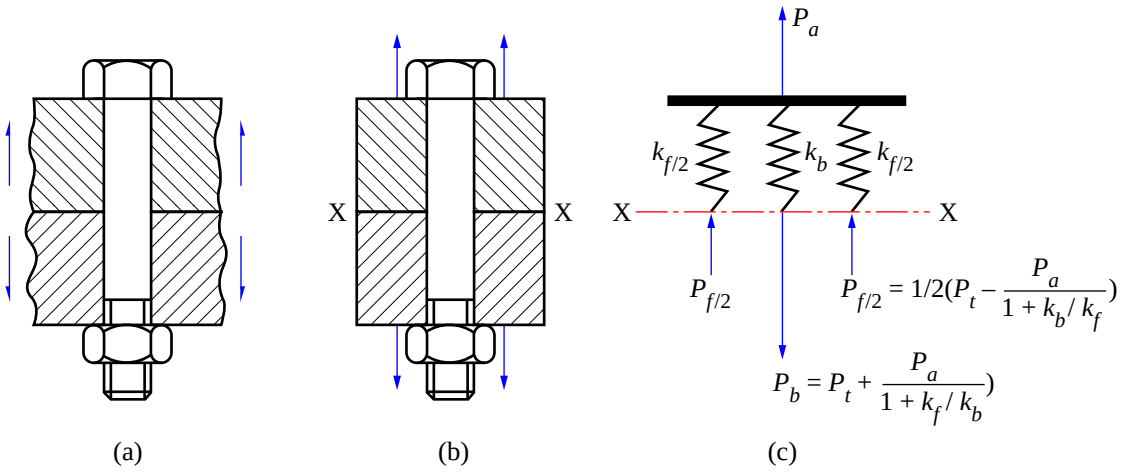

Sketch 1.2 Idealised joint

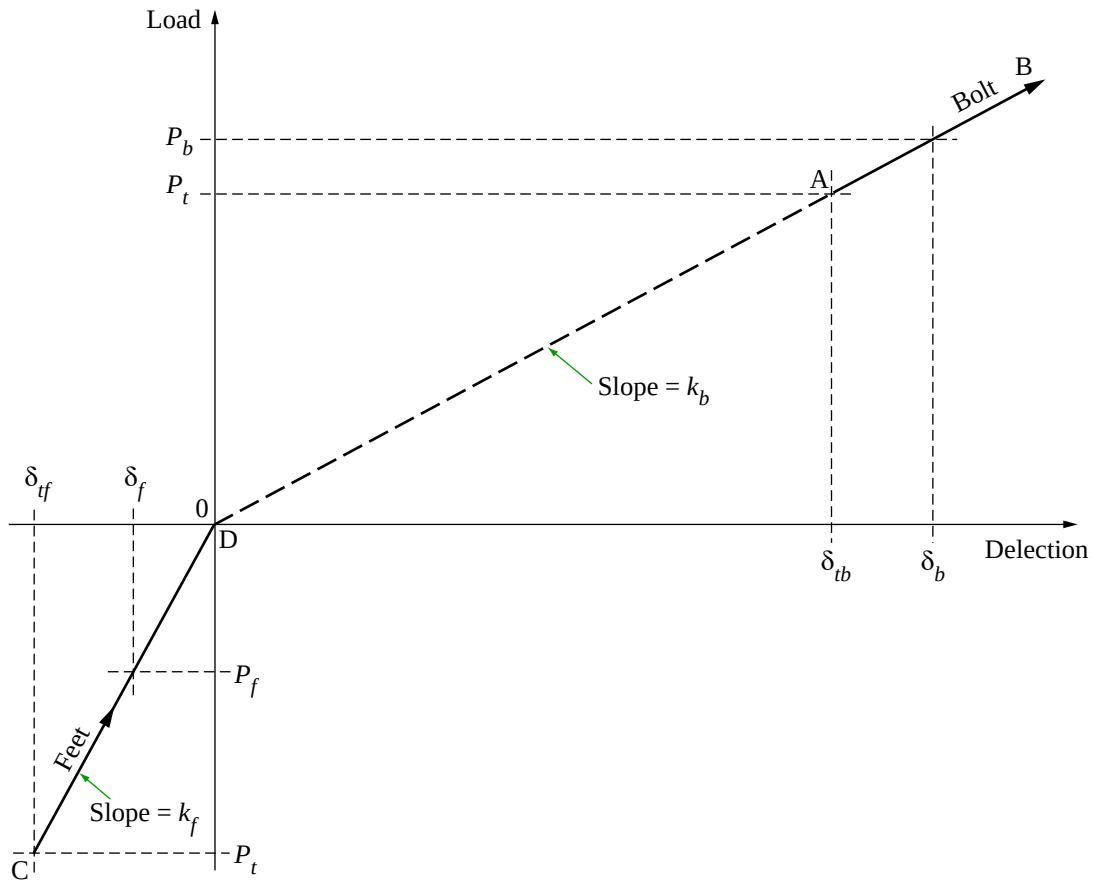

Sketch 1.3 Load deflection plot for idealised joint of Sketch 1.2c. (Tensile loads and deflections positive, compressive loads and deflections negative)

ESDU Copyright material. For current status contact ESDU.
Documents
Document Sharing Hub
Full document details: ESDU 85021 C-R1 2012

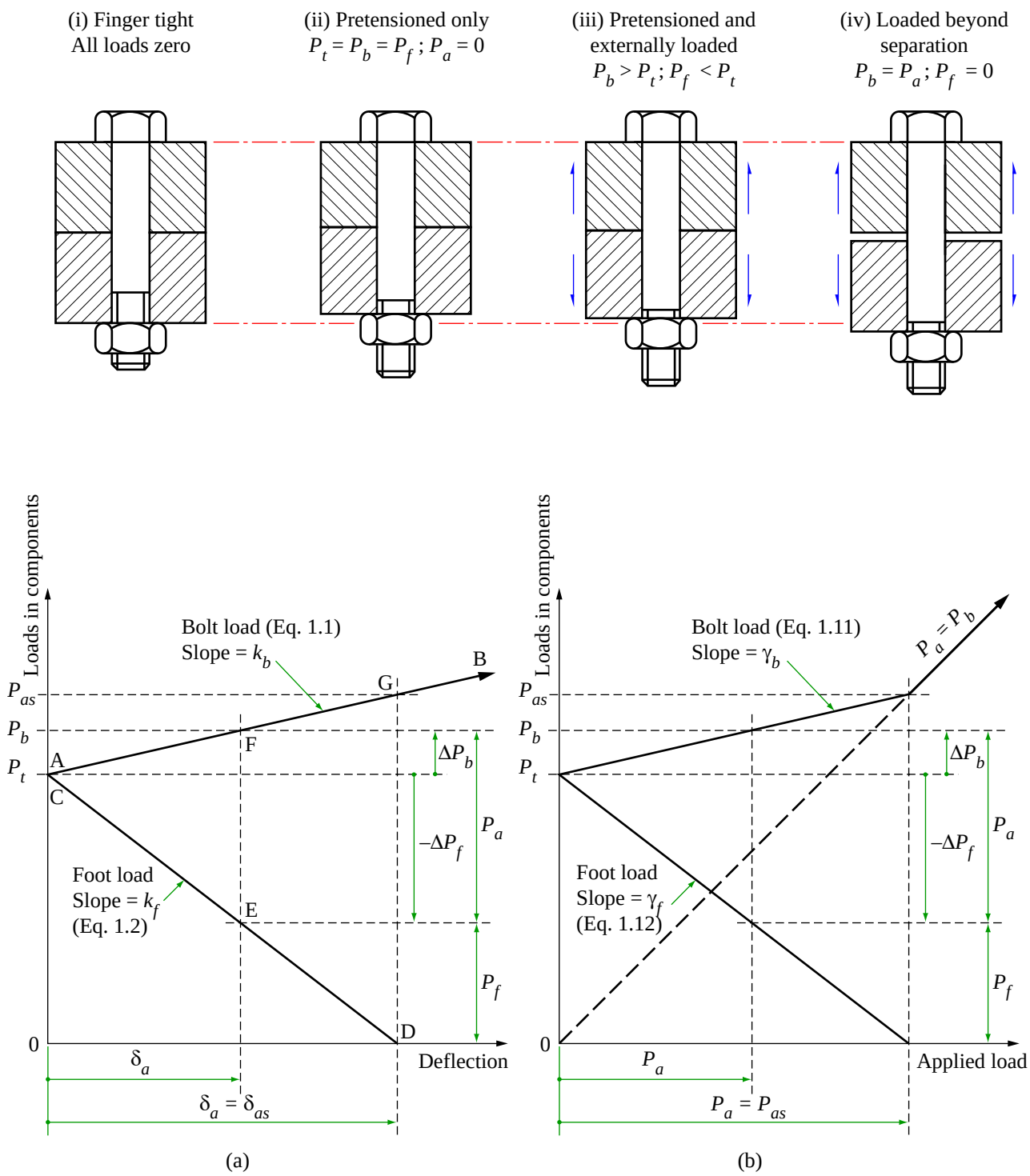

Sketch 1.4 Axisymmetrically loaded idealised pretensioned joints

ESDU Copyright material. For current status contact ESDU.
Documents
Document Sharing Hub
Full document details: ESDU 85021 C-R1 2012

$$P_{as} = P_t(k_b/k_f + 1) . \tag{1.6}$$

Beyond P_{as} the bolt load still equals the applied load, thus,

$$\left.\begin{aligned} P_b &= P_a \\ P_f &= 0 \end{aligned}\right\} \text{where } P_a > P_{as} . \tag{1.7}$$

This change in behaviour at $P_a = P_s$ is accompanied by a change in the total joint stiffness K. Thus,

$$\left.\begin{aligned} K &= k_b + k_f && \text{for } P_a < P_{as} \\ \text{and} \qquad & && \\ K &= k_b && \text{for } P_a > P_{as} . \end{aligned}\right\} \tag{1.8}$$

The diagram of Sketch 1.4b is similar to that of Sketch 1.4a but with the abscissa representing the applied load. Diagrams of this type are usually more convenient for design since, as will be shown in later sections, they can illustrate the effect of prising action. Because the applied load is plotted in both the ordinate and abscissa, a line of unit slope represents the case where all the load is taken by the bolt. For this diagram the slopes of the lines, γ_b and γ_f, are given by the simple equations

$$\left.\begin{aligned} \gamma_b &= 1/(1 + k_f/k_b) \\ \text{and} \qquad & \\ \gamma_f &= 1/(1 + k_b/k_f) . \end{aligned}\right\} \tag{1.9}$$

From which it follows that

$$\gamma_b + \gamma_f = 1$$

and that Equation (1.6) may be expressed as

$$P_{as} = P_t/\gamma_f . \tag{1.10}$$

Also, the bolt load before separation is simply given as

$$P_b = P_t + P_a\gamma_b = P_t + P_a[1/(1 + k_f/k_b)] \tag{1.11}$$

and after separation $P_b = P_a$.

The load in the feet is given, from Equation (1.3), as

$$P_f = P_b - P_a = P_t + P_a\gamma_b - P_a = P_t - \gamma_f P_a = P_t - P_a[1/(1 + k_b/k_f)] . \tag{1.12}$$

ESDU Copyright material. For current status contact ESDU.

Documents
Document Sharing Hub

Full document details: ESDU 85021 C-R1 2012

Thus the assembly pretension associated with bolt yield is given by

$$P_{ty} = P_y - \gamma_b P_a \,. \tag{1.13}$$

Note that γ_b, γ_f, k_b and k_f are all positive quantities but that γ_f has negative slope, as does k_f on Sketch 1.4.

The simple Equations (1.1) to (1.12) can be applied to more complex arrangements of axisymmetric joints provided that the stiffnesses k_b and k_f include the appropriate elements. This is described in detail in Section 1.4.

1.4 Load Path Through Practical Joints

The vast majority of joints have loads offset from the bolt centre-line. In a typical joint with relatively thin feet, the load exerts a prising action, see Sketches 1.5a and 1.5b. In such joints each foot may be treated as a beam of length g and thickness h_{f1} (or h_{f2}) and the separation under the bolt estimated. In joints with very thick feet, $(h_{f1} + h_{f2}) > g$, see Sketch 1.8, separation at the heel may be estimated by treating the combined feet as a beam of length $(h_{f1} + h_{f2})$ and thickness g. Thus, the two methods differ in their calculation of foot stiffness and hence in the calculation of the separation load and provide the separation load for different locations. However, the calculation of bolt yielding depends only on bolt stiffness and is therefore independent of feet thickness.

There is no set geometry at which one analysis takes over from the other. In any particular case in which the total feet thickness $(h_{f1} + h_{f2})$ is close to g the location of the effective hinge point (see Section 1.5.1) can control which analysis gives the lowest pretension for bolt yield and/or separation. In such cases both analyses should be carried out.

Calculations of the separation load using the two methods described above are identified separately in the following sections. It is important to note that some of the geometric properties and stiffnesses described are relevant to both methods and that others are particular to only one of the methods.

1.5 LOAD PATHS THROUGH JOINTS WITH THIN FEET

In a typical bolted joint with thin feet, an offset load exerts a prising action, as shown in Sketches 1.5a and 1.5b, that bends the feet and increases the load on the bolt. This can lead to partial separation in the region under the bolt head that further loads the bolt. By taking moments for the joint shown in Sketch 1.5a, the following simplified relationship between the bolt load, P_b, the reaction R at the effective hinge point Q and the applied load, P_a, are obtained.

$$P_b = P_a(1 + b/a) \tag{1.14}$$

and

$$R = P_a(b/a) \,. \tag{1.15}$$

These equations represent the limiting case where the load is sufficiently high to cause separation under the bolt and the joint interface pressure becomes a point or line contact at Q. A line representing Equations (1.14) and (1.15) can be superimposed on Sketch 1.4b type diagrams. This is illustrated in the diagram of Sketch 1.5a which shows that the line for P_b rises linearly, as in Sketch 1.4b, then meets the line of Equation (1.14). The feet load line, for the region immediately under the bolt, falls linearly from P_t and then, when the prising action causes separation, the reaction is transferred to Q at the toe and the load under the bolt drops to zero. Sketch 1.5a shows an applied load in the region where the prising action

ESDU Copyright material. For current status contact ESDU.
Documents
Document Sharing Hub
Full document details: ESDU 85021 C-R1 2012

has caused separation. Increasing the pretension delays separation until a higher load is applied. This is true whether or not prising action is present. From Equation (1.14) it follows that it is desirable to minimise b/a since this reduces P_b and also increases the load at which separation occurs, see Sketch 1.5a.

1.5.1 Analysis of practical joints with thin feet

Diagrams of the type shown in Sketches 1.5 can be used to investigate and improve the design of practical joints. Their application to practical joints is complicated primarily by lack of knowledge of two interlinked factors. These are the value of dimension a and the effective areas of the feet. These two parameters are interlinked because prising action causes separation to commence at the heel first and this reduces the effective area of the feet (see Sections 1.14.1 and 1.14.6).

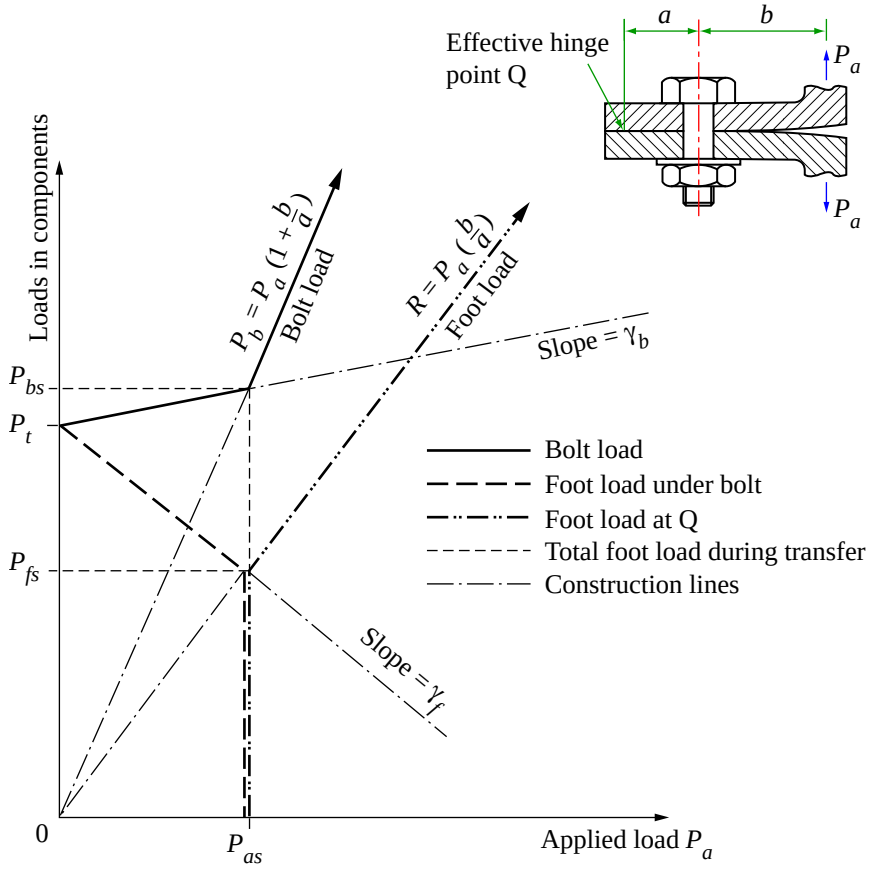

Sketch 1.5a Simplified prising action (joints with thin feet)

ESDU Copyright material. For current status contact ESDU.
Documents
Document Sharing Hub
Full document details: ESDU 85021 C-R1 2012

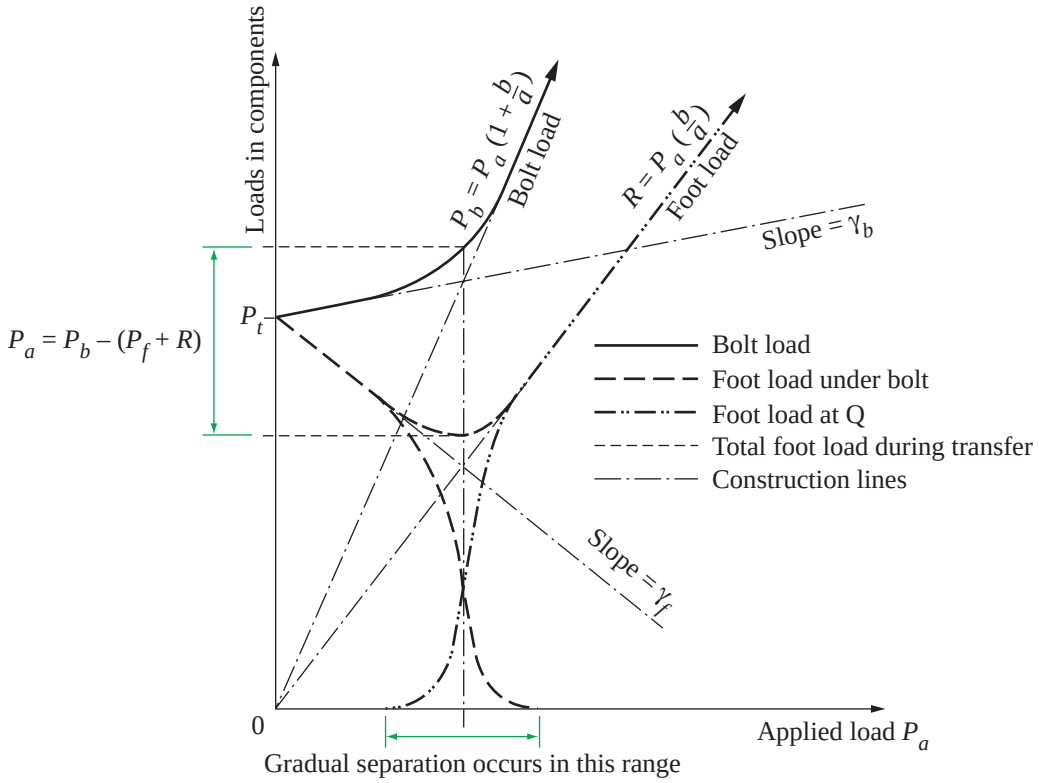

Sketch 1.5b Actual prising action (joints with thin feet)

Because of this action, separation is a gradual process that modifies the curves of Sketch 1.5a as shown in Sketch 1.5b. Throughout the region of gradual separation the bolt is subject to increasing bending. After separation under the bolt has occurred, the bolt is subject to further bending which increases with increasing load. The bending stresses generated are additional to the direct stresses in the bolt and can contribute significantly to its yielding and ultimate failure.

1.6 Estimation of Stiffnesses k_b and k_f

In order to construct diagrams of the type illustrated in Sketches 1.5a and 1.5b for joints with thin feet or to analyse joints with thick feet it is necessary to estimate k_b and k_f . In their simplest form for axisymmetrically loaded joints these are given by

$$\left.\begin{aligned} k_b &= E_b A_b / l_b' \\ \text{and} \qquad k_f &= E_f A_f / h_f' \,. \end{aligned}\right\} \tag{1.16}$$

Where the stiffness of part of a joint assembly is determined by idealising it into several (n) separate stiffnesses these are combined into one stiffness using the following relationship,

$$k^{-1} = k_1^{-1} + k_2^{-1} \,.....\, k_n^{-1} \,. \tag{1.17}$$

ESDU Copyright material. For current status contact ESDU.
Documents
Document Sharing Hub
Full document details: ESDU 85021 C-R1 2012

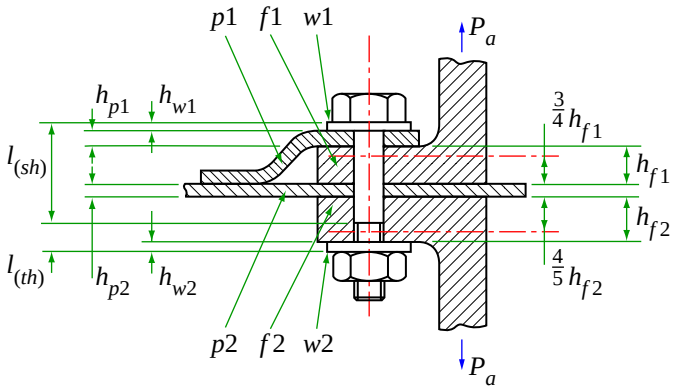

Sketch 1.6 Joint with a plate that acts with the feet and a plate that acts with the bolt

In practice the calculation of k_b and k_f must take careful account of those parts of the assembly that are acting with the bolt and those parts acting with the feet. The nut and bolt head and their associated washers and locking washers act with the bolt. Also, any additional unloaded plates sandwiched between either the nut or bolt head and the loaded feet act with the bolt, whereas unloaded plates sandwiched between the feet act with the feet. Since the load enters the joint via the loaded feet, that portion of the load that goes to increase the bolt load causes increased compression in the small layer of foot material immediately under the bolt head. Such layers of the feet therefore also act with the bolt. This is illustrated in the following equations for k_f and k_b which relate to the joint of Sketch 1.6. In this, the load is assumed to act in the feet at layers that are at distances $(3/4)h_{f1}$* and $(4/5)h_{f2}$* from their innermost surfaces. Thus,

$$\left.\begin{aligned} k_f^{-1} &= [k_{f1(h=(3/4)hf1)}]^{-1} + [k_{f2(h=(4/5)hf2)}]^{-1} + k_{p2}^{-1} \\ \text{and} \qquad k_b^{-1} &= k_{b(th)}^{-1} + k_{b(sh)}^{-1} + k_{w1}^{-1} + k_{w2}^{-1} + k_{p1}^{-1} \\ &\quad + [k_{f1(h=(1/4)hf1)}]^{-1} + [k_{f2(h=(1/5)hf2)}]^{-1} . \end{aligned}\right\} \qquad (1.18)$$

1.6.1 Estimation of bolt stiffness k_b (joints with thick or thin feet)

The bolt stiffness can be estimated from the stiffness of the plain shank, the loaded threaded portion of the shank, the load-transmitting threads, the nut and bolt head, associated washers, and regions of the feet that act with the bolt. For the purposes of the computation these have been separated into the following elements.

(a) The bolt head.
(b) The bolt shank.
(c) That part of the threaded portion of the bolt between the nut face and the plain shank.
(d) That part of the bolt thread engaged with the nut.
(e) The nut body.
(f) Washers.

Note that when calculating γ_b for bolts subject to fatigue Section 1.13 recommends that γ_b should be overestimated rather than underestimated.

* These factors are quoted to illustrate that different portions of h_f can be effective for each foot in a joint. These values are typical for the geometries illustrated in Sketch 1.6; they are not recommended values for all joints.

ESDU Copyright material. For current status contact ESDU.
Documents
Document Sharing Hub
Full document details: ESDU 85021 C-R1 2012

1.6.1.1 The bolt head and the shank

The stiffness of the bolt head and the diffusion of the load into it from the shank are represented by an increase in the bolt shank length over its actual length. The increase in shank length is expressed as a coefficient $x_{(sh)}$, which is used in the calculation or input into the program, and which is applied to the bolt head thickness h_b. Thus, the effective shank length is given by:

$$l'_{(sh)} = l_{(sh)} + x_{(sh)} \times h_b. \tag{1.19}$$

Typically the load in the shank is diffused into the bolt head over a short distance and the influence of this can be allowed for in $k_{b(sh)}$ by extending $l_{(sh)}$ by 10 or 15 percent of the shank diameter. The stiffness of the standard bolt head can also be allowed for in $k_{b(sh)}$ by adding a further extension to $l_{(sh)}$ of about 15 to 20 per cent of the head thickness. In the case of special bolt heads this should be adjusted appropriately. For thicker than standard bold heads the allowance reduces to a value below that for the standard bolt.

1.6.1.2 Bolt thread area

The area of the threaded portion of the bolt is treated as having an effective diameter that is larger than the core diameter to account for the influence of the threads. The increase over the core diameter is expressed as a coefficient, $x_{(th)}$, which is used in the calculation or input into the program, and which is applied to the depth of the threads. The effective diameter used in the calculation of the threaded portion of the bolt is thus:

$$d'_{(th)} = d_{core} + x_{(th)} \times (d_{(th)} - d_{core}) . \tag{1.20}$$

Typically $x_{(th)}$ is about 0.3.

1.6.1.3 Load transfer to the nut and nut stiffness

The threads transferring load between the bolt and nut deform elastically and so contribute to the flexibility of the bolt assembly. To allow for this the length of the threaded portion of the bolt is taken to extend into the threads engaged with the nut. The extension beyond the nut face into the nut is expressed as a coefficient, $x_{(pt)}$, which is used in the calculation or input into the program, and which is applied to the thread pitch, p. The value $x_{(pt)} \times p$ is the distance into the nut from the nut face at which half of the load has been transferred from the bolt to the nut.

The nut body also deforms elastically and contributes to the flexibility of the bolt assembly. Nut flexibility is allowed for by further increasing the length of the threaded portion of the bolt. This extension is expressed as a coefficient, $x_{(nu)}$, which is used in the calculation or input into the program, and which is applied to the nominal diameter of the bolt, d_b. Thus, the total effective length of bolt thread is:

$$l'_{(th)} = l_{(th)} + x_{(pt)} \times p + x_{(nu)} \times d_b . \tag{1.21}$$

Note that the effective length $l'_{(th)}$ is used together with $d'_{(th)}$ when calculating the stiffness of the threaded portion of the bolt and the nut.

A few limited tests have been conducted that indicate that the combined effect of $x_{(pt)}$ and $x_{(nu)}$ is equivalent to the extension of $l_{(th)}$ by about $1\frac{1}{2} d_b$ to $3 d_b$. It follows that when $l_{(th)}$ plus $l_{(sh)}$ is small in relation to d_b, the deflection of the load transmitting threads dominates k_b. The factor of 3 is more likely to apply to the softer nut and bolt materials with coarse wide tolerance threads. The factor of 1½ is more likely to apply to high strength materials and fine close tolerance threads.

ESDU Copyright material. For current status contact ESDU.

Documents
Document Sharing Hub

Full document details: ESDU 85021 C-R1 2012

The value of $x_{(pt)}$ is a function of nut design and can vary as indicated in Table 1.1. There are many proprietary nut designs available and the likely distribution of the load along the engaged threads should be estimated in each case. Note that in many self locking nuts some of the engaged thread may not be carrying a significant fraction of the load and such portions of the thread therefore make no contribution to $l_{(th)}$.

TABLE 1.1 ALLOWANCE FOR LOADED THREADS WITHIN THE NUT

Example of nut design	*Distribution of load along engaged threads*	*Suggested value of* $x_{(pt)}$
Standard nut	Load taken mainly on first 1 or 2 complete thread pitches.	One complete thread pitch, $x_{(pt)} = 1$. (The minimum allowance.)
Special thin-walled nut	Load taken approximately uniformly over all engaged threads. (This is rarely achieved in practice.)	Number of pitches equal to half the total length of the engaged threads. (This is the theoretical maximum additional and is rarely achieved in practice.)

Where the above guidance on values for $x_{(pt)}$ and $x_{(nu)}$ is not sufficient, and particularly in short bolts, it is recommended that extreme values should be used and their influence on the computation determined.

1.6.1.4 Washers

All washers and pad washers, on either the nut or head end, work with the bolt through an effective diameter c and their stiffnesses should be determined. The effective diameter for a standard case is about the mean of the across-corners and across-flats dimensions of the nut or bolt hexagon.

1.6.2 Estimation of stiffness k_f for thin feet

This is carried out using Equation (1.18). The value of A_f is required and the value of this is calculated in the same way for both thick and thin feet as set out in Section 1.6.3.

In joints where gaskets are placed between the plates the stiffness of the gasket must be included in the calculation of k_f. This can only be done if the gasket material remains elastic throughout and if the gasket covers the full area of contact between the feet.

In the equations given in Sections 1.6.3 and 1.7 the hole accommodating the bolt is represented as being of the same diameter as the bolt. For most bolt holes this approximation produces negligible error. However, if a large clearance hole is used then the actual hole diameter should be used.

1.6.3 Estimation of effective area of feet (both thick and thin feet)

The estimation of k_f is complicated by uncertainty concerning the effective area, A_f. Close to the bolt head or nut, an area similar to the area underneath the nut or head is effective. If the feet are thick the load can diffuse out to involve a larger area in the centre of the feet, thus increasing k_f. Equation (1.22), taken from Derivation 2, may be used to calculate the effective area, A_f, when both feet have the same modulus and the value of c is the same at both ends of the bolt. The equation is empirical. Figure 1 gives curves of the left hand side of Equation (1.19) plotted against l'/c for various values of D_f/c for the case where $c/d_b = 1.5$.

ESDU Copyright material. For current status contact ESDU.
Documents
Document Sharing Hub
Full document details: ESDU 85021 C-R1 2012

$$\frac{A_f}{(\pi/4)[c^2 - d_b^2]} = 1 + \frac{0.5(D_f/c - 1)[l'/5c - (l'/10c)^2]}{1 - (d_b/c)^2}. \tag{1.22}$$

When c is not the same at both ends of the bolt an average value should be used. It is suggested that l' should be taken as the total actual distance between the bolt head and the nut.

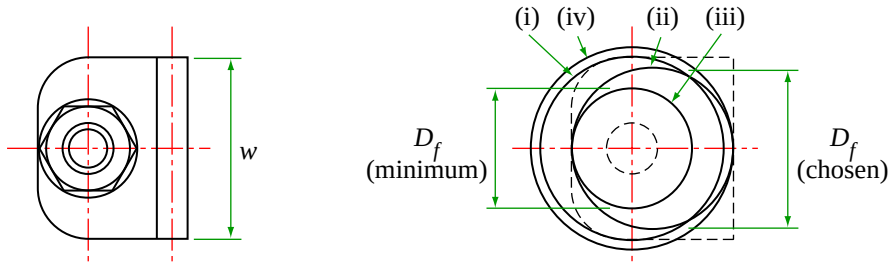

Plan of actual joint

Maximum and likely values of D_f

Sketch 1.7 Estimates of the effective area of the feet, D_f

To use Equation (1.22) the practical outside diameter of the feet, D_f, must be estimated using the following values.

(i) The width of the foot, w.
(ii) The distance from the heel to the toe, g.
(iii) Twice the distance to the toe from the bolt centre, $2(g - m)$.
(iv) Twice the distance to the heel from the bolt centre, $2m$.

In practice D_f is often taken to be rather more than the minimum of the four values of D_f listed above. (Sketch 1.7 and Examples 1.16.1 and 1.16.2 show estimates of D_f.) Sketch 1.24 shows that for thin feet the variation of D_f has a relatively small influence on the pretension required.

1.7 Analysis of Joints With Thick Feet

For bolt yielding the analysis of Section 1.3 may be applied to joints with thick feet $(h_{f1} + h_{f2}) > g$. However, separation is treated differently and deals only with separation at the heel, as described below.

If the sum of the thicknesses of the feet is significantly larger than their total effective length, g, the value of k_f may be estimated by treating the feet as a beam parallel to the bolt axis (Derivation 2). This is shown schematically in Sketch 1.8. It is assumed that the feet stresses and the interface pressures are everywhere compressive and the bolt flexural stiffness is neglected. In applying simple theory of bending it is assumed that the stresses and interface pressure vary linearly across the feet (see Sketch 1.8). From these assumptions it follows, using Equation (1.16)*, that P_a divided by the deflection of the foot at the bolt centre-line can give k_f as follows.

$$k_f = \frac{E_f A_f}{(\Sigma h_f)[1 - (A_f/I_f)(j - m + b)(m - j)]} \tag{1.23}$$

* If a calculated value of k_f is negative then the assumption of interface pressure being everywhere compressive is invalid and the analysis cannot be used. This is not likely to be the case in practical joints.

ESDU Copyright material. For current status contact ESDU.
Documents Document Sharing Hub
Full document details: ESDU 85021 C-R1 2012

where A_f is obtained as described in Section 1.6.3 and converted into a rectangular area, containing the bolt hole, of dimensions $g \times w'$. Thus, as g is known,

$$w' = (A_f + \pi d_b^2/4)/g \ . \tag{1.24}$$

The neutral axis of the area A_f (that is, area $g \times w'$ less the bolt hole area) fixes j and I_f, its second moment of area. Thus,

$$j = (w'g^2/2 - \pi d_b^2 m/4)/A_f \tag{1.25}$$

and

$$I_f = w'g^3\left[\frac{1}{3} - \frac{\pi d_b^2}{4w'g}\left\{\left(\frac{m}{g}\right)^2 + \left(\frac{d_b^2}{4g}\right)^2\right\}\right] - \frac{\pi^2 d_b^4 g^2}{4A_f}\left[\left(\frac{w'g}{\pi d_b^2}\right)^2 + \left(\frac{m}{2g}\right)^2 - \left(\frac{w'g}{\pi d_b^2}\right)\left(\frac{m}{g}\right)\right] . \tag{1.26}$$

This estimate of k_f is applied up to separation that occurs at one edge. This happens at a lower load than does separation under the bolt. It is conveniently expressed as

$$\frac{P_a}{P_t} \equiv \frac{P_{ahs}}{P_t} = \frac{I_f/A_f - (m-j)j}{\gamma_f\,[I_f/A_f - (m-j)j + bj]} \ . \tag{1.27}$$

Note that if $m = j$ the bolt centre-line and axis of bending coincide and Equation (1.27) reduces to

$$\frac{P_{ahs}}{P_t} = \frac{I_f/A_f}{(\gamma_f I_f/A_f) + bj} \ . \tag{1.28}$$

Figure 2 provides a graphical presentation of Equation (1.26) for rapid estimation of I_f. Figure 3 provides a graphical presentation of Equation (1.27). Note that $I_f/(A_f m^2)$ is the major parameter governing P_{ahs}/P_t.

ESDU Copyright material. For current status contact ESDU.

Documents
Document Sharing Hub

Full document details: ESDU 85021 C-R1 2012

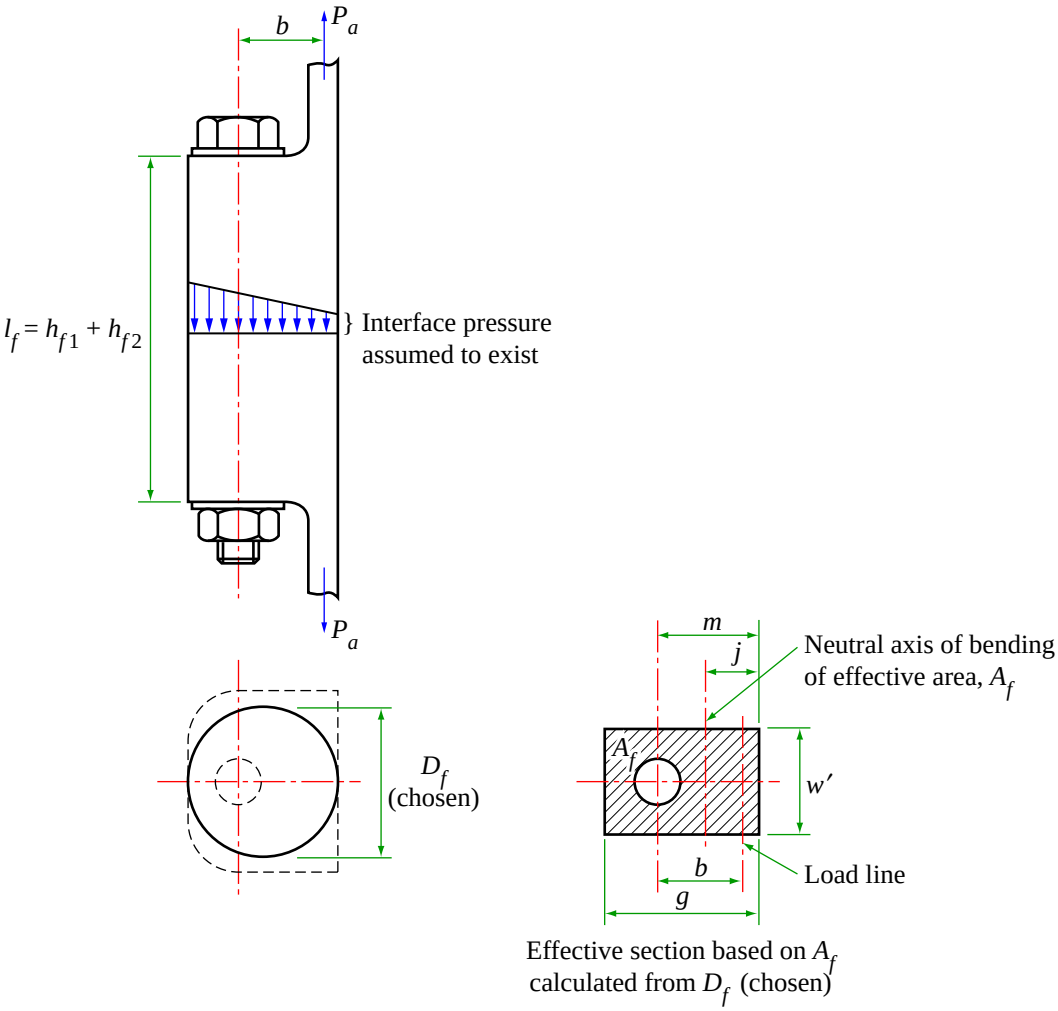

Sketch 1.8

1.8 Effect of Tolerances

The previous statements regarding calculation of k_f and k_b relate to joints in which all the mating surfaces are perfectly flat and parallel. In practice, manufacturing tolerances will cause the bolt head and nut seatings to be slightly out of parallel leading to some bending of the bolt. ESDU 67034* provides a method of estimating the effect of inclined nut seatings on the fatigue strength of the bolt thread. Note also that if the surface of a component is curved it can alter the stiffness of the bolt thread. Note also that if the surface of a component is curved it can alter the stiffness of the foot or bolt that it acts with.

* ESDU 67034 "Effect of inclined nut seatings on the fatigue strength of screw threads (tentative)". (In Stress and Strength Series.)

ESDU Copyright material. For current status contact ESDU.
Documents Document Sharing Hub
Full document details: ESDU 85021 C-R1 2012

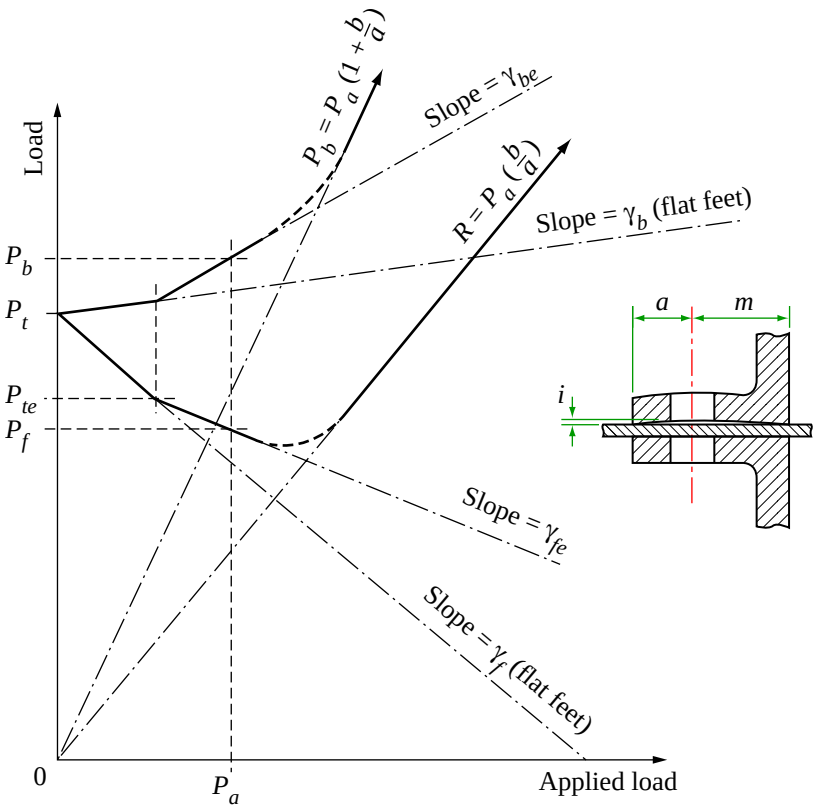

Sketch 1.9 Illustration of thin arched foot and the change to γ_{fe} and γ_{be}

1.8.1 Effect of curved or wavy surfaces in joints with thin feet

The manufacturing tolerances may be such as to allow the components to have slightly curved or waved surfaces. Where such surfaces are not pressed flat by the pretension, and/or subsequent loading, they can modify the values of k_f and/or k_b. Sketch 1.8 shows the extreme case of a relatively thin arched foot. The bolt pretension necessary to flatten the foot is

$$P_{te} = \frac{E_f h_f^3 w(a + m)i}{4a^2m^2} . \tag{1.29}$$

Normally P_{te} is less than P_t but, on applying load, the value of P_t can fall below P_{te}, in which case the spring stiffness of the arched foot is introduced into k_f. The spring stiffness of the foot is given by

$$k_{fe} = \frac{E_f h_f^3 w(a + m)}{4a^2m^2} , \tag{1.30}$$

which is combined with the stiffnesses described in Section 1.6, using Equation (1.17), to give a reduced k_f. Hence, from Equations (1.9), γ_b is increased and γ_f decreased when P_f falls below P_{te}. Sketch 1.9 shows how this modifies Sketches 1.5a and 1.5b for cases where P_{te} is only just below P_t.

ESDU Copyright material. For current status contact ESDU.
Documents
Document Sharing Hub
Full document details: ESDU 85021 C-R1 2012