ESDU Copyright material. For current status contact ESDU.

ESDU 85037

Issued December 1985
With Amendments A and D
June 1992
Re-issued August 2011

Natural frequencies of simply-supported sandwich panels with laminated face plates

Associated software: ESDUpac A8537

Endorsed by
The Royal Aeronautical Society

Documents
Document Sharing Hub

ESDU DATA ITEMS

Data Items provide validated information in engineering design and analysis for use by, or under the supervision of, professionally qualified engineers. The data are founded on an evaluation of all the relevant information, both published and unpublished, and are invariably supported by original work of ESDU staff engineers or consultants. The whole process is subject to independent review for which crucial support is provided by industrial companies, government research laboratories, universities and others from around the world through the participation of some of their leading experts on ESDU Technical Committees. This process ensures that the results of much valuable work (theoretical, experimental and operational), which may not be widely available or in a readily usable form, can be communicated concisely and accurately to the engineering community.

We are constantly striving to develop new work and review data already issued. Any comments arising out of your use of our data, or any suggestions for new topics or information that might lead to improvements, will help us to provide a better service.

THE PREPARATION OF THIS DATA ITEM

The work on this particular Item was monitored and guided by the Acoustic Fatigue Panel which had the following membership:

Chairman		
Mr J.A. Hay	—	British Aerospace plc, Weybridge Division, Weybridge
Members		
Dr R.D. Adams	—	University of Bristol
Mr B.P. Broadley	—	Rolls-Royce Ltd, Derby
Dr D.J. Cottney		Short Brothers plc, Belfast
Mr R.J. Cummins	—	British Aerospace plc, Civil Aircraft Division, Bristol
Mr D.C.G. Eaton*	—	The European Space Research and Technology Centre, Domeinweg, The Netherlands
Mr D. Sims	—	British Aerospace plc, Air Weapons Division, Hatfield
Prof. R.G. White	—	Institute of Sound and Vibration Research, University of Southampton.

* Corresponding Member

The Item was accepted for inclusion in the Acoustic Fatigue series by the Vibration and Structural Dynamics Steering Group which first met in July 1976 and now has the following membership:

Chairman		
Mr D.C.G. Eaton	—	The European Space Research and Technology Centre, Domeinweg, The Netherlands
Members		
Mr T.V. Lawson	—	University of Bristol
Dr M.R. Smith	—	University of Newcastle-upon-Tyne
Dr H.H.B.M. Thomas	—	Independent.

The work on this Item was carried out in the Noise and Structural Dynamics Group of ESDU. The member of staff who undertook the technical work involved in the initial assessment of the available information and the construction and subsequent development of the Item was

Mr R.F. Lambert	—	Group Head.

ESDU Copyright material. For current status contact ESDU.

Documents
Document Sharing Hub

Full document details: ESDU 85037 D-R1 2011

NATURAL FREQUENCIES OF SIMPLY-SUPPORTED SANDWICH PANELS WITH LAMINATED FACE PLATES

CONTENTS

		Page
1.	NOTATION AND UNITS	1
2.	NOTES	3
2.1	General	3
2.2	Method of Analysis	3
2.3	Effective Panel Dimensions	4
2.4	Core Shear Stiffnesses	4
2.5	Mode Numbers	4
2.6	Accuracy and Limitations of Data	5
3.	COMPUTATION OF NATURAL FREQUENCIES AND MODE SHAPES	5
3.1	Data Input	6
3.1.1	General	6
3.1.2	Face plate elastic properties	6
3.1.3	Data for evaluation of face plate elastic properties	6
3.1.4	Core and adhesive layer properties	7
3.1.5	Panel size and case data	8
3.1.6	Change of angle θ	8
3.2	Data Output	8
4.	DERIVATION AND REFERENCES	9
4.1	Derivation	9
4.2	References	9
5.	EXAMPLE	10
	FIGURE	16

ESDU Copyright material. For current status contact ESDU.

Documents
Document Sharing Hub
Full document details: ESDU 85037 D-R1 2011

NATURAL FREQUENCIES OF SIMPLY-SUPPORTED SANDWICH PANELS WITH LAMINATED FACE PLATES

1. NOTATION AND UNITS

		SI	*British*
a	effective length of panel in x-direction (see Section 2.3)	m	in
b	effective length of panel in y-direction, or arc length of curved panel	m	in
E_x, E_y	face plate moduli of elasticity in x, y-directions, respectively	N/m^2	lbf/in^2
E_α, E_β	lamina modulus of elasticity in α-, β-directions respectively	N/m^2	lbf/in^2
G_{xz}, G_{yz}	shear stiffnesses of core in (x, z) and (y, z) directions, respectively (see Section 2.4)	N/m^2	lbf/in^2
G_{yx}	shear stiffness of face plate in (x, y) direction	N/m^2	lbf/in^2
$G_{\alpha\beta}$	shear stiffness of lamina in (α, β) direction	N/m^2	lbf/in^2
h	panel thickness (see Sketch 2.1)	m	in
i	square root of –1		
k	multiplying factor (see Section 2.3)		
m	mode number in x-direction (see Section 2.5)		
N	number of layers in face plate		
n	mode number in y-direction (see Section 2.5)		
R	internal radius of curvature	m	in
t	time	s	s
u, v, w	displacements in x-, y- and z-directions, respectively (see Sketch 1.1)	m	in
u_{mn}, v_{mn}, w_{mn}	modal amplitude parameters [see Equations (2.1) to (2.3)]	m	in
x, y, z	panel coordinate system with x- and y-axes aligned with face plate principal axes of orthotropy (see Sketch 1.1)		
α, β	lamina coordinates aligned with principal axes of orthotropy of lamina (see Sketch 1.1)		

Issued December 1985
With Amendment D
Re-issued August 2011 – 16 pages

ESDU Copyright material. For current status contact ESDU.
Documents
Document Sharing Hub
Full document details: ESDU 85037 D-R1 2011

θ	angle of principal axis of orthotropy, α, of lamina measured from panel principal axis, x (see Sketch 1.1)	deg	deg
λ_m, λ_n	wave numbers [defined by Equations (2.6) and (2.7), respectively]		
ν_{xy}	Poisson's ratio* for face plate resulting from load applied in x-direction		
ν_{yz}	Poisson's ratio* for face plate resulting from load applied in y-direction		
$\nu_{\alpha\beta}$	Poisson's ratio* for lamina resulting from load applied in α-direction		
ϕ, ψ	cross-sectional rotations	rad	rad
ϕ_{mn}, ψ_{mn}	modal rotational amplitude parameters [see Equations (2.4) and (2.5)]	rad	rad
ω	circular natural frequency	rad/s	rad/s

*In some previous Items on this series, Poisson's ratio has been designated σ.

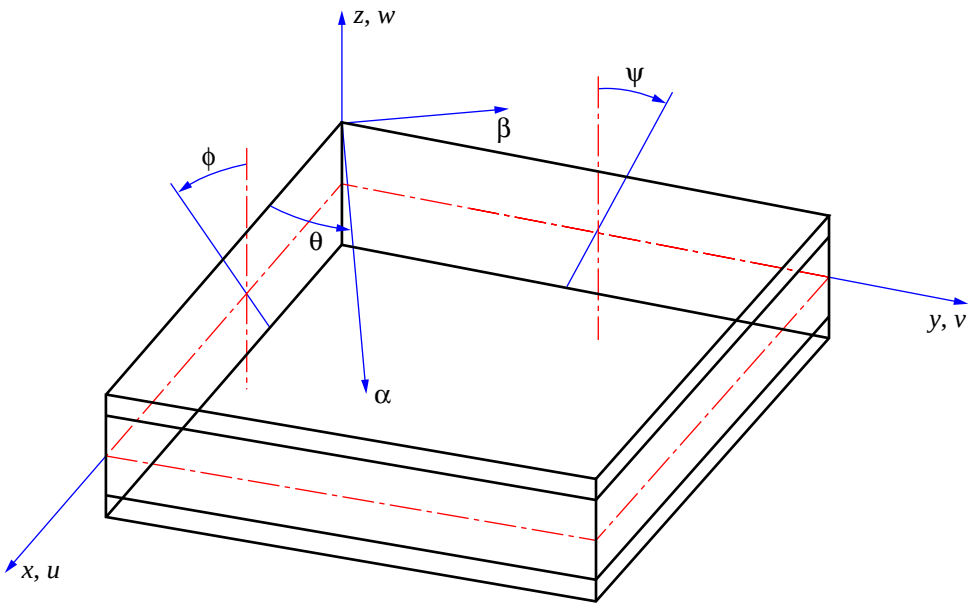

Sketch 1.1 Coordinate systems and positive components of displacements

ESDU Copyright material. For current status contact ESDU.
Documents
Document Sharing Hub
Full document details: ESDU 85037 D-R1 2011

2. NOTES

2.1 General

This Data Item provides a means of estimating the natural frequencies of initially unstressed flat, or singly-curved, rectangular sandwich panels having laminated face plates. These data are particularly applicable to sandwich panels having laminated fibre-reinforced face plates. Because of the large number of lay-up configurations that may be used for the laminated face plates, it is not practical to provide natural frequency data in graphical form. A program, ESDUpac A8537, is therefore provided with example input and output files. For sandwich panels having isotropic face plates of equal thickness, natural frequencies may be estimated using the graphical procedure provided in ESDU 72016*.

The program in this Item allows the estimation of the natural frequencies of sandwich panels having orthotropic face plates that may be of different materials and thicknesses. The principal axes of orthotropy of the face plates must be parallel to the panel sides. The cores are assumed to have zero flexural stiffness. The panels are assumed to be simply-supported on all boundaries and may be singly-curved with shallow curvature. In practical applications simply-supported boundary conditions are seldom achieved so that effective dimensions are used to estimate panel natural frequencies (see Section 2.3).

The program allows the estimation of natural frequencies for the lower frequency modes of vibration. It should be noted that the natural frequency required for estimating the response under random acoustic loading, using ESDU 86024†, is the fundamental mode ($m = n = 1$) which has a predominant displacement normal to the plane of the panel.

2.2 Method of Analysis

The method of analysis is based on that given in Derivation 3 and is applicable to shallow cylindrical curved sandwich panels having thin face plates. It is assumed that bending is carried only by the face plates and transverse shear stresses only by the core. It is further assumed that normals to the undeformed neutral plane remain straight lines but not necessarily normal to the deformed neutral plane, and the transverse deflections do not vary through the thickness.

In the analysis, the face plates and core are treated as orthotropic materials. For fibre-reinforced face plates, the "apparent" elastic properties, as estimated using ESDU 83035‡, are used in the analysis (these properties may also be evaluated using the program).

The sandwich panel is assumed to be simply-supported at all edges and a solution to the equations of motion is obtained using the following relationships.

$$u = u_{mn}\cos(\lambda_m x)\sin(\lambda_n y)e^{i\omega t}, \tag{2.1}$$

$$v = v_{mn}\sin(\lambda_m x)\cos(\lambda_n y)e^{i\omega t}, \tag{2.2}$$

$$w = w_{mn}\sin(\lambda_m x)\sin(\lambda_n y)e^{i\omega t}, \tag{2.3}$$

$$\phi = \phi_{mn}\cos(\lambda_m x)\sin(\lambda_n y)e^{i\omega t}, \tag{2.4}$$

* Natural frequencies of flat or singly-curved sandwich panels with cores of zero flexural stiffness.
† Estimation of r.m.s. strain in laminated face plates of simply-supported sandwich panels subjected to random acoustic loading. Including a simplified natural frequency prediction method.
‡ Estimation of stiffnesses and apparent elastic properties of laminated flat plates.

ESDU Copyright material. For current status contact ESDU.
Documents Document Sharing Hub
Full document details: ESDU 85037 D-R1 2011

and $$\psi = \psi_{mn} \sin(\lambda_m x) \cos(\lambda_n y) e^{i\omega t}, \tag{2.5}$$

where $$\lambda_m = \frac{m\pi}{a}, \tag{2.6}$$

and $$\lambda_n = \frac{n\pi}{b}. \tag{2.7}$$

The substitution of the relationships given in Equations (2.1) to (2.5) into the equations of motion leads to the frequency equation. Expressing the frequency equation in matrix notation yields a 5 × 5 determinant that is equated to zero to obtain the required natural frequencies.

2.3 Effective Panel Dimensions

In the theory in this Item, it is assumed that panels are simply-supported on all boundaries. This edge condition is rarely achieved in practical applications. To account for practical edge conditions it is necessary to use effective panel dimensions as shown in Sketch 2.1. The value of the multiplying factor, k, is a function of both the edge fixings and the stiffness of the support frames. Limited experimental evidence suggests that for honeycomb sandwich panels with edges clamped to a "rigid" frame a value of $k = 4.5$ is appropriate, and for honeycomb panels bolted onto a stiff frame $k = 0$. For panels for which this Item is applicable (see Section 2.6), it is expected that the value of k will lie between 0 and about 5.

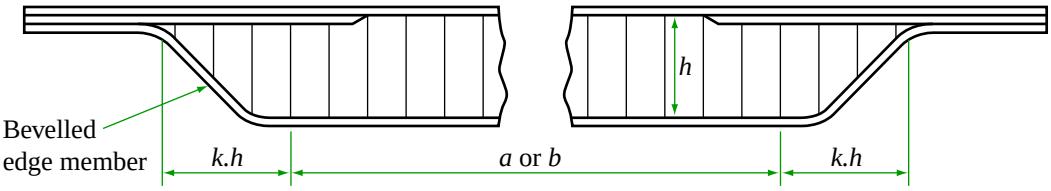

Sketch 2.1 Effective panel dimensions

2.4 Core Shear Stiffnesses

The core shear stiffnesses in the (x, z) and (y, z) directions, G_{xz} and G_{yz}, respectively, are often taken to be the core shear moduli which may be obtained from manufacturers' data or from tests. A suitable test method is described in ESDU 66025 (Reference 8). For hexagonal honeycomb cores, the core shear moduli may be estimated using ESDU 67022 (Reference 9). Any extension and compression of the bevelled edge member* (see Sketch 2.1) that may occur in the asymmetric panel bending modes can induce a shear angle within the sandwich core that increases its stiffness. A method of estimating the effective core shear stiffness, resulting from the bevelled edge member extensional displacement, is given in Derivation 7. In the fundamental bending mode, in which there is little core shear, varying the core shear stiffness has a relatively small effect on the estimated natural frequency.

2.5 Mode Numbers

For simply-supported panels, the mode numbers m and n are the number of half waves across the panel in the x- and y-direction, respectively. This definition is consistent with the definition, in terms of nodal lines, used in other Items in the series.

* The bevelled edge member is sometimes referred to as the pan.

ESDU Copyright material. For current status contact ESDU.
Documents
Document Sharing Hub
Full document details: ESDU 85037 D-R1 2011