ESDU 88023

Issued November 1988
With Amendments A and B
March 1992
Re-issued November 2012

Jet-by-jet shielding of noise

Associated software: ESDUpac A8823

Endorsed by
The Royal Aeronautical Society

ESDU Copyright material. For current status contact ESDU.

Documents
Document Sharing Hub

ESDU DATA ITEMS

Data Items provide validated information in engineering design and analysis for use by, or under the supervision of, professionally qualified engineers. The data are founded on an evaluation of all the relevant information, both published and unpublished, and are invariably supported by original work of ESDU staff engineers or consultants. The whole process is subject to independent review for which crucial support is provided by industrial companies, government research laboratories, universities and others from around the world through the participation of some of their leading experts on ESDU Technical Committees. This process ensures that the results of much valuable work (theoretical, experimental and operational), which may not be widely available or in a readily usable form, can be communicated concisely and accurately to the engineering community.

We are constantly striving to develop new work and review data already issued. Any comments arising out of your use of our data, or any suggestions for new topics or information that might lead to improvements, will help us to provide a better service.

THE PREPARATION OF THIS DATA ITEM

The work on this particular Data Item was monitored and guided by the Jet Noise Working Party on behalf of the Aircraft Noise Committee:

Mr W.D. Bryce	—	Royal Aircraft Establishment, Pyestock
Dr M.J. Fisher	—	Institute of Sound and Vibration Research, University of Southampton
Mr L.W. Illston	—	British Aerospace plc, Military Aircraft Division, Kingston
Mr R.A. Pinker	—	Royal Aircraft Establishment, Pyestock
Mr C.J. Winfield	—	Rolls-Royce Ltd, Derby
Mr R.J. Woodrow	—	British Aerospace plc, Civil Aircraft Division, Hatfield.

The Aircraft Noise Committee, first met in 1971 and now has the following membership:

Chairman		
Mr R. Pinker	—	Independent
Members		
Mr S. Arrowsmith*	—	European Aviation Safety Agency (EASA), Germany
Mr W.D. Bryce	—	Bryce Research (Member Emeritus)
Ms C.L. Burley*	—	NASA, Langley Research Center, USA
Mr P.J. Hopkins	—	Rolls-Royce plc, Derby
Dr I. Imamura*	—	Japan Aerospace Exploration Agency, Japan
Prof. P. Joseph	—	Institute of Sound and Vibration Research, Southampton
M. P. Lempereur	—	Airbus France, Toulouse, France
Mr C.J. Mead	—	QinetiQ, Farnborough
Mr D. Patience	—	BAE SYSTEMS, Farnborough
Mr W.J. Readman*	—	European Aviation Safety Agency (EASA), Germany
Dr D. Rhodes	—	Civil Aviation Authority, Environmental Research & Consultancy Department (ERCD), London
Mr D.C. Riordan	—	Bombardier Aerospace Short Brothers plc, Northern Ireland.

* Corresponding Member

The construction and subsequent development of the Data Item were undertaken by

Dr C.B. Chinoy	—	Senior Engineer.

The person with overall responsibility for the work in this subject area is Mr R.F. Lambert, Head of the Noise and Structural Dynamics Group.

ESDU Copyright material. For current status contact ESDU.

Documents
Document Sharing Hub

Full document details: ESDU 88023 B-R1 2012

JET-BY-JET SHIELDING OF NOISE

CONTENTS

		Page
1.	NOTATION	1
2.	INTRODUCTION	2
3.	QUANTITATIVE DEFINITION OF JET-BY-JET SHIELDING	3
4.	THEORETICAL BACKGROUND	3
5.	APPLICATION OF THE THEORETICAL MODEL	5
6.	ACCURACY AND LIMITATIONS	5
7.	COMPUTER PROGRAM	6
8.	DERIVATION	6
9.	EXAMPLE	7
10.	ILLUSTRATIONS OF THE JET SHIELDING EFFECT	10
11.	PROGRAM INPUT	11

ESDU Copyright material. For current status contact ESDU.

Documents
Document Sharing Hub
Full document details: ESDU 88023 B-R1 2012

JET-BY-JET SHIELDING OF NOISE

1. NOTATION

		Units	
		SI	*British*
a	radius of jet	m	ft
c_0	speed of sound outside jet	m/s	ft/s
c_1	speed of sound inside jet	m/s	ft/s
D	diameter of jet	m	ft
k_0	wave number (ω/c_0)	m^{-1}	ft^{-1}
M	local Mach number (V_j/c_1)		
P_S^2	total power spectral density with shielding operative	$volts^2/Hz$	$volts^2/Hz$
P_T^2	total power spectral density for two independent jets	$volts^2/Hz$	$volts^2/Hz$
p	acoustic perturbation pressure	Pa	lbf/ft^2
p_{in}	acoustic perturbation pressure in the absence of shielding	Pa	lbf/ft^2
Q_0	source strength	m^3/s	ft^3/s
R, R'	distance from jet nozzles to observer (see Sketch 1.1)	m	ft
r_0	distance between the axes of the two jets (see Sketch 1.1)	m	ft
T_{js}	jet static temperature	K	K
T_0	ambient temperature	K	K
V_j	fully expanded jet velocity	m/s	ft/s
β, β'	polar angles of observer measured from plane normal to jet axes (see Sketch 1.1)	deg	deg
ϕ	velocity potential function		
ϕ_{in}	velocity potential in the absence of the shielding jet		
ρ_0, ρ_1	densities outside and inside jet respectively	kg/m^3	$slug/ft^3$

Issued November 1988
With Amendments A and B, March 1992 – 11 pages
Re-issued November 2012 – 11 pages

ESDU Copyright material. For current status contact ESDU.
Documents
Document Sharing Hub
Full document details: ESDU 88023 B-R1 2012

ψ, ψ'	azimuthal angles of observer (see Sketch 1.1)	deg	deg
θ, θ'	polar angles of observer measured from jet axes $(= 90 - \beta)$	deg	deg
ω	circular frequency	rad/s	rad/s

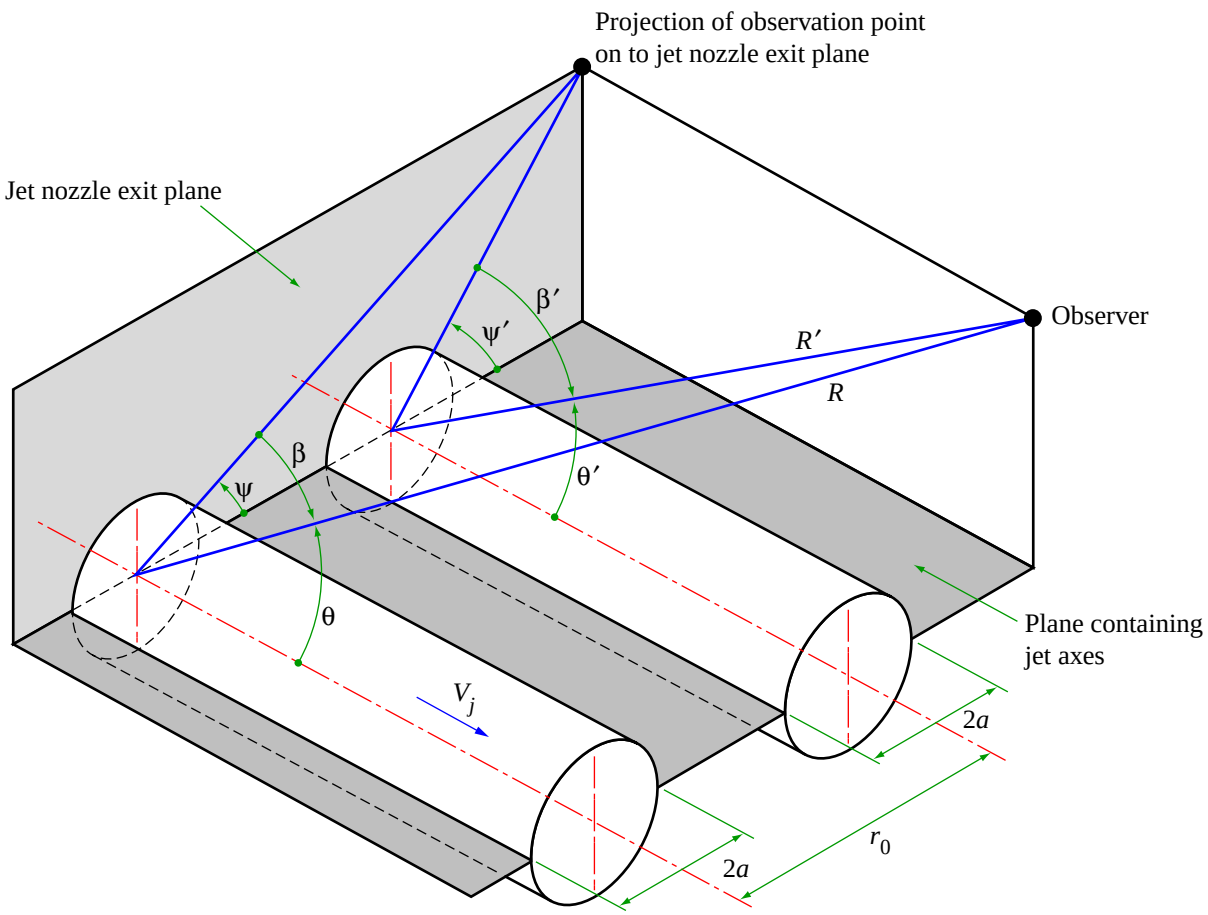

Sketch 1.1

2. INTRODUCTION

The changes in the observed noise levels from a jet, caused by the presence of an adjacent jet are commonly referred to as jet-by-jet shielding effects. The mechanisms giving rise to these changes, which could be noise amplification or noise reduction depending on the precise location of the observer, are discussed in subsequent sections. This Item provides a computerized method for predicting the noise shielding effect at a far-field observation point for a dual jet system. Both jets are assumed to have identical geometries and be operating at similar conditions. The method is valid for all azimuthal angles, but is not applicable for downstream locations where the polar angle, θ, is less than 20 degrees.

The computational procedure is based on an analytical model of jet shielding described in Derivation 1. This model of a discrete frequency point source shielded by a cylindrical jet has been extended to simulate a dual jet configuration. The geometry of this configuration is shown in Sketch 1.1.

ESDU Copyright material. For current status contact ESDU.
Documents
Document Sharing Hub
Full document details: ESDU 88023 B-R1 2012