ESDU 91001

Issued December 1991
Re-issued March 2012

Structural parameters used in response calculations

Estimation of numerical values

ESDU Copyright material. For current status contact ESDU.

Documents
Document Sharing Hub

Full document details: ESDU 91001-R1 2012

ESDU DATA ITEMS

Data Items provide validated information in engineering design and analysis for use by, or under the supervision of, professionally qualified engineers. The data are founded on an evaluatizon of all the relevant information, both published and unpublished, and are invariably supported by original work of ESDU staff engineers or consultants. The whole process is subject to independent review for which crucial support is provided by industrial companies, government research laboratories, universities and others from around the world through the participation of some of their leading experts on ESDU Technical Committees. This process ensures that the results of much valuable work (theoretical, experimental and operational), which may not be widely available or in a readily usable form, can be communicated concisely and accurately to the engineering community.

We are constantly striving to develop new work and review data already issued. Any comments arising out of your use of our data, or any suggestions for new topics or information that might lead to improvements, will help us to provide a better service.

THE PREPARATION OF THIS DATA ITEM

The work on this particular Data Item was monitored and guided by the Wind Engineering Panel. This Panel, which took over the work on wind engineering previously monitored by the Fluid Mechanics Steering Group, first met in 1979 and now has the following membership:

Chairman

Mr T.V. Lawson	—	Bristol University

Members

Mr A. Allsop	—	Ove Arup and Partners
Mr C.W. Brown	—	Independent
Prof. J.E. Cermak*	—	Colorado State University, USA
Dr N.J. Cook	—	Building Research Establishment
Prof. A.G. Davenport*	—	University of Western Ontario, Canada
Dr D.M. Deaves	—	Atkins Research and Development
Dr R.G.J. Flay*	—	University of Auckland, New Zealand
Dr A.R. Flint	—	Flint and Neill
Mr R.I. Harris	—	Cranfield Institute of Technology
Dr J.D. Holmes*	—	CSIRO, Australia
Prof. K.C. Mehta*	—	Texas Tech. Univ., USA
Mr R.H. Melling	—	Independent
Dr W. Moores	—	Meteorological Office, UK
Dr G.A. Mowatt	—	Earl and Wright Ltd
Mr J.R.C. Pedersen	—	Independent
Mr R. E. Whitbread	—	BMT Fluid Mechanics Ltd
Mr G. Wiskin	—	British Broadcasting Corporation.

* Corresponding Member

The technical work involved in the assessment of the available information and the construction and subsequent development of the Data Item was undertaken by

Mr S.J. Pugh	—	Senior Engineer.

The person with overall responsibility for the work in this subject area is Mr N. Thompson, Head of the Wind Engineering Group..

ESDU Copyright material. For current status contact ESDU.

Documents
Document Sharing Hub

STRUCTURAL PARAMETERS USED IN RESPONSE CALCULATIONS
Estimation of numerical values

CONTENTS

		Page
1.	NOTATION AND UNITS	1
2.	PURPOSE AND SCOPE	3
3.	BACKGROUND	4
3.1	Definition of Axes Systems	4
3.2	Equation of Motion	5
3.3	Accuracy and Limitations	6
4.	STRUCTURAL PARAMETERS FOR BUILDINGS, TOWERS AND STRUCTURAL MEMBERS	7
4.1	Natural Frequencies	7
4.1.1	Structural members of uniform section	7
4.1.2	Structural members of non-uniform section	9
4.1.3	Buildings, towers and stacks	10
4.2	Mode Shapes	14
4.3	Modal Damping	20
4.4	Structure Mass and Inertia	21
5.	GEOMETRICAL PROPERTIES OF COMMON STRUCTURAL SECTIONS	25
6.	REFERENCES	31

ESDU Copyright material. For current status contact ESDU.

Documents
Document Sharing Hub
Full document details: ESDU 91001-R1 2012

STRUCTURAL PARAMETERS USED IN RESPONSE CALCULATIONS
Estimation of numerical values

1. NOTATION AND UNITS

		Units	
		SI	*British*
a	reference dimension in along-wind direction	m	ft
A	local cross-sectional area	m^2	ft^2
b	reference dimension in across-wind direction	m	ft
D	diameter of circular section	m	ft
E	Young's modulus of elasticity	N/m^2	lbf/ft^2
$(EI)_{ej}$	equivalent flexural rigidity for mode j	$N\ m^2$	$lbf\ ft^2$
F_j	generalised force in mode j	N	lbf
G	shear modulus	N/m^2	lbf/ft^2
H	height or length of structure	m	ft
I	area moment of inertia of structural section	m^4	ft^4
J_j	generalised mass moment of inertia for torsional vibration in mode j	$kg\ m^2$	$^*slug\ ft^2$
k	radius of gyration of section	m	ft
K_j	generalised stiffness in mode j in translation, and in rotation	N/m N m/rad	lbf/ft lbf ft/rad
m	mass per unit length	kg/m	*slug/ft
m_{ej}	equivalent mass per unit length for mode j	kg/m	*slug/ft
M	total mass of structure	kg	*slug
M_j	generalised mass in mode j	kg	*slug
M_r	mass at location r in lumped mass model	kg	*slug
M_s	mass of parts of structure that contribute to stiffness (see Table 4.3)	kg	slug
n	number of lumped masses	–	–

Issued December 1991
Re-issued March 2012 – 31 pages

ESDU Copyright material. For current status contact ESDU.
Documents
Document Sharing Hub
Full document details: ESDU 91001-R1 2012

n_j	frequency of mode j	Hz	Hz
N_1, N_2	mode shape parameter for $j = 1$ and $j = 2$, respectively	–	–
$0P$, $0Q$, $0R$	system of right-handed rectangular principal structural axes (see Sketch 3.1)	–	–
Q_j	mode-generalised translational deflection or rotational displacement	m rad	ft rad
$\dot{Q}_j$	mode-generalised translational velocity or rotational velocity	m/s rad/s	ft/s rad/s
$\ddot{Q}_j$	mode-generalised translational acceleration or rotational acceleration	m/s^2 rad/s^2	ft/s^2 rad/s^2
r	height above ground or distance along structure	m	ft
R	radius of gyration of section; $R^2 = I/A$	m	ft
s	integer	–	–
t	shell thickness (see Table 4.3)	m	ft
T_j	generalised torque in mode j	N m	ft lbf
x_H	peak resonant component of fluctuating displacement at location where $\mu_j = 1$	m	ft
$0x$, $0y$, $0z$	system of right-handed rectangular wind axes (see Sketch 3.1)	–	–
$0X$, $0Y$, $0Z$	system of right-handed rectangular body axes (see Section 3.1)	–	–
$0X'$, $0Y'$	system of right-handed rectangular body axes, parallel to body axes $0X$ and $0Y$ respectively	–	–
x, y, z	distance along $0X$, $0Y$ and $0Z$ axes respectively	m	ft
ζ_{sj}	structural damping ratio in mode j	–	–
$(\zeta_s')_j$	rate of change of structural damping ratio in mode j with amplitude of vibration (see Section 4.3)	–	–
$(\zeta_{s0})_j$	structural damping ratio in mode j at very small amplitudes of vibration (see Section 4.3).	–	–
θ	angle between body and principal axes (see Equation (5.7))	degree	degree
λ_m	mass parameter (see Table 4.3)	–	–

ESDU Copyright material. For current status contact ESDU.

Documents
Document Sharing Hub

Full document details: ESDU 91001-R1 2012

μ_j	non-dimensional mode shape function for mode j	–	–
ρ_s	density of structure or material	kg/m^3	*slug/ft^3
ϕ_j	natural frequency parameter for mode j (see Equation (4.1))	–	–
ω_j	angular frequency of mode j ; $\omega_j = 2\pi n_j$	rad/s	rad/s

Subscripts

c	refers to distance from centroid of section (see Section 5)
j	refers to vibration in mode j
loaded	refers to axial loading of a member
P , Q , R	refer axes 0P, 0Q and 0R, respectively
r	refers to point r along the length or height of the structure
s	refers to lump s in lumped mass model
X , Y , Z	refer to axes 0X, 0Y and 0Z, respectively

* 1 slug = 32.17 lb (pounds mass)

2. PURPOSE AND SCOPE

The ESDU Wind Engineering series of Data Items provides a comprehensive set of analysis methods for wind engineering calculations. These methods are presented in individual Data Items, each of which treats particular applications. The methods are usually based on simplified models of the wind and structure characteristics and on full- and model-scale measurements. They provide the most reliable means of predicting structural loading and response due to the transfer of energy from the wind to buildings and other structures. The background to the methods, and appropriate guidance on their applicability and limitations, are given in each Data Item. Where test data are available, the measurements are compared with predictions made using the ESDU methods.

ESDU 91001 provides background information and guidance on the assessment of numerical values of those structural parameters that are required by the computer programs and hand calculations of the ESDU methods.

The principal axes system used in this Item and elsewhere in the Wind Engineering series is described in Section 3.1. In Section 3.2 a general form of the equation of motion is given for an elastic structure under dynamic loading (such as that due to the wind). Equations of this type are the basis of the response prediction methods used throughout the ESDU Wind Engineering series (and elsewhere). Accuracy and limitations of the simple equations used for the estimation of structural parameters is discussed in Section 3.3.

ESDU Copyright material. For current status contact ESDU.

Documents
Document Sharing Hub

Full document details: ESDU 91001-R1 2012

In Section 4 data and estimation methods are presented for each of the structural parameters in the response equation. The data depend on the particular class of structure considered such as tall buildings, towers and structural members, and each class is treated separately. The data are mostly applicable to flexural modes of vibration, and numerical values of these parameters differ from structure to structure and for different modes of vibration. The data are given for a range of modes of vibration typical of those considered for structures of their type.

In Section 5 data are given for the estimation of some geometrical parameters for a range of common structural sectional shapes. These parameters are the area moments of inertia, radii of gyration, cross-sectional area, location of centroid and location of shear centre (given directly for symmetrical sections).

3. BACKGROUND

3.1 Definition of Axes Systems

Wind parameters, structural geometry and the structural response parameters are described in terms of three axes systems that are not always coincident. These axis systems are shown in Sketch 3.1 and are defined as follows.

(i) **Wind axes;** $0x$, $0y$, $0z$. The $0x$ axis is aligned along the mean wind direction and the $0z$ axis is vertically upward.

(ii) **Body axes;** $0X$, $0Y$, $0Z$. These axes are used to describe the structural geometry. The $0X$ axis will usually be aligned with an axis of symmetry, if one exists, or along a dominant feature. The $0Z$ axis is usually aligned along the 'long' axis of the structure if one dimension is much larger than the others.

(iii) **Principal axes;** $0P$, $0Q$, $0R$. These axes are associated with the normal modes of vibration of the structure. For translational vibration calculations in which torsional coupling is neglected the principal axes $0P$ and $0Q$ are orthogonal to axis $0R$ and lie in the directions of translational motion.

For most wind engineering calculations it is assumed that the torsional and translational modes are uncoupled although this is rare in practice. For this condition to be met the shear centre (the point at which pure bending, with no twist, is produced under the application of a transverse load) and the torsional centre (about which the section twists under a torsional load) must be coincident. The principal axis $0R$ is the straight line about which the sum of the area products of inertia, integrated over the whole structure, is zero (see Section 5). For a uniform structure the principal axis $0R$ lies through the loci of the shear centres at each section. For non-uniform structures, such as many buildings, the shear centres at each section are not usually coincident. For torsional response calculations coupling with translational modes is often neglected and the structure is assumed to twist about the torsional axis.

ESDU Copyright material. For current status contact ESDU.

Documents
Document Sharing Hub

Full document details: ESDU 91001-R1 2012

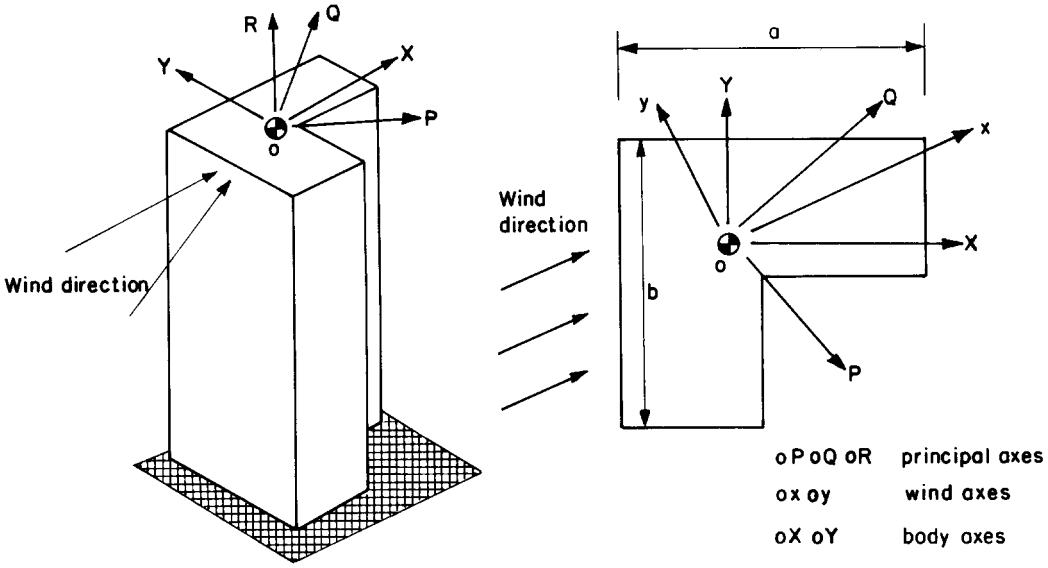

Sketch 3.1 Principal axes

3.2 Equation of Motion

A real structure such as a building or bridge consists of a very large number of connected elastic systems and will have an infinite number of natural frequencies, each with its own unique mode shape. In most wind engineering applications only a few modes of vibration contribute significantly to the overall response of the structure to a given wind loading. In order to facilitate a solution, the contributions of the mass, stiffness and damping in each mode of interest are uncoupled from those in other modes and in other directions using mode-generalised parameters. The response of the structure is approximated by the combination of the modal responses of the small set of modes of interest. For structures such as tall buildings, the responses in the two orthogonal translational directions, and also in torsion, are required. An equation of motion for flexural vibration in either of the two translational directions 0*P* and 0*Q* and in a single mode of order *j* is

$$M_j\ddot{Q}_j + 2\zeta_{sj}\sqrt{(K_jM_j)}\dot{Q}_j + K_jQ_j = F_j\,, \tag{3.1}$$

where M_j and F_j are the mode-generalised mass and aerodynamically-induced force, respectively and Q_j, $\dot{Q}_j$ and $\ddot{Q}_j$ are the mode-generalised deflection, structural velocity and structural acceleration respectively. The modal damping ratio ζ_{sj} is the combination of structural and material damping. The mode-generalised stiffness is defined as

$$K_j = (2\pi n_j)^2 M_j \tag{3.2a}$$

or

$$K_j = \omega_j^2 M_j\,. \tag{3.2b}$$

For torsional vibration about the principal axis 0*R* a similar equation can be written,

$$J_j\ddot{Q}_j + 2\zeta_{sj}\sqrt{(K_jJ_j)}\dot{Q}_j + K_jQ_j = T_j\,, \tag{3.3}$$

where Q_j, $\dot{Q}_j$ and $\ddot{Q}_j$ are the mode-generalised values of rotational displacement, velocity and acceleration respectively and J_j and T_j are respectively the mode-generalised mass moment of inertia and the mode-generalised torque, induced by the aerodynamic forces.

ESDU Copyright material. For current status contact ESDU.
Documents
Document Sharing Hub
Full document details: ESDU 91001-R1 2012

The way in which the equations of motion are solved for particular wind engineering applications using the ESDU Wind Engineering series is described in the appropriate Data Item. Guidance is given in Section 4 on the assessment of the numerical values for these structural parameters.

3.3 Accuracy and Limitations

Within the Wind Engineering series, great care has been taken to model wind excitation phenomena using the most reliable measured data, from full-scale and model tests, and the best available analytical methods. However the accuracy of response calculations using these methods is particularly dependent upon the provision of reliable estimates of the structural parameters, in particular the natural frequencies and structural damping. In the absence of measured data the user must be aware of the large uncertainties associated with the use of estimation methods. It is difficult to quantify bounds of uncertainty for structural parameters, although likely values are given in Table 3.1 for tall buildings.

TABLE 3.1 Typical bounds of uncertainty for tall buildings

Structural parameter	Estimated values	Full-scale measurements
Natural frequency	± 50%	better than ± 5%
Modal structural damping ratio	± 100%	± 10%
Generalised mass	±50%	± 20%

For structural members such as uniform beams with various support conditions, the uncertainties are largely due to the deviation of the actual support stiffnesses from the assumed values (*e.g.* fixed supports are never perfectly rigid in practice).

The effect of these uncertainties on the calculated response values can be estimated from the response equations. For example the calculated response amplitude under turbulent buffeting is inversely proportional to the square root of the modal structural damping ratio, the mode-generalised mass and the square of the natural frequency.

Further guidance on these uncertainties is given for each of the structural parameters in Section 4.

ESDU Copyright material. For current status contact ESDU.

Documents
Document Sharing Hub
Full document details: ESDU 91001-R1 2012

4. STRUCTURAL PARAMETERS FOR BUILDINGS, TOWERS AND STRUCTURAL MEMBERS

4.1 Natural Frequencies

4.1.1 Structural members of uniform section

The values of ϕ_j in Table 4.1 allow estimates to be made of natural frequencies in flexure for a range of structures and structural members of uniform section using the equation

$$n_j = \frac{\phi_j^2}{2\pi H^2}\sqrt{\frac{EI}{m}} \quad , \tag{4.1}$$

where H is the length or height* of the structure, E is Young's modulus of elasticity for the structural material and m is the mass per unit length of the structure. Data are given in Section 5 for the estimation of the second moment of area, I, of a range of typical structural sections. It is assumed that the mass and stiffness characteristics of the structure are uniform over its length.

Similar data are given for uniform multi-span structural members (beams) with a variety of multiple support conditions in Table 4.2. For these data the spans are all of equal length.

Effect of uniform axial load

The effect of a uniform axial load on the natural frequencies in flexure of simple uniform structural members can be approximated using the following equation,

$$n_{j,loaded} = n_j\left(1 + \frac{P}{|P_b|}\frac{\phi_1^2}{\phi_j^2}\right)^{1/2} \quad . \tag{4.2}$$

where P is the axial load (positive for tensile loading and negative for compressive loading) and $|P_b|$ is the modulus of the buckling load, given by Table 4.1. For compressive loading, this equation is valid up to the buckling load, $P = P_b$, at which the natural frequency is equal to zero.

Effect of additional masses

The reduction in the natural frequencies due to additional masses (that do not change the stiffness) to uniform structural members can be determined provided the mode shape function, μ_j, of the mode of vibration of interest is known or can be approximated. For this approximation it is necessary to substitute the mode-generalised equivalent mass per unit length, m_{ej}, for m in Equation (4.1). This equivalent mode-generalised mass parameter is given as

$$m_{ej} = \frac{m\int_0^1 \mu_j^2 \mathrm{d}\left(\frac{r}{H}\right) + \frac{1}{H}\sum_{s=1}^{n} M_s \mu_{js}^2}{\int_0^1 \mu_j^2 \,\mathrm{d}\left(\frac{r}{H}\right)} \quad , \tag{4.3}$$

* The symbols L and W are used elsewhere in the Wind Engineering series to denote structure length.

ESDU Copyright material. For current status contact ESDU.

Documents
Document Sharing Hub

Full document details: ESDU 91001-R1 2012

where n is the number of additional lumped masses and in the summation μ_j are the local values of the mode shape function at the location of the additional lumped masses (see Sketch 4.1). As the value of m_{ej} is relatively insensitive to the mode shape function μ_j and, except for higher order modes of vibration, additional lumped masses have a relatively small effect on μ_j, it is often valid to assume the values of μ_j for the unloaded structure apply when the masses are added.

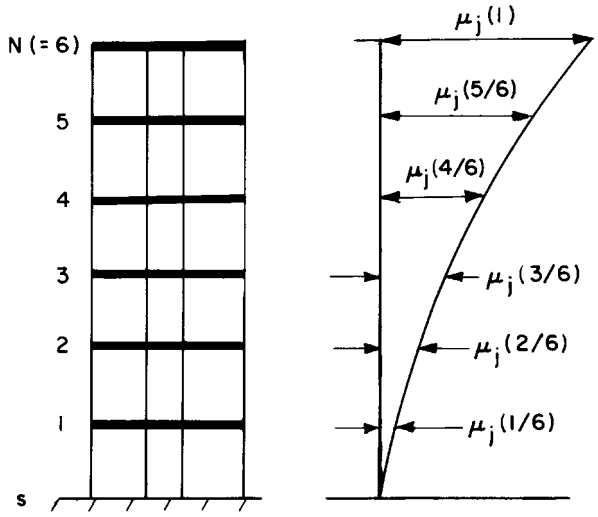

Sketch 4.1 Typical mass and mode shape representation

Approximate values of the mode shape function, μ_{jr}, and the mode shape integral parameter are given for a range of structures in Section 4.2.

Example: Uniform cantilever with tip mass

The natural frequencies for the unloaded beam are given by Equation (4.1) as

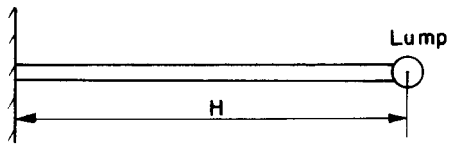

$$n_j = \frac{\phi_j^2}{2\pi(2.5)^2}\sqrt{\left[\frac{(200\times10^9)\times(2.14\times10^{-6})}{15.0}\right]}$$

and, for the first two translational modes, from Table 4.1,

$j = 1,\ \phi_1 = 1.88$ therefore $n_1 = 15.2$ Hz,

$j = 2,\ \phi_2 = 4.69$ therefore $n_2 = 94.6$ Hz,

$m = 15.0$ kg/m,
$H = 2.50$ m,
$E = 200 \times 10^9$ N/m^2,
$I = 2.14 \times 10^{-6}$ m^4,
$M_{lump} = 20.0$ kg.

It is assumed that the mode shape function, μ_j, is identical for the loaded and unloaded cases. From Tables 4.6 and 4.7, the following approximations to the mode shape function can be taken for these two modes:

$$N_1 = 1.5,\ \mu_1 = \left(\frac{r}{H}\right)^{1.5},\quad \int_0^1 \mu_1^2\, \mathrm{d}\left(\frac{r}{H}\right) = 0.25,$$

$$N_2 = 4.4,\ \mu_2 = \left(\frac{r}{H}\right)\left[4.4\left(\frac{r}{H}\right) - 3.4\right],\ \int_0^1 \mu_2^2\, \mathrm{d}\left(\frac{r}{H}\right) = 0.25.$$

ESDU Copyright material. For current status contact ESDU.
Documents
Document Sharing Hub
Full document details: ESDU 91001-R1 2012