ESDU 93022

Issued December 1993
With Amendment B
September 2008
Re-issued June 2011

Ejectors and jet pumps: computer program for design and performance for liquid flow

Associated software: ESDUpac A9322

Endorsed by
The Institution of Chemical Engineers
The Institution of Mechanical Engineers

ESDU Copyright material. For current status contact ESDU.

Documents
Document Sharing Hub

Full document details: ESDU 93022 B-R1 2011

ESDU DATA ITEMS

Data Items provide validated information in engineering design and analysis for use by, or under the supervision of, professionally qualified engineers. The data are founded on an evaluation of all the relevant information, both published and unpublished, and are invariably supported by original work of ESDU staff engineers or consultants. The whole process is subject to independent review for which crucial support is provided by industrial companies, government research laboratories, universities and others from around the world through the participation of some of their leading experts on ESDU Technical Committees. This process ensures that the results of much valuable work (theoretical, experimental and operational), which may not be widely available or in a readily usable form, can be communicated concisely and accurately to the engineering community.

We are constantly striving to develop new work and review data already issued. Any comments arising out of your use of our data, or any suggestions for new topics or information that might lead to improvements, will help us to provide a better service.

THE PREPARATION OF THIS DATA ITEM

The work on this particular Data Item was monitored and guided by the Internal Flow Panel, which first met in 1979 and had the following membership:

Chairman
Dr J.A. Eaton — University College, Galway, Eire

Members
Mr D.A. Campbell — Rolls-Royce Ltd, Derby
Mr J. Campbell — Ove Arup and Partners
Dr C.J. Clark — BP International Ltd
Prof. D.H. Freeston* — Auckland University, New Zealand
Dr M.E. Gill — W.S. Atkins Science and Technology
Mr A.J. Green — BHR Group Ltd
Dr A. Johnson — Schlumberger Cambridge Research Ltd
Prof. J.L. Livesey — University of Salford
Dr M. Moore — Independent
Mr J.A. Ward — AEA Technology, Harwell.

* Corresponding Member

The technical work involved in the assessment of the available information and the construction and subsequent development of the computer program and the Data Item was undertaken by

Mr K. Farnham — Engineer.

A significant revision of this Data Item was undertaken in 2008 by

Mr B.C. Freeman — Independent.

The person with overall responsibility for the work in this subject area is Dr F. Iudicello, Head of Fluid Mechanics, Internal Flow Group.

The ESDU Fluid Mechanics, Internal Flow Series is recognised as a valuable source of validated data and methods by the Institution of Mechanical Engineers and its Thermofluids Group is involved in continually reassessing the scope and focus of the content of this Series.

ESDU Copyright material. For current status contact ESDU.

Documents
Document Sharing Hub

EJECTORS AND JET PUMPS: COMPUTER PROGRAM FOR DESIGN AND PERFORMANCE FOR LIQUID FLOW

ESDU 93022 is one of a group of Data Items on the design and performance prediction of ejectors and jet pumps. A computer program, referred to as ESDUpac A9322, is presented for the design and performance prediction of ejectors where both the primary and secondary streams are liquids.

Two calculation procedures are provided within the program. The first procedure allows the calculation of the optimum design for a required duty. The second procedure predicts ejector performance, and allows the effects of alterations in the design, such as a change in the nozzle dimensions, to be estimated. The methods of the program are based on a one-dimensional flow theory which is documented in Appendix A of this Data Item.

Guidance is given in this Data Item on the design parameters used in the program, the use of which is illustrated by two worked examples. The program is provided to run within ESDUview, a user-friendly environment for personal computer users. A compiled executable code is also provided.

CONTENTS

		Page
1.	NOTATION AND UNITS	1
2.	INTRODUCTION	4
3.	PURPOSE AND SCOPE OF ESDUPAC A9322	4
4.	RUNNING THE PROGRAM	5
5.	DESCRIPTION OF INPUT DATA	5
5.1	Data for Design Procedure	5
5.2	Data for Performance Prediction Procedure	9
5.3	Data Input Files	11
5.3.1	General Data Input	12
5.3.2	Design Procedure Input	13
5.3.3	Performance Prediction Procedure Input	16
6.	PROGRAM OUTPUT	21
7.	WORKED EXAMPLES	22
7.1	Design Procedure Example	22
7.1.1	Data input file	22
7.1.2	Output file	23
7.2	Performance Prediction Procedure Example	26
7.2.1	Data input file	26
7.2.2	Output file	27

ESDU Copyright material. For current status contact ESDU.

Documents
Document Sharing Hub

Full document details: ESDU 93022 B-R1 2011

8. DERIVATION AND REFERENCES 33
8.1 Derivation 33
8.2 References 33

APPENDIX A 34
A.1 NOTATION 34
A.2 BASIC THEORY 36
A.2.1 Assumptions 36
A.2.2 Losses 36
A.2.3 Volume reduction factor 38
A.2.4 Mixing duct convergence ratio 38
A.2.5 Mass flow continuity 38
A.2.6 Pressure difference equations 39
A.2.7 Efficiency 40
A.2.8 Pressure ratio 41
A.2.9 Primary nozzle exit area 41
A.2.10 Cavitation 41
A.2.11 Upstream pumps 42
A.3 PROGRAM A9322 Design Procedure 43
A.3.1 Case 1: Both *M* and *N* defined by user 44
A.3.2 Case 2: *M* alone defined by user 44
A.3.3 Case 3: *N* alone defined by user 44
A.3.4 Case 4: Neither *M* nor *N* defined by user 45
A.3.5 Ejector areas and dimensions 45
A.4 PROGRAM A9322 Performance Prediction Procedure 45

ESDU Copyright material. For current status contact ESDU.

Documents
Document Sharing Hub
Full document details: ESDU 93022 B-R1 2011

EJECTORS AND JET PUMPS:
computer program for design and performance for liquid flow

1. NOTATION AND UNITS

The following parameters are input to or output from the program. The units are those used by input to and output from the program.

		Units	
		SI	*British*
A	cross-sectional area	m^2	ft^2
A_{ME}	area ratio: A_4/A_e	–	–
C	liquid density ratio, ρ_0/ρ_1	–	–
d	diameter	m	ft
H	pump head	m	ft
K_d	diffuser loss coefficient	–	–
K_m	mixing duct loss coefficient	–	–
K_p	primary nozzle loss coefficient	–	–
K_s	secondary inlet loss coefficient	–	–
L	length of parallel section of mixing duct	m	ft
L_d	length of contraction or diffuser	m	ft
M	volume flow ratio, Q''/Q'	–	–
$\dot{m}$	mass flow rate	kg/s	lbm/s
N	pressure ratio $(p_{t5} - p_{t0})/(p_{t1} - p_{t5})$	–	–
N	pump running speed	rev/min	rev/min
p_t	absolute total pressure	kPa	psi
p_{vap}	vapour pressure	kPa	psi
Q	volume flow rate	m^3/s	ft^3/s
R	area ratio, A_e'/A_4	–	–
S	length of mixing duct entry	m	ft
U	stream velocity	m/s	ft/s

Issued December 1993 – 49 pages
With Amendment B – September 2008
Re-issued June 2011 – 45 pages
This page Amendment B

ESDU Copyright material. For current status contact ESDU.
Documents
Document Sharing Hub
Full document details: ESDU 93022 B-R1 2011

x	mixing volume reduction factor, $Q^+/(Q'' + Q')$	–	–
Z	elevation of liquid surface in primary sump above ejector (see Sketch 5.1)	m	ft
η	ejector efficiency	–	–
ρ	liquid density	kg/m^3	lbm/ft^3
σ	cavitation index	–	–
ϕ_d	contraction or diffuser wall semi-included angle	deg	deg
ϕ_m	mean mixing duct wall semi-included angle	deg	deg

Subscripts

e	nozzle exit plane
max	upper limit of parameter
o	sump
$q = 0$	condition where pump flow is zero
$q = 0.5$	condition where pump flow is half rated flow, *i.e.* $Q = Q_R/2$
R	rated conditions of pump
th	primary nozzle throat
0	secondary flow entry plane
1	primary nozzle entry plane
3	mixing duct entry plane
4	mixing duct exit plane
5	contraction or diffuser exit plane

The reference planes are defined in Sketch 1.1. Note that, for constant area mixing, planes 2 and 3 are coincident and are referred to by subscript e. In this case, $S = 0$.

Superscripts

$'$	refers to primary stream
$''$	refers to secondary stream
$+$	refer to mixed stream

ESDU Copyright material. For current status contact ESDU.

Documents
Document Sharing Hub

Full document details: ESDU 93022 B-R1 2011

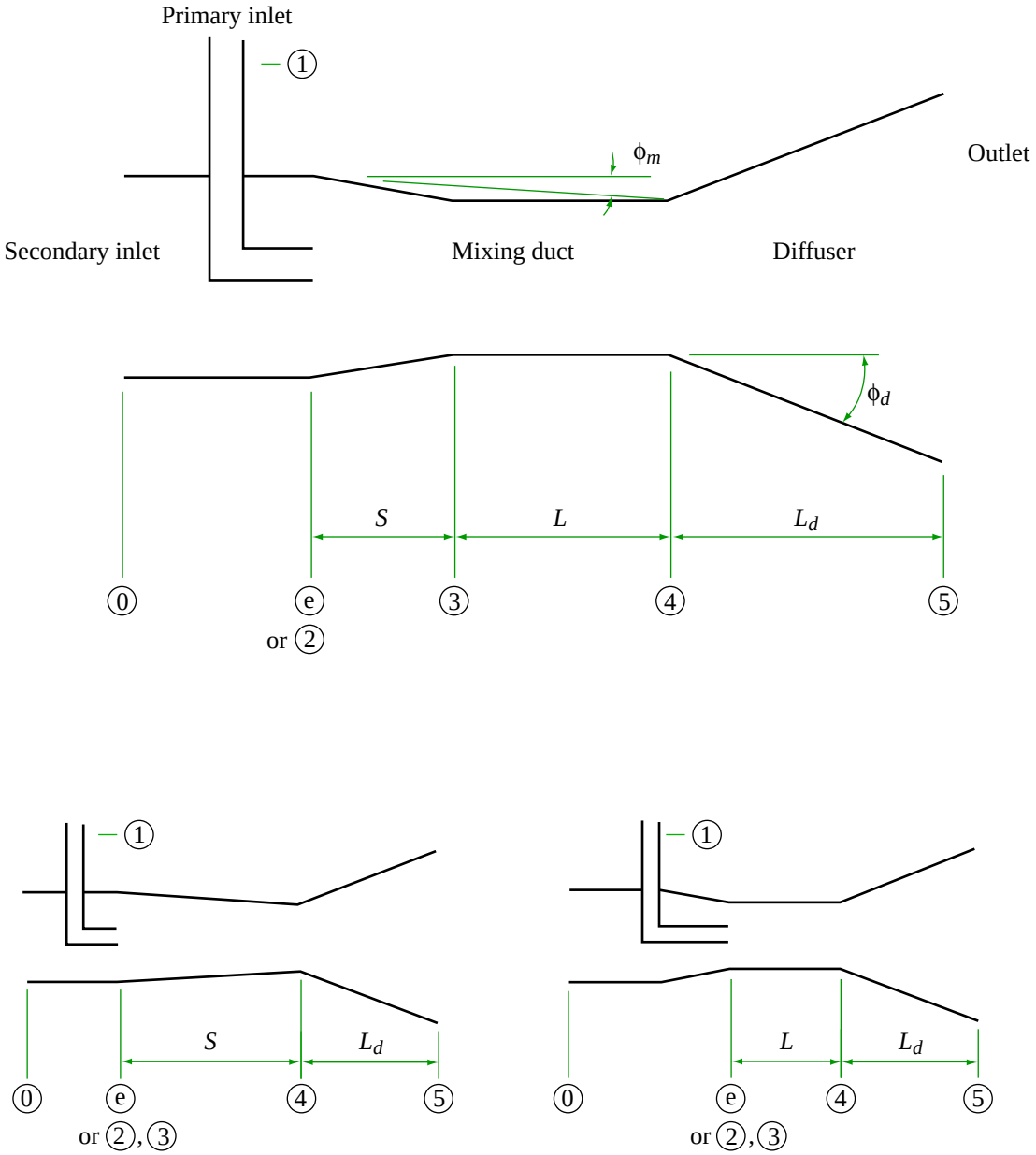

(i) **Convergent mixing duct.**
In this case, the mixing duct length, L, is effectively zero.

(ii) **Parallel-sided mixing duct.**
In this case, the mixing duct entry length, S, is effectively zero.

Sketch 1.1 Ejector configuration and typical cases

ESDU Copyright material. For current status contact ESDU.

Documents
Document Sharing Hub

Full document details: ESDU 93022 B-R1 2011

2. INTRODUCTION

ESDU 93022 is one of a group of ESDU Data Items concerned with the design and performance of ejectors and jet pumps. Such devices are characterised by the use of the kinetic energy of a fluid stream (the primary flow) to impart momentum to a second fluid stream (the secondary flow) by direct mixing. Each Data Item in the group treats different combinations of working fluids (which can be gases, liquids or solids in suspension); the applicability of the Data Items is outlined in Table 2.1.

TABLE 2.1 Applicability of Data Items in the group on ejectors and jet pumps

Fluid		Fluid temperatures	Mixing Duct		Design methods	Performance prediction
Primary flow	Secondary flow		Constant area	Conical		
Gas	Gas	Any	✓	✓	ESDUpac A9242	ESDUpac A9242
Steam	Gas	Any (saturated gas, saturated steam)	✓	✓	86030	86030
Steam	Liquid	Any (saturated steam)	✓	✓	86030	86030
Liquid	Liquid	N/A	✓	✓	ESDUpac A9322 and 85032	ESDUpac A9322 and 85032

The terms “ejector” and “jet pump” are synonymous, and the term “injector” is also commonly used. Guidance on the applications of liquid flow ejectors (*e.g.* in lubrication, hydro-electric schemes, deep well pumping and liquid aeration) and on their principles of operation is given in ESDU 85032.

3. PURPOSE AND SCOPE OF ESDUPAC A9322

ESDU 93022 provides details of a computer program, ESDUpac A9322, for use in the design of ejectors and jet pumps in which both the working fluids are liquids. The program extends the scope of the calculation procedure of ESDU 85032 to include non-parallel-sided mixing ducts, and allows the user to model an ejector with pumps or constant pressure sources upstream of either the primary or secondary inlet. The program also extends the methods of ESDU 85032 to cases for which a volume change occurs during the mixing of primary and secondary flows.

ESDUpac A9322 provides the following design and performance prediction procedures.

(i) **Design Procedure.** Given a selection of entry and required exit pressures and flow rates, along with estimates of loss coefficients, the program calculates primary nozzle, secondary inlet and ejector exit dimensions, using the procedure outlined in Section A.3 of Appendix A.

(ii) **Performance Prediction Procedure.** Given the ejector dimensions, loss factors and a range of flow conditions at the entry, the program calculates the outlet conditions and the flow conditions throughout the ejector, using the procedure outlined in Section A.4 of Appendix A.

For both calculation procedures, the inlet conditions may be given either in terms of a pump characteristic (for centrifugal or mixed flow pumps) and flow rate or a pressure and flow rate.

ESDU Copyright material. For current status contact ESDU.
Documents
Document Sharing Hub
Full document details: ESDU 93022 B-R1 2011

An overview on the operational procedure for running the ESDUpacA9322 program is provided in Section 4. Section 5 describes the required input data. The program output is described in Section 6. A number of examples which illustrate the use of the program are presented in Section 7. The full analysis of the theoretical model used in the computer program is presented in Appendix A.

4. RUNNING THE PROGRAM

ESDUpac A9322 is provided within ESDUscope on CD and via local intranet or via the World Wide Web in two formats.

An **interactive format** of the program is contained within ESDUview format. This is a user-friendly 'windowing' environment for running ESDUpacs on personal computers. ESDUview manages all operations such as setting up input files, running the FORTRAN code and viewing output files. On selecting ESDUpac A9322 from the menu of available programs, the user is prompted for all input data. Guidance is provided on the features of ESDUview and all the program variables in the context-sensitive HELP facility. At various points throughout operation a number of checks are carried out on the entered data. Error messages alert the user to incorrect numerical values and provide guidance on their correction; other potential problems are highlighted by warning messages.

The features of ESDUview are described in detail in Section 1 of the Fluid Mechanics, Internal Flow Series.

An **executable format** of the program is supplied. In order to run this version, the user must create a data file, which contains the input data required by the program, by following exactly the data input sequence of Section 5.3. To run the executable version of the program from the keyboard the name of the data input file must be specified on the command line using the operating system redirection symbols, *e.g.*:

```
A9322Vxx < IN9322
```

where Vxx denotes the program version and IN9322 is the name of the input file.

The ESDUview format of the program is recommended for its ease of operation. Although the ESDUview format can be operated without reference to this Data Item, the user may find useful the guidance (complementary to that in the ESDUview HELP facility) on the program variables and model details given in Section 5.

5. DESCRIPTION OF INPUT DATA

5.1 Data for Design Procedure

The scope of the design procedure and possible combinations of input and the output generated are summarised in Table 5.1.

In the Design Procedure, the program requires sufficient data to determine values of one or more of the three total pressures at the inlets and at outlet of the ejector (see Sketch 1.1), p_{t0}, p_{t1} and p_{t5} and one or more of the corresponding volume flow rates Q', Q'' and Q^+ or mass flow rates $\dot{m}''$, $\dot{m}'$ and $\dot{m}'' + \dot{m}'$. The program subsequently calculates the pressure ratio, N, and the volume flow ratio, M. An option is provided to allow the user the flexibility to input combinations of known values of pressure, mass flow rate and supply pump running speed.

ESDU Copyright material. For current status contact ESDU.
Documents
Document Sharing Hub
Full document details: ESDU 93022 B-R1 2011

The user may:

either (i) allow the program to derive both M and N (that is, enter less than 2 mass or volume flow rates and less information than is needed to define all 3 total pressures),

or (ii) enter sufficient data to define N alone (that is, enter sufficient information to define all 3 total pressures and less than 2 of the mass or volume flow rates),

or (iii) enter sufficient data to define M alone (that is, enter 2 of the 3 mass or volume flow rates and less information than is sufficient to define all 3 total pressures),

or (iv) enter sufficient data to define both M and N (that is, enter 2 of the 3 mass or volume flow rates and sufficient information to define all 3 total pressures).

The program optimises ejector efficiency within the bounds defined by the pressure and mass or volume flow rate requirements. Values for both M and N are returned. If sufficient data have been provided by the user, values of unknown pressures, volume and mass flow rates and pump speeds are also returned.

The inlet total pressures may be entered in one of the following two ways:

Either enter the ejector inlet total pressure (p_{t0}, p_{t1}) directly

or enter sufficient data to define an operating characteristic for pumps running upstream of the ejector inlets (see Sketch 5.1). Using the pump characteristic, the program calculates the ejector inlet pressure.

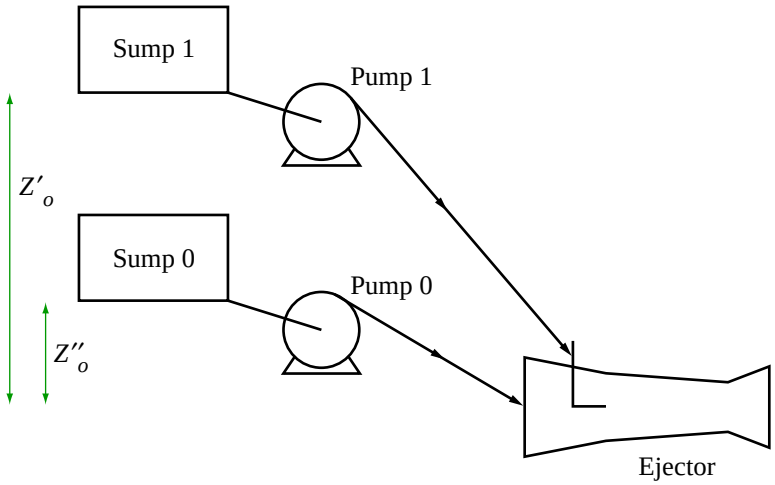

Sketch 5.1 Schematic of pumps supply to ejectors inlets

ESDU Copyright material. For current status contact ESDU.
Documents
Document Sharing Hub
Full document details: ESDU 93022 B-R1 2011

TABLE 5.1 SUMMARY OF DESIGN PROCEDURE

Input parameters required for inlet type combinations				Derived parameters
Primary pump, secondary pump	**Primary pump, constant secondary pressure**	**Constant primary pressure, secondary pump**	**Constant primary pressure, constant secondary pressure**	
N_1, N_0, p_{t5} 2 from $\left\{ Q', Q'', Q^+ \right.$	N_1, p_{t0}, p_{t5} 2 from $\left\{ Q', Q'', Q^+ \right.$	p_{t1}, N_0, p_{t5} 2 from $\left\{ Q', Q'', Q^+ \right.$	p_{t1}, p_{t0}, p_{t5} 2 from $\left\{ Q', Q'', Q^+ \right.$	Ejector dimensions (choice of 2 solutions). Remaining flow rate.
N_1, N_0, p_{t5} 1 from $\left\{ Q', Q'', Q^+ \right.$	N_1, p_{t0}, P_{t5} 1 from $\left\{ Q', Q'', Q^+ \right.$	p_{t1}, N_0, p_{t5} 1 from $\left\{ Q', Q'', Q^+ \right.$	p_{t1}, p_{t0}, p_{t5} 1 from $\left\{ Q', Q'', Q^+ \right.$	Ejector dimensions. Remaining flow rates.
N_1, N_0, p_{t5}	N_1, p_{t0}, p_{t5}	p_{t1}, N_0, p_{t5}	p_{t1}, p_{t0}, p_{t5}	Ejector area ratios. Flow ratio.
2 from $\left\{ N_1, N_0, p_{t5} \right.$ 2 from $\left\{ Q', Q'', Q^+ \right.$	2 from $\left\{ N_1, p_{t0}, p_{t5} \right.$ 2 from $\left\{ Q', Q'', Q^+ \right.$	2 from $\left\{ p_{t1}, N_0, p_{t5} \right.$ 2 from $\left\{ Q', Q'', Q^+ \right.$	2 from $\left\{ p_{t1}, p_{t0}, p_{t5} \right.$ 2 from $\left\{ Q', Q'', Q^+ \right.$	Ejector dimensions. Remaining pressure/ pump speed. Remaining flow rate.
2 from $\left\{ N_1, N_0, p_{t5} \right.$ 1 from $\left\{ Q', Q'', Q^+ \right.$	2 from $\left\{ N_1, p_{t0}, p_{t5} \right.$ 1 from $\left\{ Q', Q'', Q^+ \right.$	2 from $\left\{ p_{t1}, N_0, p_{t5} \right.$ 1 from $\left\{ Q', Q'', Q^+ \right.$	2 from $\left\{ p_{t1}, p_{t0}, p_{t5} \right.$ 1 from $\left\{ Q', Q'', Q^+ \right.$	Ejector dimensions. Remaining pressure/ pump speed. Remaining flow rates.
2 from $\left\{ N_1, N_0, p_{t5} \right.$	2 from $\left\{ N_1, p_{t0}, p_{t5} \right.$	2 from $\left\{ p_{t1}, N_0, p_{t5} \right.$	2 from $\left\{ p_{t1}, p_{t0}, p_{t5} \right.$	Ejector area ratios. Remaining pressure/ pump speed. Flow ratio.

Full document details: ESDU 93022 B-R1 2011 ESDU Copyright material. For current status contact ESDU.

AVA Documents Document Sharing Hub

TABLE 5.1 SUMMARY OF DESIGN PROCEDURE (Continued)

Input parameters required for inlet type combinations				Derived parameters
Primary pump, secondary pump	**Primary pump, constant secondary pressure**	**Constant primary pressure, secondary pump**	**Constant primary pressure, constant secondary pressure**	
1 from $\left\{\begin{matrix} N_1 \\ N_0 \\ p_{t5} \end{matrix}\right.$ 2 from $\left\{\begin{matrix} Q' \\ Q'' \\ Q^+ \end{matrix}\right.$	1 from $\left\{\begin{matrix} N_1 \\ p_{t0} \\ p_{t5} \end{matrix}\right.$ 2 from $\left\{\begin{matrix} Q' \\ Q'' \\ Q^+ \end{matrix}\right.$	1 from $\left\{\begin{matrix} p_{t1} \\ N_0 \\ p_{t5} \end{matrix}\right.$ 2 from $\left\{\begin{matrix} Q' \\ Q'' \\ Q^+ \end{matrix}\right.$	1 from $\left\{\begin{matrix} p_{t1} \\ p_{t0} \\ p_{t5} \end{matrix}\right.$ 2 from $\left\{\begin{matrix} Q' \\ Q'' \\ Q^+ \end{matrix}\right.$	Ejector area ratios. Pressure ratio. Remaining flow rate.
1 from $\left\{\begin{matrix} N_1 \\ N_0 \\ p_{t5} \end{matrix}\right.$ 1 from $\left\{\begin{matrix} Q' \\ Q'' \\ Q^+ \end{matrix}\right.$	1 from $\left\{\begin{matrix} N_1 \\ p_{t0} \\ p_{t5} \end{matrix}\right.$ 1 from $\left\{\begin{matrix} Q' \\ Q'' \\ Q^+ \end{matrix}\right.$	1 from $\left\{\begin{matrix} p_{t1} \\ N_0 \\ p_{t5} \end{matrix}\right.$ 1 from $\left\{\begin{matrix} Q' \\ Q'' \\ Q^+ \end{matrix}\right.$	1 from $\left\{\begin{matrix} p_{t1} \\ p_{t0} \\ p_{t5} \end{matrix}\right.$ 1 from $\left\{\begin{matrix} Q' \\ Q'' \\ Q^+ \end{matrix}\right.$	Ejector area ratios. Pressure ratio. Remaining flow rates.
1 from $\left\{\begin{matrix} N_1 \\ N_0 \\ p_{t5} \end{matrix}\right.$	1 from $\left\{\begin{matrix} N_1 \\ p_{t0} \\ p_{t5} \end{matrix}\right.$	1 from $\left\{\begin{matrix} p_{t1} \\ N_0 \\ p_{t5} \end{matrix}\right.$	1 from $\left\{\begin{matrix} p_{t1} \\ p_{t0} \\ p_{t5} \end{matrix}\right.$	Ejector area ratios. Pressure ratio. Flow ratio.
2 from $\left\{\begin{matrix} Q' \\ Q'' \\ Q^+ \end{matrix}\right.$	2 from $\left\{\begin{matrix} Q' \\ Q'' \\ Q^+ \end{matrix}\right.$	2 from $\left\{\begin{matrix} Q' \\ Q'' \\ Q^+ \end{matrix}\right.$	2 from $\left\{\begin{matrix} Q' \\ Q'' \\ Q^+ \end{matrix}\right.$	Ejector area ratios. Pressure ratio. Remaining flow rate.
1 from $\left\{\begin{matrix} Q' \\ Q'' \\ Q^+ \end{matrix}\right.$	1 from $\left\{\begin{matrix} Q' \\ Q'' \\ Q^+ \end{matrix}\right.$	1 from $\left\{\begin{matrix} Q' \\ Q'' \\ Q^+ \end{matrix}\right.$	1 from $\left\{\begin{matrix} Q' \\ Q'' \\ Q^+ \end{matrix}\right.$	Ejector area ratios. Pressure ratio. Remaining flow rates.
No pump running speed, pressure or flow rate entered in input file.	No pump running speed, pressure or flow rate entered in input file.	No pump running speed, pressure or flow rate entered in input file.	No pressure or flow rate entered in input file.	Ejector area ratios. Pressure ratio. Flow ratio.

Documents
Document Sharing Hub

Full document details: ESDU 93022 B-R1 2011. For current status contact ESDU.
ESDU Copyright material.

5.2 Data for Performance Prediction Procedure

The scope of the Performance Prediction Procedure is summarised in Table 5.2.

The Performance Prediction Procedure calculates the ejector performance from combinations of input variables. The output file contains the ejector outlet flow conditions, p_{t5}, and Q^+ and $\dot{m}^+$, as well as values of the inlet flow variables not defined by the data input file.

The inlet total pressures may be entered in one of two following ways:

Either enter the ejector inlet total pressure (p_{t0}, p_{t1}) directly

or enter sufficient data to define an operating characteristic for a pump running upstream of the ejector inlets (see Sketch 5.1). The program calculates the ejector inlet total pressure using the pump characteristic.

In Table 5.2 one of the eight combinations defined by the table must be chosen, and values for the parameters in the "Input parameters" column entered in the order specified by the data entry sequence in Section 5.3.3.

Where there is a choice within the "Input parameters" column between two or more variables, the user must assign the value 0 to parameters that the program derives. The flow rates may also be input as mass flow rates, in which case M must be replaced by $\dot{m}''/\dot{m}'$.

TABLE 5.2 Summary of Performance Prediction Procedure

Inlet type		Input parameters	Derived parameters
Primary stream	**Secondary stream**		
Pump	Pump	1 from $\begin{cases} N_1 \\ N_0 \end{cases}$ 2 from $\begin{cases} Q' \\ Q'' \\ M \end{cases}$	p_{t5} Q^+ Remaining pump speed, N_1 or N_0
		N_1 N_0 1 from $\begin{cases} Q' \\ Q'' \\ M \end{cases}$	p_{t5} Q^+ Remaining flow rate(s)/ratio, Q', Q'' or M
Pump	Constant pressure source	p_{t0} 2 from $\begin{cases} Q' \\ Q'' \\ M \end{cases}$	p_{t5} Q^+ Primary pump speed, N_1
		N_1 p_{t0} 1 from $\begin{cases} Q' \\ Q'' \\ M \end{cases}$	p_{t5} Q^+ Remaining flow rate(s)/ratio, Q', Q'' or M

ESDU Copyright material. For current status contact ESDU.

Documents
Document Sharing Hub

Full document details: ESDU 93022 B-R1 2011

TABLE 5.2 Summary of Performance Prediction Procedure (Continued)

Inlet type		Input parameters	Derived parameters
Primary stream	**Secondary stream**		
Constant pressure source	Pump	p_{t1} 2 from $\left\{ Q', Q'', M \right.$	p_{t5} Q^+ Secondary pump speed, N_0
		p_{t1} N_0 1 from $\left\{ Q', Q'', M \right.$	p_{t5} Q^+ Remaining flow rate(s)/ratio, Q', Q'' or M
Constant pressure source	Constant pressure source	1 from $\left\{ p_{t1}, p_{t0} \right.$ 2 from $\left\{ Q', Q'', M \right.$	p_{t5} Q^+ Remaining pressure, p_{t1} or p_{t0}
		p_{t1} p_{t0} 1 from $\left\{ Q', Q'', M \right.$	p_{t5} Q^+ Remaining flow rate(s)/ratio, Q', Q'' or M

In the Performance Prediction Procedure the outlet conditions of an ejector can, if required, be estimated over a range of nine values of one of five input parameters tabulated below, where the remaining four input parameters are held constant.

Either	primary pump running speed,	N_1,
or	primary inlet total pressure,	p_{t1},
	Primary stream mass or volume flow rate,	$\dot{m}'$ or Q',
Either	secondary pump running speed,	N_0,
or	secondary inlet total pressure,	p_{t0},
	Secondary stream mass or volume flow rate,	$\dot{m}''$ or Q'',
	Mass or volume flow ratio,	$\dot{m}''/\dot{m}'$ or M,

The user must select which of the five parameters to vary, and assign to it upper and lower value limits to define an operating range. The program reads the line of text preceding each of the five parameters listed above. If this text begins with the five characters "RANGE", the program will read two values for the parameter, *i.e.* the lower and upper limits described above. The program predicts then the performance of the ejector using nine self-generated, equi-spaced values in this range.

ESDU Copyright material. For current status contact ESDU.
Documents
Document Sharing Hub
Full document details: ESDU 93022 B-R1 2011

Note that flow rates may be entered either directly, as primary and secondary mass or volume flow rates ($\dot{m}'$, $\dot{m}''$ or Q', Q''), or in terms of the ratio, $\dot{m}''/\dot{m}'$ or M. Also, where a constant pressure source is specified, the data input sequence requires values for ejector inlet total pressure and, where a pump is specified, the pump running speed.

One, and only one, of the five parameters listed above must take a range of values. If this requirement is not satisfied, an error message is generated by the program and no calculations are performed.

5.3 Data Input Files

At run time, the program reads from a text data input file all the information necessary to define the nature of the problem. When using the ESDUview format of the program, this data file is generated automatically and the program operates when the user selects RUN from an on-screen menu (provided all the pre-run checks are satisfied). If you do not intend to use the ESDUview format but wish to run the executable code (file A9322Vxx.EXE), this data file must be constructed (outside the program) using a text editor. The order in which data variables are required by the program in data input files is shown in Section 5.3.1; this data entry sequence must be followed exactly.

The data input file contains information on the type of analysis required (that is, the design or performance prediction procedure), the flow conditions and the geometry of the ejector.

The use of data input files allows the information to be checked before each run and edited if necessary. An attempt has been made to make this process "user friendly". **The program requires the user to enter one line of text, of up to 45 characters in length, on the line preceding each of the entries described in Tables 5.3a, 5.3b, and 5.3c**. This facility allows the user to annotate data files for ease of interpretation. The form of the entered text is generally discretionary (and can in the minimum case be two adjacent separators, *e.g.* ' ' or " "), and does not control the data input, except where noted in Table 5.3c.

Example data input files are presented in Section 7. The user should note, however, that these examples cover only two of the large number of possible routes through the data input procedure.

ESDU Copyright material. For current status contact ESDU.

Documents
Document Sharing Hub

Full document details: ESDU 93022 B-R1 2011

5.3.1 General Data Input

TABLE 5.3a General Data for the Analysis

Entry order	Input parameter	SI units	British units	Variable type
(1)	Output filename. Enter name of file to which output will be written.	–	–	Character
(2a) (2b) (2c)	Title of the run (3 lines of text of up to 72 characters each). Enter text for first line of title or enter blank line. Enter text for second line of title or enter blank line. Enter text for third line of title or enter blank line.	–	–	Character Character Character
(3)	Enter 1 or 2 as required, where 1 is for SI units, 2 is for British units.	–	–	Integer
(4)	Enter ρ', the density of the primary liquid.	kg/m^3	lb/ft^3	Real
(5)	Enter ρ'', the density of the secondary liquid.	kg/m^3	lb/ft^3	Real
(6)	Enter x, the volume reduction factor of the mixed liquids.	–	–	Real
(7)	Enter p_{vap}, the vapour pressure of the secondary liquid.	kPa	psi	Real
(8)	Enter σ, the cavitation index.	–	–	Real
(9)	Enter 1 or 2 as required, where 1 instructs the program to accept data in terms of volume flow rates, 2 instructs the program to accept data in terms of mass flow rates.	–	–	Integer
(10)	Enter 1 or 2 as required, where 1 instructs the program to use Design Calculation, 2 instructs the program to use Performance Prediction Procedure.	–	–	Integer

The data entry sequence continues as follows:

For Entry at (10)		*Go to Entry*
1	(Design)	(D11) in Table 5.3b of Section 5.3.2
2	(Performance)	(P11) in Table 5.3c of Section 5.3.3

ESDU Copyright material. For current status contact ESDU.

Documents
Document Sharing Hub

Full document details: ESDU 93022 B-R1 2011