Enhanced hexalobular internal driving feature for bolts and screws

1 Scope

This Ford Motor Company standard specifies the shape and basic dimensions of enhanced hexalobular internal driving feature for bolts and screws including the gauging method.

The curvature of the contour of the enhanced hexalobular internal driving feature is defined by the gauges specified in Tables 3, 4 and 5. Additional information which may be used when drawing the contour is given in the informative annex A.

2 Basic dimensions

See Figure 1 and Table 1

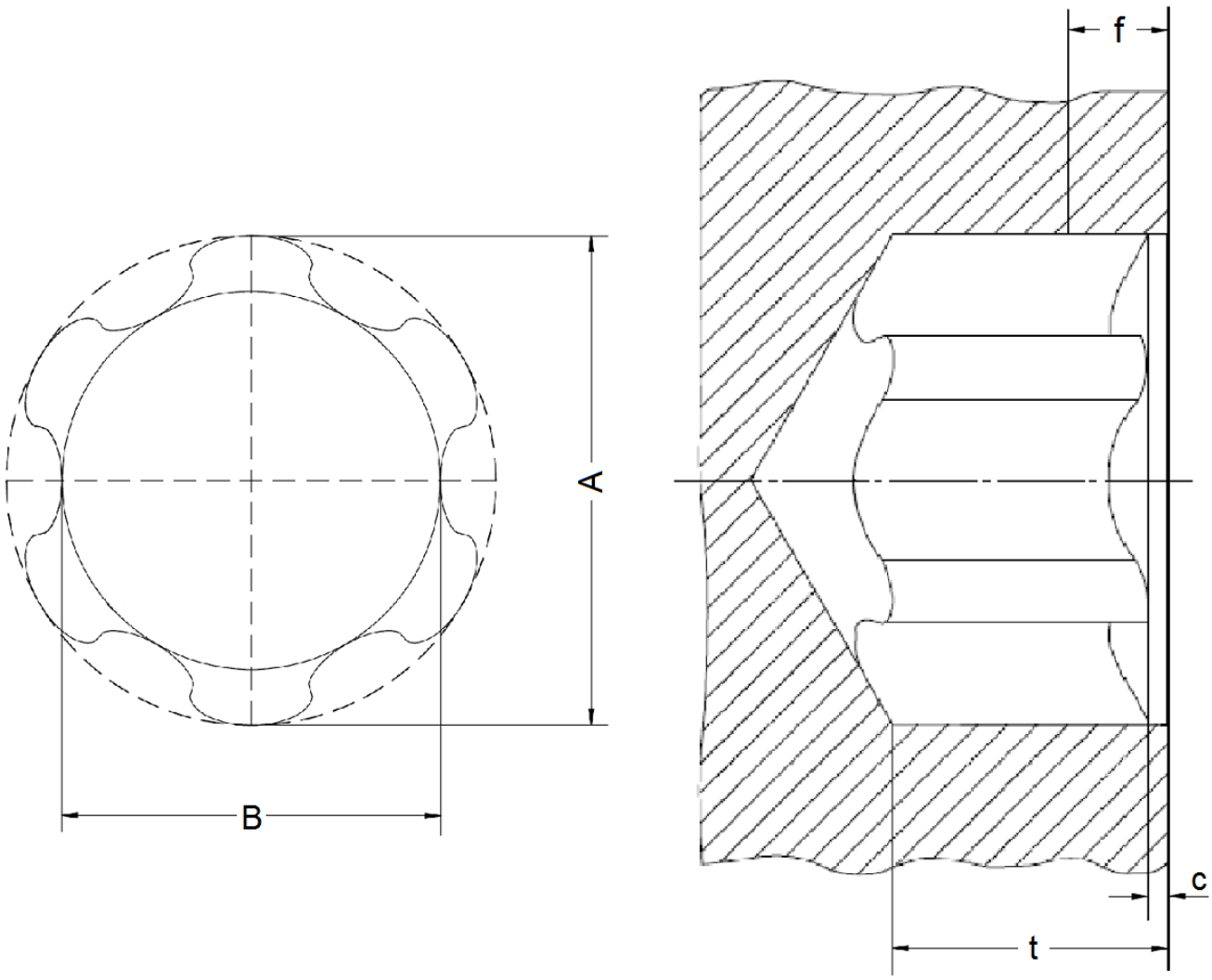

Counterbore *c*: 0.13 mm maximum for socket No. 6 IP through 15 IP, 0.25 mm maximum over socket No. 15 IP

Penetration depth *t*: see relevant product standard

NOTE: The contour of the bottom of the socket beyond the gauge is at the option of the manufacturer.

Documents
Document Sharing Hub

Copyright Ford Motor Company
Provided by IHS Markit under license with FORD
No reproduction or networking permitted without license from IHS
Full document details: FORD WB900 APPENDIX F 2013

Printed copies are uncontrolled

Copyright © 2012, Ford Global Technologies, LLC
Licensee=/, User=,
Not for Resale,

Table 1 – Basic Dimensions

Dimensions in millimeters

Hexalobular Socket No.	Nominal Dimensions[a]	
	A (ref)	*B (ref)*
6 IP	1.75	1.27
8 IP	2.39	1.75
10 IP	2.82	2.05
15 IP	3.35	2.4
20 IP	3.94	2.85
25 IP	4.52	3.25
30 IP	5.61	4.05
40 IP	6.76	4.85
45 IP	7.92	5.64
50 IP	8.94	6.45
55 IP	11.33	8.05
60 IP	13.44	9.6

Table 2 – Enhanced Hexalobular Internal Drive Tolerances

Dimensions in millimeters

Socket No.	A		B		Ea	Eb	Fa	Fb
Drive Size	Max	Min	Max	Min	Ref	Ref	Ref	Ref
6 IP	1.7842	1.7416	1.3877	1.3454	0.1245	0.2313	0.0775	0.1843
8 IP	2.4241	2.3818	1.8653	1.823	0.1651	0.3051	0.1181	0.2581
10 IP	2.8508	2.8008	2.1802	2.1302	0.1969	0.359	0.145	0.3082
15 IP	3.3842	3.3342	2.612	2.562	0.2222	0.4233	0.1714	0.3725
20 IP	3.9684	3.9184	3.0946	3.0446	0.2476	0.4945	0.1968	0.4437
25 IP	4.5649	4.4899	3.4981	3.4231	0.3023	0.565	0.2388	0.5015
30 IP	5.6571	5.5821	4.3973	4.3223	0.3505	0.6979	0.287	0.6344
40 IP	6.8134	6.7124	5.2894	5.1884	0.4229	0.8385	0.3467	0.7623
45 IP	7.9818	7.8808	6.2952	6.1942	0.4635	0.9839	0.3874	0.9077
50 IP	8.9978	8.8968	6.9861	6.8851	0.5448	1.0964	0.4686	1.0202
55 IP	11.3854	11.2844	9.0842	8.9832	0.6236	1.4048	0.5347	1.3159
60 IP	13.4424	13.3418	10.5214	10.4208	0.7912	1.6518	0.6769	1.5375

Note: Min A & B dimensions are the max tool dimension +0.05mm to accommodate for max coating thickness
Max A & B dimensions are the Min A & B dimensions + the standard hexalobular drive tolerance
E & F are reference values using max go-gage radius

--`,,```,,,,´´´´-`-`,,`,,`,`,,`---

Documents
Document Sharing Hub

Copyright Ford Motor Company
Provided by IHS Markit under license with FORD
No reproduction or networking permitted without license from IHS
Full document details: FORD WB900 APPENDIX F 2013

Printed copies are uncontrolled

Copyright © 2012, Ford Global Technologies, LLC
Licensee=/, User=,
Not for Resale,

3 Gauging

3.1 Principle

The enhanced hexalobular internal driving feature shall allow the GO gauge to enter freely to the penetration depth *t* as specified in the relevant product standards.

The NO GO gauges shall not enter the enhanced hexalobular internal driving feature to a depth greater than the fallaway allowance specified in Table 3. If the gage penetrates the internal drive feature outside of the specified fallaway allowance the part will be deemed unacceptable.

Table 3 – Fallaway Allowance

Dimensions in millimeters

Socket No.	6 IP	8 IP	10 IP	15 IP	20 IP	25 IP	30 IP	40 IP	45 IP	50 IP	55 IP	60 IP
Fallaway Allowance f	0.35	0.48	0.56	0.67	0.79	0.90	1.12	1.18	1.39	1.56	1.98	2.35

All gauging is performed with reference to the top surface of the head. In the case of oval or round top heads, measurements are taken from the actual intersection of the top surface of the head and the hexalobular internal driving feature counter bore.

When using a dial penetration gauge, this should be adjusted to zero while the gauge is pressed against a flat surface thereby compressing the plunger to make it flush with the gauge reference surface. See Figure 2.

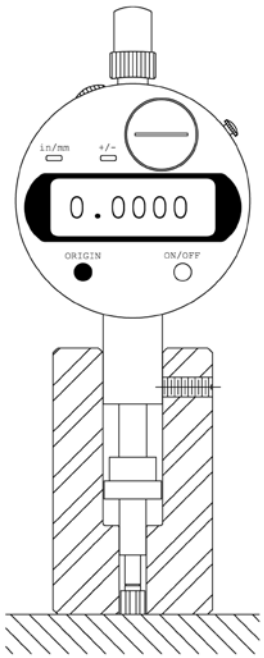

Figure 2 – Penetration gauge in zero position

Documents
Document Sharing Hub
Copyright Ford Motor Company
Provided by IHS Markit under license with FORD
No reproduction or networking permitted without license from IHS
Full document details: FORD WB900 APPENDIX F 2013
Printed copies are uncontrolled
Copyright © 2012, Ford Global Technologies, LLC
Licensee=/, User=,
Not for Resale,