| | | |
|---|---|---|
| GM WORLDWIDE ENGINEERING STANDARDS | Test Procedure | GMW14390 |

# Durability Test of Exhaust Pipe Connections

## 1 Introduction

**Note:** Nothing in this standard supercedes applicable laws and regulations.

**Note:** In the event of conflict between the English and domestic language, the English language shall take precedence.

**1.1 Purpose.** Determination of the dynamic strength in a bench test.

**1.2 Applicability.** For all pipe connections of mufflers, catalytic converters, diesel particulate filters and connecting flanges.

## 2 References

**Note:** Only the latest approved standards are applicable unless otherwise specified.

**2.1 External Standards/Specifications.**

None

**2.2 GM Standards/Specifications.**

None

**2.3 Additional References.**

Component Technical Specification (CTS)/Drawing Specification

## 3 Resources

**3.1 Facilities.** Force controlled test bench with closed control loop, travel sensor and cycle counter. The test device shall be suitable for dynamic forces of 100 N to 2000 N with regard to a test frequency range of 10 Hz to 20 Hz (sine). The test facility shall have a valid International Organization for Standardization (ISO) certificate which is noted in a test report.

**3.1.1 Calibration.** The test facilities and equipment shall be in good working order and shall have a valid calibration label.

**3.1.2 Alternatives.** Alternative test facilities and equipment may also be used. However, all measuring variables as specified in this standard shall be determined correctly with respect to their physical definition.

**3.2 Equipment.**

**3.2.1 Peak Value Recorder.** Peak value recorder to automatically record the oscillation amplitude, with automatic shutoff for the testing machine when the oscillation amplitude exceeds the adjusted limiting values.

**3.2.2 Attachment of Test Piece.**

**3.2.2.1 Attachment of Flange.** The flange shall be attached on a rigid fixing device without gasket with regard to bolted joint specified by drawing. The connection shall be such that pipe connection/welded joint of the flange is not impaired.

The force application shall ensure the malleability of the pipe. The force shall be located according to 3.2.2.2.

**3.2.2.2 Attachment of Mufflers, Catalytic Converters and Diesel Particulate Filters.** The test piece shall be mounted such that the pipe connection is not impaired (see Figure 1).

The force application shall ensure the malleability of the pipe. A link with a Universal (U)-joint at the ends shall be installed between load cell and force application.

**3.3 Test Vehicle/Test Piece.** At least five (5) new production parts shall be tested for each pipe connection/type. The parts shall be produced as specified by assembly drawing. The pipe length shall be ≥ 200 mm, however

© Copyright 2021



Documents
Document Sharing Hub

Copyright General Motors
Provided by IHS Markit under license with General Motors

Full document details: GM GMW14390 2021

≤ 300 mm measured from pipe welding joint. Pipe connections shall be extended with a pipe as specified by drawing, if necessary. To the correct lug-in depth, tightening torque of the production clip shall be ensured, in order to guarantee a defined rigidity at the connection point.

Conditioning of parts, if applicable, shall be taken from the Component Technical Specification (CTS)/Drawing Specification.

**3.4 Test Time.** The actual test duration is dependent on specific test conditions.

| | |
|---|---|
| Calendar time: | 3 d |
| Test time: | 50 h |
| Coordination time: | 2 h |

**3.5 Test Required Information.** Component Technical Specification (CTS)/Drawing Specification.

**3.6 Personnel/Skills.** Technician basic skills needed:

- Ability to perform exhaust component changes.
- Skilled in test bench usage.

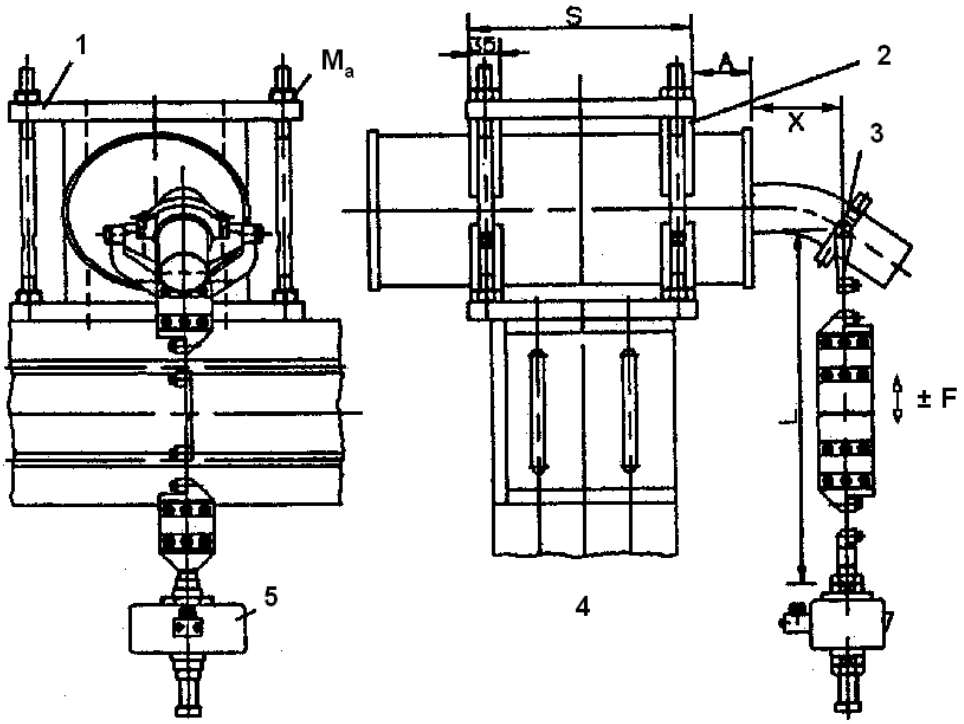


**Note:**
1 Base plates.
2 Clamping claws.
3 Force application.
4 Universal clamping system.
5 Force gauge 5 kN maximum.
A = Distance between bottom of pot and clamping claw A = 65 m.
L = The length of force application measured from load cell connection to the center of pipe connection shall be 150 mm minimum.
$M_a$ = The tightening torque of clamping claw shall be selected in such a way that the pot casing is neither deformed nor impaired.
S = Muffler clamping length S = 245 mm.
X = Lever arm measured from center of pipe welding joint to center of force application; X = 150 mm.

**Figure 1: Muffler Schematic**

© Copyright 2021



Documents
Document Sharing Hub
Copyright General Motors
Provided by IHS Markit under license with General Motors
Full document details: GM GMW14390 2021