GM	WORLDWIDE ENGINEERING STANDARDS	Test Procedure	GMW16591

Sunroof Anti-Pinch Procedure

1 Introduction

Note: Nothing in this standard supercedes applicable laws and regulations.

Note: In the event of conflict between the English and domestic language, the English language shall take precedence.

1.1 Purpose. This document is intended to test Anti-Pinch protection performance requirements of a sunroof system. This procedure contains the instructions for testing the Anti-Pinch protection, static and dynamic, and False Reversing of the sunroof in accordance with the different legal and GM specifications defined in the SSTS requirements.

1.2 Applicability. This procedure applies to all passenger cars and light duty trucks equipped with a sunroof with an automatic electrical drive and electronically controlled closing force limiter.

Deviations from the requirements of the test procedures shall have been agreed upon by the GSSLT. Such requirements shall be specified on component drawings, test certificates, reports, etc.

2 References

Note: Only the latest approved standards are applicable unless otherwise specified.

2.1 External Standards/Specifications.

2000/4/EC	CMVSS 118	FMVSS 118	UN R 21.01

2.2 GM Standards/Specifications.

GMW3172

2.3 Additional References.

- CG180 5-Phase Document
- GM1829 Analysis Development and Validation Plan and Report
- GM Security Guidelines. https://gmweb.gm.com/HR/Security/Pages/FutureGuide.aspx
- Program Specific Subsystem Technical Specification (SSTS)

3 Resources

3.1 Facilities. Specific test facility requirements are listed in each individual requirement and test procedure section. Alternative test facilities and equipment may also be used. However, all measuring variables as specified in this specification shall be determined correctly with respect to its physical definition. The test facilities shall be accredited to ISO/IEC standards or by the International Laboratory Accreditation Cooperation (ILAC).

A test track for dynamic road trials is required. Choose according to requirements.

3.1.1 Calibration. The test facilities and equipment shall be in good working order and shall have a valid calibration label.

3.1.2 Alternatives. Alternative test facilities and equipment may also be used. However, all measuring variables as specified in this standard shall be determined correctly with respect to their physical definition.

© Copyright 2016 General Motors Company All Rights Reserved

Documents
Document Sharing Hub

Copyright General Motors Company
Provided by IHS Markit under license with General Motors Company
Reproduction, distribution or publication of these standards is expressly prohib
Licensee=/, User=,
Not for Resale,
Full document details: GM GMW16591 2016

3.2 Equipment.

3.2.1 Thermometer; hygrometer.

3.2.2 Voltmeter.

3.2.3 Equipment for measuring the closing force for the relevant model for Sliding Positions and Tilt Positions with accessories for clamping, etc.

3.2.4 Measurement amplifier for closing force mechanism.

The equipment is used for measuring the Anti-Pinch force in the sliding position and ventilation position. Measurement sheets are needed for documentation (For Static Tests use Appendices B, C, and D. For Dynamic Tests use Appendices B, C, D, and E). The measured parameters are Pinch Force (Newton), spring deflection (millimeter), Environmental Temperature (Celsius), Voltage (Volt) of the electrical drive and Electrical Current (ampere) of the electrical drive.

3.3 Test Vehicle/Test Piece. Test samples shall be of production intent design and material for design validation (DV); or production intent design and materials manufactured with production processes (home line) for product validation (PV). Any changes to the components or material, e.g., design, fit, form, function, properties, manufacturing process, and/or location of manufacture require revalidation. GM shall approve validation methods for product/process changes before the supplier is committed to the change.

3.4 Test Time.

For Planning	Static Anti-Pinch	Dynamic Anti-Pinch
Calendar time:	14 d	14 d
Test hours:	20 h	50 h
Coordination hours:	48 h	48 h

3.5 Test Required Information. Requirements from the SSTS or respective specification are necessary in order to execute test methods in this document.

3.5.1 For Anti-Pinch Static and Dynamic Tests. The closing force shall not exceed F = 100 N, where F = force. There shall be no damage to the panel, roof sheeting, and other mechanical parts. Functionality shall be subsequently warranted.

3.5.2 False Reversing. The number of reversals is rated okay if it meets the requirements of the SSTS or applicable specifications. There shall be no damage to the panel, roof sheeting, and other mechanical parts. Functionality shall be subsequently warranted.

3.5.3 GM Validation is to be notified of test failures within a 24 h period of occurrence.

3.5.3.1 Supplier to develop a 5-Phase Document (CG180) for all test failures.

3.6 Personnel/Skills. The test facility shall have sufficient engineering resources and experience for performing the required tests.

4 Procedure

4.1 Preparation.

4.1.1 Dynamic and False Reversing.

4.1.1.1 Testing in Vehicle on Established Roads. This test procedure has been developed to reflect customer usage of markets which have more stable road systems and lesser amounts of unpaved and rough roads. (Appendices B, C, D, and E).

Other regional or local requirements may necessitate additional test options. For further information, consult regional Engineering Center.

4.1.2 Test Samples. All test samples shall be design intent components, which might affect Anti-Pinch behavior, and meet all functional and dimensional requirements. These include the components such as glass panel, frame, electrical drive, electronic components, wind deflector, sunshade, etc.

4.2 Conditions. All conditions specified shall be targeted toward the specified value with any given tolerance plus/minus (±) used to compensate for variation. During testing, conditions specified shall not be readjusted within the tolerance unless it is to maintain the particular test condition within the specified tolerance. If such an adjustment is made, it shall be approved by the applicable GM engineer prior to the start of any testing. For Anti-

© Copyright 2016 General Motors Company All Rights Reserved

Documents
Document Sharing Hub

Copyright General Motors Company
Provided by IHS Markit under license with General Motors Company
Reproduction, distribution or publication of these standards is expressly prohib
Licensee=/, User=,
Not for Resale,
Full document details: GM GMW16591 2016

Pinch tests, the tests shall be carried out at different operating voltages: - U_{min} = 9.5 V (U_{min} = 10.2 V for Global A Electrical Architecture), U_{eff} = 13.2 V and U_{max} = 16 V. The values specified in GMW3172 shall be used. The tests shall be carried out at different pinch gaps according the requirements specified in the SSTS.

The Road Conditions for Dynamic and False Reversing Tests (Appendix E):

- Washboard track (Rumbling Stripes), high (in phase and out of phase)
- Washboard track (Rumbling Stripes), low (in phase and out of phase)
- Belgian blocks
- Stone pavement rough; endurance test track; or other suitable test track
- Stone pavement, smooth; endurance test track; or other suitable test track
- Bumps; endurance test track; or other suitable test track
- High speed according SSTS requirements; circular Track; or other suitable test track

Unless otherwise specified, perform the tests in the as received condition without any special preconditioning.

4.2.1 Environmental Conditions. Symbol definitions required for test methods contained in this procedure are listed in Table 2. Actual requirement values for the symbols shall be obtained from the Subsystem Technical Specification (SSTS) or the respective specification and recorded on Data Sheet A1. If not otherwise specified, tests shall be performed at T_{room} = +23 °C ± 5 °C, where T_{room} is Room Temperature. If various temperature ranges for the tests are specified, the procedure shall be constructed, if not otherwise specified, in a way that all tests shall be performed first at T_{room} = +23 °C ± 5 °C, then at high temperature and lastly at low temperature. If not specified, the test parameter for relative humidity shall be set at 50% ± 5% and voltage set to U_{nom}, where U_{nom}, is nominal voltage.

The driving test can be performed in all types of weather. However, in situations where severe weather makes certain driving maneuvers unsafe, modules using those maneuvers shall be postponed until road conditions improve.

4.2.2 Test Conditions. Deviations from the requirements of this standard shall have been agreed upon. Such requirements shall be specified on component drawings, test certificates, reports, etc.

Such deviations shall be approved by the GM Validation Engineer and specified on the GM1829 Analysis Development and Validation Plan and Report and test reports. Reference Table 1 and the applicable product specification documents for definitions of allowed tolerances.

Table 1: Temperature and Voltage Parameters and Tolerances

Parameter	Tolerance
T_{min}	Specification ± 3 °C
T_{max}	Specification ± 3 °C
T_{RPS}	Specification +3 °C
T_{CS}	Specification +3 °C
T_{room}	+23 °C ± 5 °C
Test Time	Specification ± 0.5%
Room Ambient Relative Humidity	(30 to 70)%
Chamber Humidity	Specification ± 5%
Pulse with Modulation (PWM) Voltage	Specification +0.25 V
Voltage	Specification ± 0.25 V
Force (Loading)	Specification ± 5%
Distance (Excluding Dimensional Check)	Specification ± 5%

© Copyright 2016 General Motors Company All Rights Reserved

Documents
Document Sharing Hub
Copyright General Motors Company
Provided by IHS Markit under license with General Motors Company
Reproduction, distribution or publication of these standards is expressly prohib
Licensee=/, User=,
Not for Resale,
Full document details: GM GMW16591 2016

4.2.3 System Performance Conditions. Symbol definitions required for test methods contained in this procedure are listed in Table 2 and Appendix A. Actual requirement values for the symbols shall be obtained from the SSTS or the respective specification and recorded on Data Sheet A1.

Table 2: Temperature and Voltage Definitions

Phrase	Symbol	Definition
Minimum Temperature	T_{min}	Minimum limit value of the ambient temperature at which the component is required to operate.
Maximum Temperature	T_{max}	Maximum limit value of the ambient temperature at which the component is required to operate.
Repaint and Storage Temperature	T_{RPS}	Maximum temperature which can occur during repainting, but at which the component is not operated. Accounts for high temperature storage and paint booth exposure.
Maximum Temperature Retention	T_{HT}	High test temperature at which specific system components are expected to function (drain tube retention).
Cold Storage Temperature	T_{CS}	Minimum temperature which the system may experience but is not expected to operate at.
Room Temperature	T_{room}	Ambient room temperature.
Minimum Voltage	U_{min}	Minimum limit value of the supply voltage at which the component is required to operate during the test in Volts.
Nominal Voltage	U_{nom}	Nominal supply voltage at which the component is operated during the test in Volts.
Maximum Voltage	U_{max}	Maximum limit value of the supply voltage at which the component is required to operate during the test in Volts.

4.3 Instructions.

4.3.1 Pretest Requirements.

4.3.2 Anti-Pinch Protection (Static). Reference Figure 1 through Figure 4.

4.3.2.1 During the development phase, the functionality of the Anti-Pinch protection needs to be proven at each millimeter pinch space, at each voltage between the voltage range specified at the SSTS, at each temperature as specified at the SSTS and for the range of tolerance of the electrical drive for Sliding Position and Tilt Position.

4.3.2.2 During the development phase, the range of the pinch forces at room temperature +23 °C ± 5 °C shall be between 75 N and 80 N.

4.3.2.3 For documentation of the Measurement Results use the appropriate data sheet form in Appendices B, C, D, E and F. Provide graphs for the results similar to Figure G1 in Appendix G for all conditions.

© Copyright 2016 General Motors Company All Rights Reserved

Documents
Document Sharing Hub
Copyright General Motors Company
Provided by IHS Markit under license with General Motors Company
Reproduction, distribution or publication of these standards is expressly prohib
Licensee=/, User=,
Not for Resale,
Full document details: GM GMW16591 2016

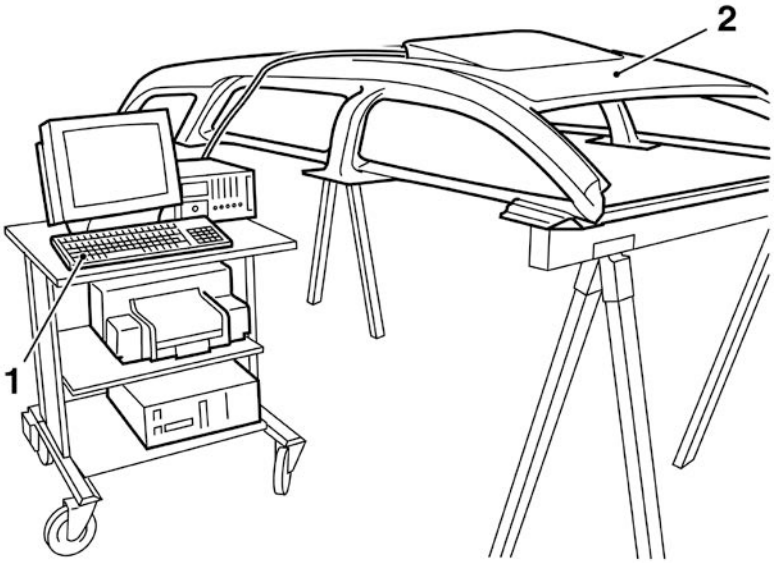

1 = Measurement station with Computer, Amplifier
2 = Roof section with Sunroof

Figure 1: Overview of Measurement Assembly

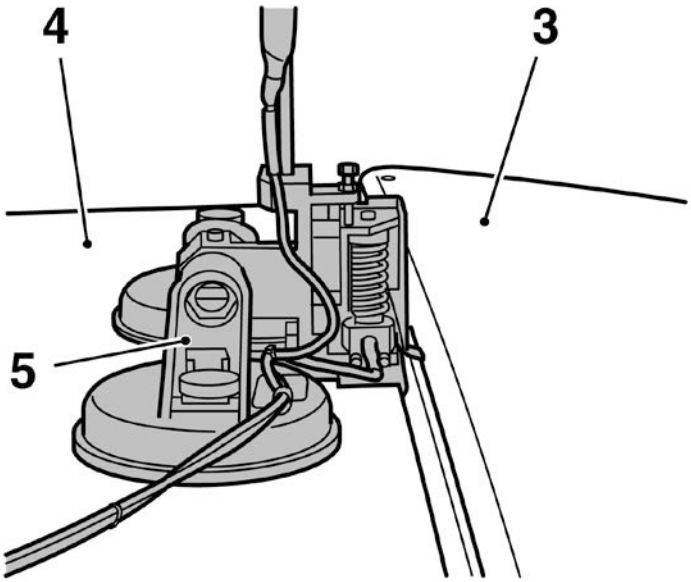

3 = Cover
4 = Roof sheet
5 = Measurement assembly for Tilt Position

Figure 2: Tilt Position Measurement Assembly for a Tilt and Slide Sunroof

© Copyright 2016 General Motors Company All Rights Reserved

Documents
Document Sharing Hub
Copyright General Motors Company
Provided by IHS Markit under license with General Motors Company
Reproduction, distribution or publication of these standards is expressly prohib
Licensee=/, User=,
Not for Resale,
Full document details: GM GMW16591 2016

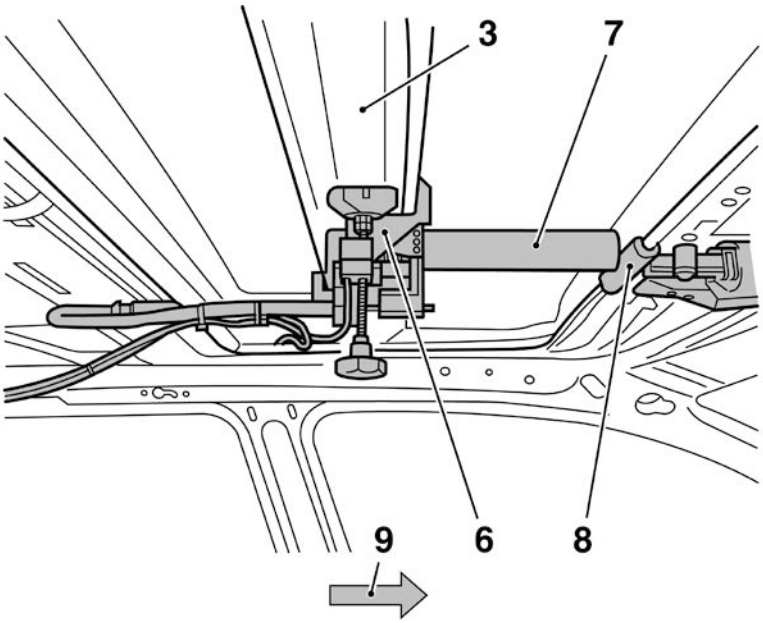

3 = Cover
6 = Measurement assembly for sliding position
7 = Clamping gap spacer
8 = Stop position (vehicle roof or weather strip)
9 = Driving direction

Figure 3: Sliding Position Measurement Assembly, View from Inside for a Tilt and Slide Sunroof

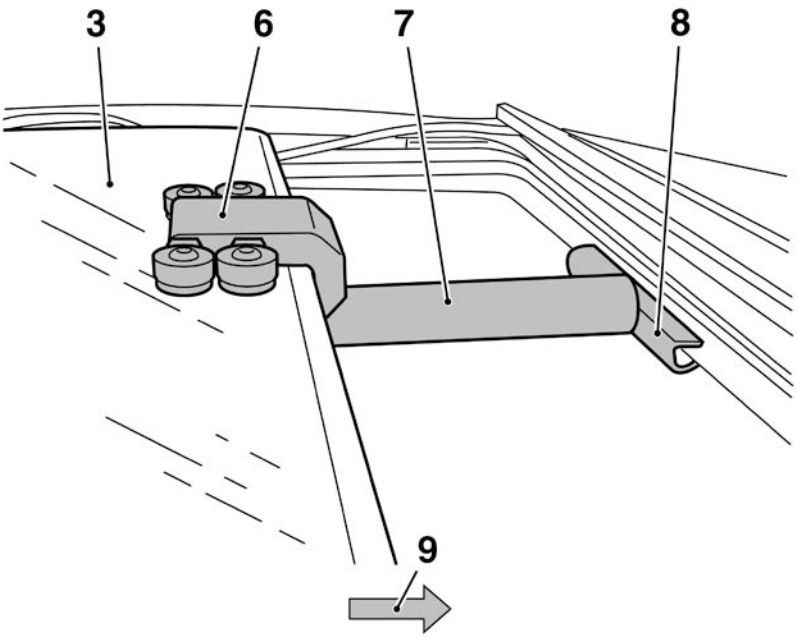

3 = Cover
6 = Measurement assembly for sliding position
7 = Clamping gap spacer
8 = Stop position (vehicle roof or weather strip)
9 = Driving direction

Figure 4: Sliding Position Measurement Assembly, View from Outside for a Tilt and Slide Sunroof

© Copyright 2016 General Motors Company All Rights Reserved

Documents
Document Sharing Hub
Copyright General Motors Company
Provided by IHS Markit under license with General Motors Company
Reproduction, distribution or publication of these standards is expressly prohib
Licensee=/, User=,
Not for Resale,
Full document details: GM GMW16591 2016

4.3.3 Sample Size. For both prototype (production intent) and production sunroofs:

4.3.3.1 Two (2) for the static tests.

4.3.3.2 Two (2) for the vehicle level tests (one for cold temperature and one for hot temperature).

5 Data

5.1 Calculations. Not applicable.

5.2 Interpretation of Results. The results are documented in a test report.

5.2.1 Description of procedure/prehistory.

5.2.2 Description of test piece with development status and part status.

5.2.3 Description of test preparation.

5.2.4 Description of test conditions.

5.2.5 Documentation of test results, if required using the data sheets in Appendices B, C, D, E and F.

5.3 Test Documentation. Samples of components or material released to this specification shall be tested for conformity with the requirements of this specification and approved by the responsible GM department prior to the start of delivery of production level components or materials.

Any change to the component or material, e.g., design, function, properties, manufacturing process and/or location of manufacture requires a new release of the product. It is the sole responsibility of the supplier to provide the customer, unsolicited, with documentation of any change or modification to the product/process, and to apply for a new release.

If not otherwise agreed to the entire verification test shall be repeated and documented by the supplier prior to start of delivery of the modified or changed product. In some cases a shorter test can be agreed to between the responsible GM department and the supplier.

All reports are to be submitted to GM in English.

6 Safety

This Engineering Standard may involve safety requirements for hazardous materials, the method of operations and equipment. This standard does not propose to address all the safety issues associated with its use. It is the responsibility of the user of this standard to ensure compliance with all appropriate safety and health practices. This would include any specific training that may be required. The safety and health standards include site specific rules and procedures, company rules and procedures, and Government Standards. Contact shall be made with the appropriate site Safety and Health personnel for further direction and guidance in these matters.

7 Notes

7.1 Glossary.

Learning Anti-Pinch Curve: Procedure to learn the sunroof glass lid or electrical sunshade basic load, to guarantee the Anti-Pinch force limitation.

Normalization: Procedure to learn the sunroof glass lid or electrical sunshade zero position and maximum open positions.

Slide Position: Position of the tilt and slide sunroof (TSS) in which the moving part of the roof drops under the roof skin towards the rear when opening.

Tilt Position: Position of the TSS in which the moving part of the roof is opened upwards at the rear edge.

Tilt and Slide Sunroof: Moving part of the roof (panel); passes below the roof skin in the opened position ([slide position] SP); enables the rear edge of the moving part to be opened upwards/outwards.

7.2 Acronyms, Abbreviations, and Symbols.

DV	Design Validation
GSSLT	Global Subsystem Leadership Team
HW	Hardware
ID No.	Identification Number
ILAC	International Laboratory Accreditation Cooperation

© Copyright 2016 General Motors Company All Rights Reserved

Documents
Document Sharing Hub

Copyright General Motors Company
Provided by IHS Markit under license with General Motors Company
Reproduction, distribution or publication of these standards is expressly prohib
Licensee=/, User=,
Not for Resale,
Full document details: GM GMW16591 2016

PV Product Validation
PWM Pulse with Modulation
RT Room (Ambient) Temperature
SP Slide Position
SSTS Subsystem Technical Specification
SW Software
TP Tilt Position
TSS Tilt and Slide Sunroof
VDC Validation Documentation Complete
VTC Validation Testing Complete
VTS Vehicle Technical Specification

8 Coding System

This standard shall be referenced in other documents, drawings, etc., as follows:

Test to GMW16591

9 Release and Revisions

This standard was originated in April 2011. It was first approved by Exterior GSSLT in July 2011. It was first published in July 2011.

Issue	Publication Date	Description (Organization)
1	JUL 2011	Initial publication.
2	DEC 2016	5 Year refresh – updated reference section, glossary, added calibration section, added 'alternatives' section, updated the test required information section. (Body – Roof Closures Global Subsystem Leadership Team)

© Copyright 2016 General Motors Company All Rights Reserved

Documents
Document Sharing Hub
Copyright General Motors Company
Provided by IHS Markit under license with General Motors Company
Reproduction, distribution or publication of these standards is expressly prohib
Licensee=/, User=,
Not for Resale,
Full document details: GM GMW16591 2016

Appendix A

Data Sheet A1: Specifications and Test Condition Definition

Part Name: _____ Part Number: _____
Program Name: _____ Test Location: _____
Test Date: _____

Temperature and Voltage	Symbol	Requirement Value Note 1
Minimum Temperature	T_{min}	-40 °C
Maximum Temperature	T_{max}	+90 °C
Repaint and Storage Temperature	T_{RPS}	+23 °C
Cold Storage Temperature	T_{CS}	-40 °C
Room Temperature	T_{room}	+23 °C
Minimum Voltage	U_{min}	9.5 V without Global A Architecture
Nominal Voltage	U_{nom}	13.2 V
Maximum Voltage	U_{max}	16 V

Note 1: Refer to Program SSTS for deviations to these values.

Voltage	Symbol	Without Global A Architecture	Global A Architecture
Minimum Voltage	U_{min}	9.5 V	10.2 V
Nominal Voltage	U_{nom}	13.2 V for Regions A/B/C	13.2 V for Regions A/B/C
Maximum Voltage	U_{max}	16.0 V for Regions A/B	14.4 V for Region C

© Copyright 2016 General Motors Company All Rights Reserved

--`,,```,,,,``-`-`,,`,,`,`,,`---
Documents
Document Sharing Hub
Copyright General Motors Company
Provided by IHS Markit under license with General Motors Company
Reproduction, distribution or publication of these standards is expressly prohib
Licensee=/, User=,
Not for Resale,
Full document details: GM GMW16591 2016