GM	WORLDWIDE ENGINEERING STANDARDS	Test Procedure	GMW17360

Tire Ride Modeling Tests for SWIFT using Flat-Trac Equipment

1 Introduction

Note: Nothing in this standard supercedes applicable laws and regulations.

Note: In the event of conflict between the English and domestic language, the English language shall take precedence.

1.1 Purpose. This standard is written to describe, in general terms, all tests required for SWIFT tire modeling input, as specifically run on the Flat-Trac equipment (LTRe, CT+, Flat-Trac equipment, or equivalent). (Model designation available from MTS Systems Corporation.) The data generated by this test is used to create SWIFT models for vehicle simulations of ride performance.

1.2 Applicability. It is restricted to controlled laboratory tests on passenger and light truck tires.

1.3 Remarks.

1.3.1 The tire Force and Moment (F&M), dynamic cleat, and other properties, addressed in this test, are important to various vehicle simulation groups, since these tire properties will dictate to a great extent the vehicle's response to specific control inputs.

1.3.2 Tire properties addressed in this test are dependent upon almost every physical characteristic of a tire including the tire structure, compounds, and tread design. Tire properties addressed in this test are also dependent upon the usage environment such as the load, inflation pressure, rim width, speed, state of wear, surface texture, temperatures, tire age, storage history, and usage history. This is pointed out to emphasize the need to be diligent in the selection of test tires, their storage conditions, and attention to detail in following good test practices outlined in this procedure.

1.3.3 The quantification of tire properties addressed in this test requires the measurement of the net resultant forces and moments from stresses within the tire footprint area. This implies the footprint dynamics on the measurement equipment must be similar to those experienced under actual vehicle operation. Therefore, a flat surface machine using a textured surface is required.

2 References

Note: Only the latest approved standards are applicable unless otherwise specified.

2.1 External Standards/Specifications.

None

2.2 GM Standards/Specifications.

GMW17359

2.3 Additional References.

- European Tyre and Rim Technical Organization (ETRTO) Yearbook, Brussels, Belgium (www.etrto.org)
- MathWorks, Incorporated, Natick, Massachusetts (www.mathworks.com)
- MTS Systems Corporation, Eden Prairie, Minnesota (www.mts.com)
- The Tire and Rim Association (T&RA) Yearbook, Copley, Ohio (www.us-tra.org)
- TYDEX Format Reference Manual, Release 1.3 (https://www.fast.kit.edu/download/DownloadsFahrzeugtechnik/TY100531_TYDEX_V1_3.pdf)

© Copyright 2016 General Motors Company All Rights Reserved

Documents
Document Sharing Hub

Copyright General Motors Company
Provided by IHS Markit under license with General Motors Company
Reproduction, distribution or publication of these standards is expressly prohib
Licensee=/, User=,
Not for Resale,
Full document details: GM GMW17360 2016

3 Resources

3.1 Facilities. MTS LTRe, CT+, Flat-Trac equipment, or equivalent, equipped test facility.

3.1.1 Calibration. The test facilities and equipment shall be in good working order and shall have a valid calibration label.

3.2 Equipment.

3.2.1 Equipment used for all of the tests described in this procedure, consist of a Flat-Trac machine built to the specifications in 3.2.1.1.

3.2.1.1 Specifications of the machine are dependent on the range of the tires and fidelity of the data. If large truck tires are required, then higher load capacity is required. The stiffness of the equipment has to be high enough to not significantly affect the model results.

3.2.2 Three enveloping obstacles (cleats), built to the descriptions in Table 1, and shown in Figures 1 through 3.

Table 1: Cleat Descriptions

Cleat	Size (Description)
Trapezoidal	10 mm × 30 mm
Triangular	30 mm × 210 mm
Semi-Cylinder	20 mm radius

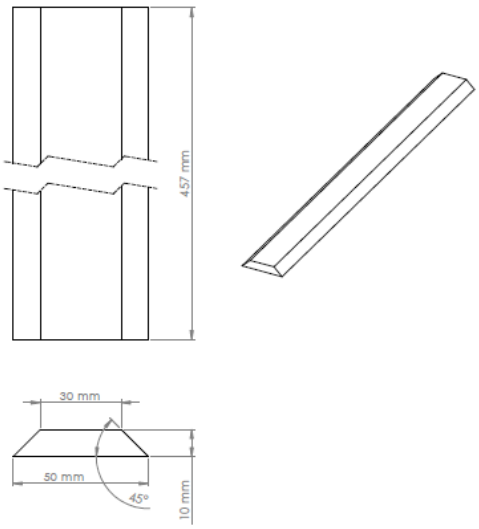

Figure 1: Trapezoidal Cleat

© Copyright 2016 General Motors Company All Rights Reserved

Documents
Document Sharing Hub
Copyright General Motors Company
Provided by IHS Markit under license with General Motors Company
Reproduction, distribution or publication of these standards is expressly prohib
Licensee=/, User=,
Not for Resale,
Full document details: GM GMW17360 2016

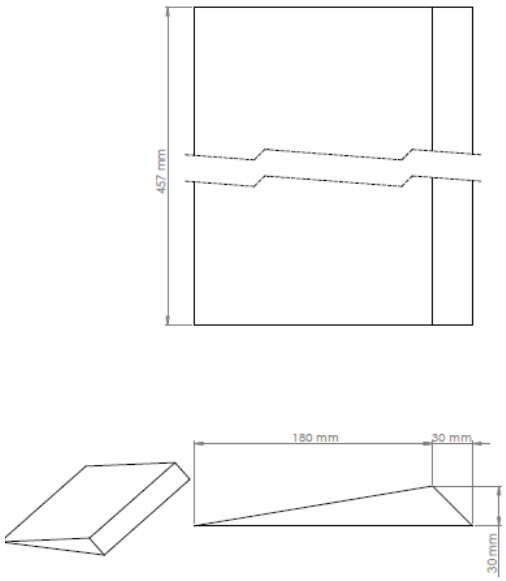

Figure 2: Triangular Cleat

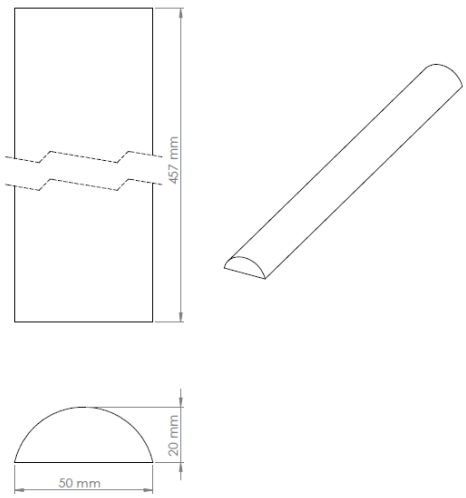

Figure 3: Semi-Cylinder Cleat

3.3 Test Vehicle/Test Piece.

3.3.1 Tire Test Specimen. The new tires must be free of all tags, tape, or other foreign material in the tread area.

3.3.2 Test Wheel. The wheel must be selected properly to facilitate correct test results. The wheel must be of the correct diameter, the width must match that requested on the test request, and the rim flange contour must be approved by the appropriate standardizing body, e.g., reference European Tyre and Rim Technical Organization (ETRTO) Yearbook, current year, The Tire & Rim Association (T&RA) Yearbook, current year, or equivalent. A General Motors approved wheel is preferred for the testing. The wheel composition (e.g., aluminum/steel) is specified by the test requestor.

© Copyright 2016 General Motors Company All Rights Reserved

Documents
Document Sharing Hub

Copyright General Motors Company
Provided by IHS Markit under license with General Motors Company
Reproduction, distribution or publication of these standards is expressly prohib
Licensee=/, User=,
Not for Resale,
Full document details: GM GMW17360 2016

3.3.3 Test Surface. The flat test surface must be free of foreign material including, but not limited to oils, rubber dust, and other deposits from previous usage. The flat surface abrasive material is 120-grit 3M-ite. The surface macro texture is reduced prior to the initial use, requiring eight (8) passes of the stoning roller over the surface before use, or equivalent.

3.3.4 Sample Size. Six (6) tires (5 + 1 spare) are required.

3.4 Test Time. Estimated test time of 6 h which includes raw machine time, tire, belt, and adapter changes.

3.5 Test Required Information. Required information includes tire size, construction number, load rating, service description, wheel width, test load, and test pressure. If a specific wheel is provided, the wheel part number should also be provided. Additional information required may vary by test site.

3.6 Personnel/Skills. Test operator should have adequate training and be familiar with the local operator's procedure.

4 Procedure

4.1 Preparation.

4.1.1 Store the tires prior to test in a staging area with the ambient temperature within ± 5 °C of the test room temperature for at least 24 h prior to testing.

4.1.2. Inspect the tire bead and the bead seat of the wheel to ensure this interface is free of damage, defects, and foreign material. Clean or replace test pieces as necessary.

4.1.3 Use only a thin film of an approved mounting lubricant to facilitate proper tire mounting and bead seating. Excessive mounting lubricant can cause slippage at the tire and rim interface during testing.

4.1.3.1 Inspect the bead area of the mounted tire and wheel assembly to ensure the tire bead is firmly seated on the wheel.

4.1.3.2 Inflate the tire and wheel assembly 30 kPa above the required test inflation pressure and allow the tire to stabilize at room temperature prior to testing while the previous tire is being tested. Wait at least 1 h before running the test to let the tire pressure stabilize.

4.1.3.3 Using a paint pen or similar instrument, place an arrow on the sidewall of the tire pointing at the location of the valve stem of the wheel. The relative location of this mark to the valve stem is to be noted posttest.

4.2 Conditions.

4.2.1 Environmental Conditions. The ambient temperature in the room where the measurement equipment is operating shall be controlled to 21 °C ± 3 °C to minimize the thermal gradients within the test equipment and instrumentation.

4.2.2 Test Conditions. Deviations from the requirements of this standard shall have been agreed upon. Such requirements shall be specified on component drawings, test certificates, reports, etc.

The determination of the test conditions is discussed in 3.5.

4.3 Instructions.

4.3.1 Force and Moment (F&M) Tests.

4.3.1.1 General Information. The F&M part of the GMW17360 test is determined by the CompTire Force and Moment (GMW17359) companion test. The relevant parts of the CompTire test are shown in Table 2.

Table 2: Tests and Procedures

Test Name	Procedure
Pure Drive Brake - Long Slip	CompTire, GMW17359
Pure Cornering – Side Slip	CompTire, GMW17359
Combined Slip	CompTire, GMW17359
Rolling Radius	CompTire, GMW17359
Longitudinal Transient Behavior	CompTire, GMW17359

© Copyright 2016 General Motors Company All Rights Reserved

Documents
Document Sharing Hub
Copyright General Motors Company
Provided by IHS Markit under license with General Motors Company
Reproduction, distribution or publication of these standards is expressly prohib
Licensee=/, User=,
Not for Resale,
Full document details: GM GMW17360 2016

Test Name	Procedure
Lateral Transient Behavior	CompTire, GMW17359
Rotational Inertia	Section 4.3.2, Appendix C, Figure C1
Footprint Test	Section 4.3.3
Yaw Stiffness	Section 4.3.4, Appendix D, Figure D1
Slow Speed Enveloping	Section 4.3.5
High Speed Cleat Impact	Section 4.3.6, Appendix E, Figure E1

4.3.1.1.1 Tire Warm-up. Each tire used will be conditioned prior to testing using the appropriate tire warm-up sequence (see GMW17359) based on the tire type and intended vehicle application.

4.3.1.1.2 The tire type will determine the magnitude of the maximum slip angle excursions executed during the sequence. This maximum slip angle is targeted to be approximately 75% of the slip angle at which the tire achieves peak lateral force at the nominal test load. The tire types for the purpose of choosing the warm-up sequence are passenger car, performance tires, and tires used on light trucks. Passenger car tires are those used on passenger car vehicles with a speed rating of V (240 km/h (149 mph)) or lower. Performance tires are those tires used on passenger car vehicles with a speed rating of W (270 km/h (168 mph)) or higher, including Z rated tires. Tires used on light trucks can include both passenger car tires and light truck or commercial tires. The distinguishing factor is their intended application is on a light truck vehicle.

4.3.1.1.3 Following the tire warm-up sequence each of the four (4) test tires will be tested with a series from one (1) to three (3) specific test sequences as defined further in the Appendices C, D, and E, and in GMW17359. The test sequences for each of the test tires are designed to solicit tire responses to specific inputs to the tire while managing the overall state of the tire to the extent possible (e.g., tire temperature, tread temperature, and tread wear).

4.3.1.1.4 There are three (3) different test sequences depending on the tire type being tested. The test sequence can be chosen from Table 3.

Table 3: CompTire (GMW 17359) Test for Test Tire Type

Test Tire Type	CompTire Test Sequence Location
Passenger Car Tires, Speed Symbol V or Lower	GMW17359 Appendix Table titled Passenger Car Sequences
Performance Tires, Speed Symbol W or Greater	GMW17359 Appendix Table titled Performance Sequences
Tires for Use on Light Truck Vehicles	GMW17359 Appendix Table titled Light Truck Sequences

4.3.1.2 Analysis procedure. The data is converted into TYDEX format for data analysis. See GMW17359 for more details.

4.3.2 Rotational Inertia Test.

4.3.2.1 General Information. The rotational inertia test is a fully automated Loaded Radius (RL) and Spindle Rotation Speed (VSD) controlled test. The test is located in the “Tire Models” tire definition and needs to be built with the current test tire. During the test, the spindle will move to an RL of 500 mm and then vary the VSD through a predetermined range of accelerations. The rotational inertia test is repeated with three (3) configurations shown in Table 4. This test is performed at zero (0) tire pressure.

4.3.2.2 Procedure. Appendix C, Figure C1, illustrates the automated test and Table 4 shows the conditions that need to be tested.

© Copyright 2016 General Motors Company All Rights Reserved

Documents
Document Sharing Hub

Copyright General Motors Company
Provided by IHS Markit under license with General Motors Company
Reproduction, distribution or publication of these standards is expressly prohib
Licensee=/, User=,
Not for Resale,
Full document details: GM GMW17360 2016