GM	WORLDWIDE ENGINEERING STANDARDS	General Specification	GMW18082

Connections for Hydraulic Fluid Power and General Use — M08 and M10 Ports and Stud Ends with Metric Threads and O-Ring Sealing

1 Introduction

Note: Nothing in this standard supercedes applicable laws and regulations.

Note: In the event of conflict between the English and domestic language, the English language shall take precedence.

1.1 Purpose. Provide the dimensions for the M08 and M10 connections to be used in lieu of those defined in ISO 6149: Connections for hydraulic fluid power and general use — Ports and stud ends with ISO 261 metric threads and O-Ring sealing.

It has been determined that the M08 and M10 connections are not robust to tolerance stack. After performing a Monte Carlo simulation, the potential exists that a “Maximum” O-Ring would exceed 100% of a corresponding “Minimum” Groove volume at 23 °C. This would cause the O-Ring to hydraulic lock in the joint and thus allow the torque specification to be met without actually closing or loading the interface. Thermal cycling and vibration could lead to the component backing out due to insufficient clamp load.

1.2 Applicability. Vehicle, Powertrain, Sub-Assemblies, Test Laboratories, Assembly Plants, Vendor Supplied Equipment (pumps, motors, valves, cylinders, etc.)

1.3 Remarks. Figure 1 through Figure 3 and Table 1 through Table 5 are from ISO 6149. Reference ISO 6149 for complete details for Figures and Tables. Recommended modifications to the dimensions are shown in red in the Table 1 through Table 5. This standard does not modify the O-Ring or the opposing sealing surfaces; therefore, the performance of these connections is unchanged.

2 References

Note: Only the latest approved standards are applicable unless otherwise specified.

2.1 External Standards/Specifications.

ISO 261	ISO 6149-2	ISO 6149-4	ISO 7789
ISO 6149-1	ISO 6149-3		

2.2 GM Standards/Specifications.

GMW3059

2.3 Additional References. None.

3 Requirements

3.1 Usage Definition.

In hydraulic fluid power systems, power is transmitted and controlled through a liquid under pressure within an enclosed circuit. In general applications, a fluid (liquid or gas) may be conveyed under pressure.

Components are connected through their threaded ports by fluid conductor connectors to tubes and pipes or to hose connectors and hoses.

Ports are an integral part of fluid power components, such as pumps, motors, valves, cylinders, etc.

General Motors Company All Rights Reserved

Documents
Document Sharing Hub
Copyright General Motors
Provided by IHS Markit under license with General Motors
Full document details: GM GMW18082 2019

3.2 Product Characteristics.

3.2.1 Performance Requirements.

- See ISO 6149.

3.2.2 Physical Characteristics.

- See ISO 6149.

3.2.2.1 Dimensions and Capacity.

- See ISO 6149: For all dimensions, tolerances and surface finishes not covered.

3.2.2.1.1 Modifications to ISO 6149-1.

The L_1 dimension, shown in Figure 1, is changed from 1.6 mm to 2.4 mm.

Figure 1: Port

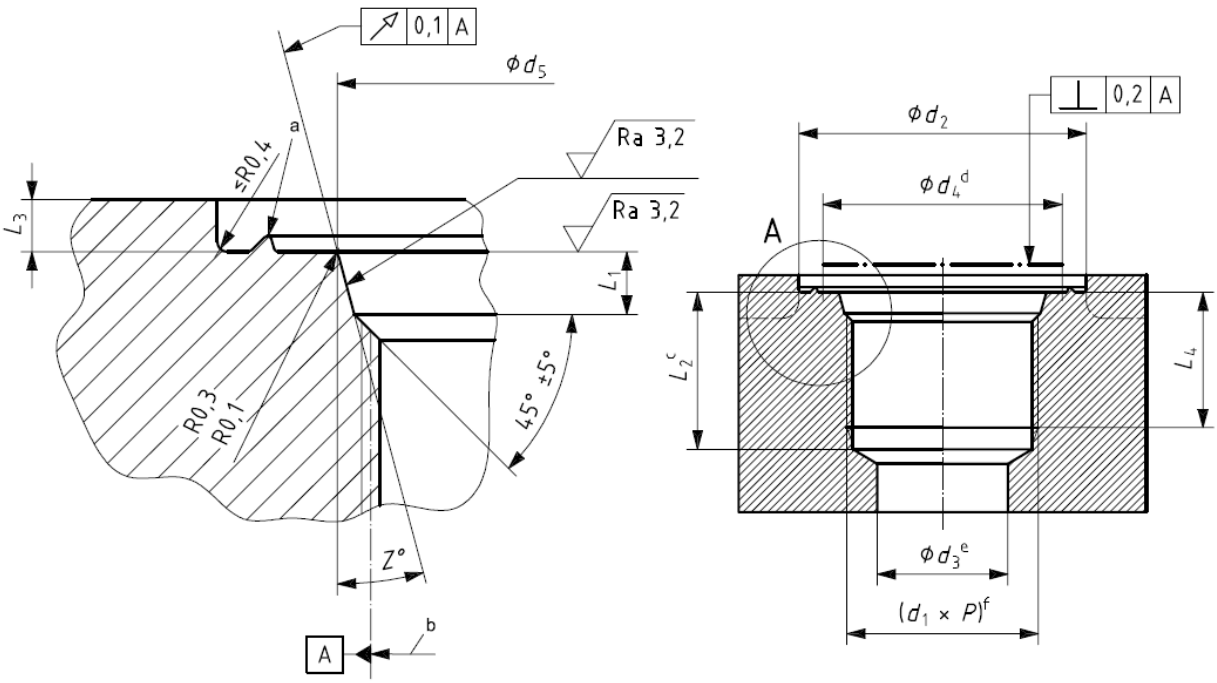

a Optional identification of port
b Pitch diameter.
c This dimension only applies when tap drill cannot pass through entire boss.
d Gauging.
e Reference only.
f Thread.

Table 1: Port Dimensions

Dimensions in millimetres

Thread[a] ($d_1 \times P$)	d_2 wide[d] min.	d_2 narrow[e] min.	d_3[b] ref.	d_4	d_5 $^{+0,1}_{0}$	L_1 $^{+0,4}_{0}$	L_2[c] min.	L_3 max.	L_4 min.	$Z°$ ± 1°
M8 × 1	17	14	3	12,5	9,1	2,4	11,5	1	10	12
M10 × 1	20	16	4,5	14,5	11,1	2,4	11,5	1	10	12

General Motors Company All Rights Reserved

Documents
Document Sharing Hub
Copyright General Motors
Provided by IHS Markit under license with General Motors
Full document details: GM GMW18082 2019

3.2.2.1.2 Modifications to ISO 6149-2 and ISO 6149-3.

The L_6 dimension, shown in Figure 2, is changed from 2.0 mm to 2.4 mm.

Figure 2: Non-Adjustable Heavy-Duty (S Series) Stud End

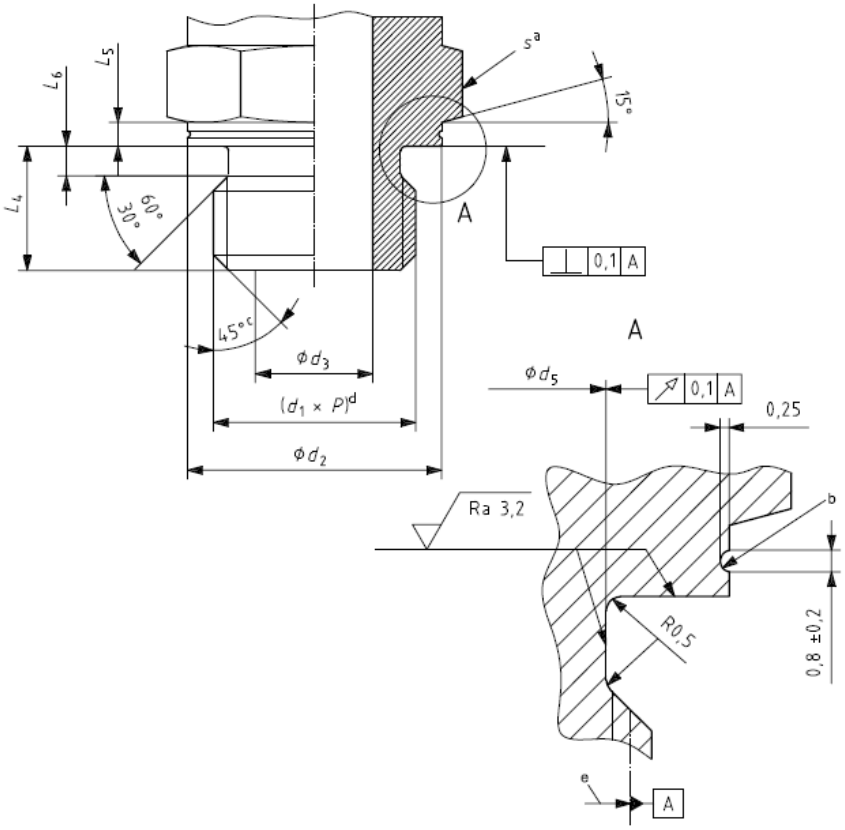

a Width across flats

b Notch of optional shape, centrally located on L_5; required for identification of metric stud end.

c Chamfer to minor diameter of thread.

d Thread.

e Pitch diameter

General Motors Company All Rights Reserved

Documents
Document Sharing Hub
Copyright General Motors
Provided by IHS Markit under license with General Motors
Full document details: GM GMW18082 2019