GM	WORLDWIDE ENGINEERING STANDARDS	General Specification	GMW3272

Hexalobular Socket Round Flanged Head Screws, for Plastics Product Grade A

1 Introduction

1.1 Purpose. This standard specifies the characteristics of hexalobular socket round flanged head screws for plastics.

1.2 Applicability. The screws covered by this specification are suitable for use in general engineering and nonstructural attachments.

1.3 Remarks. Designation: GMW3272 thread × 1.

Example: GMW3272 SP 4 × 25.

Where:

SP = Screw Plastic

2 References

Note: Only the latest approved standards are applicable unless otherwise specified.

2.1 External Standards/Specifications.

ISO 4759-1	ISO 10664	ISO/TS 16949

2.2 GM Standards/Specifications.

GMW25	GMW3044	GMW3059

2.3 Additional References. None.

3 Requirements

3.1 Dimensions. See Figures 1, 2 and 3 and Tables 1 and 2.

Figure 1: Screw, Round Flanged Head, for Plastics

© Copyright 2016 General Motors Company All Rights Reserved

Documents
Document Sharing Hub

Copyright General Motors Company
Provided by IHS Markit under license with General Motors Company
Reproduction, distribution or publication of these standards is expressly prohib
Licensee=/, User=,
Not for Resale,
Full document details: GM GMW3272 2016

Figure 2: Dimension Illustration

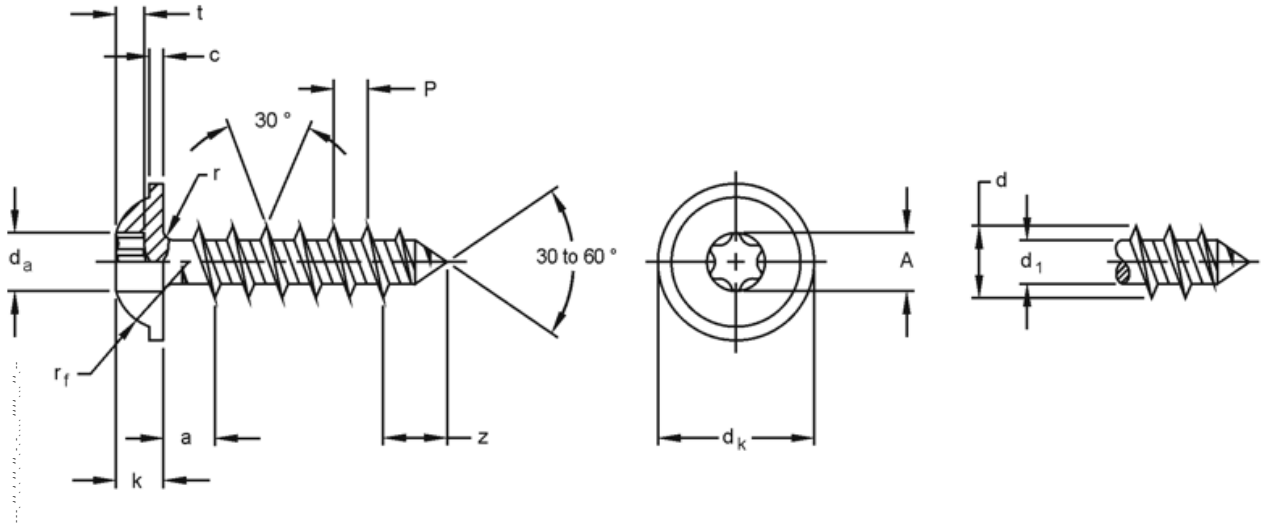

Table 1: Dimensions

Thread	d	SP 4	SP 6
P	Pitch	1.8	2.7
a Note 1	Maximum	4	6
c	-	0.8	1.2
d	Maximum	4.2	6.2
	Minimum	3.95	5.95
d_1	-	2.5	3.7
d_a Note 2	Maximum	4.7	6.8
d_k	Nominal = Maximum	8	12
	Minimum	7.64	11.57
k	Nominal = Maximum	2.8	3.8
	Minimum	2.4	3.4
r	Minimum	0.2	0.25
r_f	-	3.4	5.5
z Note 3	Maximum	5.0	7.2
Hexalobular Socket	**Number**	**T20**	**T25**
	A reference	3.95	4.5
t	Maximum	1.6	2.0
	Minimum	1.3	1.6

Note 1: Distance from the underside of the head to the first major diameter of the thread within specified limits.
Note 2: Transition diameter.
Note 3: Length of incomplete thread.
Note: All dimensions in millimeters (mm).

© Copyright 2016 General Motors Company All Rights Reserved

Documents
Document Sharing Hub
Copyright General Motors Company
Provided by IHS Markit under license with General Motors Company
Reproduction, distribution or publication of these standards is expressly prohib
Licensee=/, User=,
Not for Resale,
Full document details: GM GMW3272 2016