GM WORLDWIDE ENGINEERING STANDARDS	Test Procedure	GMW14242

Laboratory Evaluation of Front Windshield Wiper and Washer Sounds

1 Introduction

Note: Nothing in this standard supercedes applicable laws and regulations.

Note: In the event of conflict between the English and domestic language, the English language shall take precedence.

1.1 Purpose. This procedure describes a laboratory method for evaluating the noise of the front windshield wiper and washer system when mounted on a fixture.

1.2 Applicability. Passenger vehicles and on-road vehicles equipped with front windshield wiper and washers.

1.3 Remarks. The noise of the front windshield wiper and washer system during operation is evaluated using the Zwicker loudness method.

Each of the modes of operation (front windshield wiper low and high speed) and continuous operation of the washer pump are evaluated independently and then the results from each mode are compared together. For power accessory systems that have multiple modes of operation, an attribute indicating good quality is consistency among the modes. Therefore, it is important that the sound of each mode be nearly the same.

This method does not evaluate all the sound quality issues that may occur during the front windshield wiper and washer operation such as grating sounds, sandy/gravelly sounds, etc., any of which can make a front windshield wiper and washer system, with acceptable loudness, unacceptable for use in the vehicle.

This method does not evaluate the structure-borne sound that can result when the front windshield wiper and washer system is mounted to a vehicle. It is assumed that the front windshield wiper and washer system that has poor sound quality in a laboratory situation will also have poor sound quality when mounted on the vehicle. Identification of airborne noise problems using a laboratory test is an efficient use of resources because it does not require a full vehicle.

2 References

Note: Only the latest approved standards are applicable unless otherwise specified.

2.1 External Standards/Specifications.

None

2.2 GM Standards/Specifications.

GMW14155

3 Resources

3.1 Facilities.

3.1.1 Calibration. The test facilities and equipment shall be in good working order and shall have a valid calibration label.

3.1.2 Alternatives. Alternative test facilities and equipment may also be used. However, all measuring variables as specified in this standard shall be determined correctly with respect to their physical definition.

3.1.3 Test Room. Details given in GMW14155.

3.1.4 Test Fixture. Use a fixture with design intent windshield to mount the front windshield wiper and washer in vehicle position using design intent attachments.

3.2 Equipment. Details given in GMW14155.

© Copyright 2017 General Motors Company All Rights Reserved

Documents Document Sharing Hub

Copyright General Motors Company
Provided by IHS Markit under license with General Motors Company
Reproduction, distribution or publication of these standards is expressly prohib
Licensee=/, User=,
Not for Resale,
Full document details: GMW GMW14242 2017

3.3 Test Vehicle/Test Piece. Design intent front windshield wiper and washer assembly.

3.4 Test Time.

Calendar time:	1 to 2 days
Test hours:	1 to 2 hours
Coordination hours:	1 to 2 hours

3.5 Test Required Information. Unless otherwise specified the voltage setting for the Direct Current (DC) power supply shall be 14.0 VDC ± 0.5 VDC.

3.6 Personnel/Skills. Details given in GMW14155.

4 Procedure

4.1 Preparation.

4.1.1 General preparation given in GMW14155.

4.1.2 Mount the front windshield wiper and washer subsystem on the test fixture.

4.1.3 Position the front windshield wiper or washer system and fixture in the center of the test room.

4.1.4 Connect the electrical power to the front windshield wiper and washer subsystem using an appropriate cable and control switch. The power supply and controls must be located outside the test room. Adjust to the voltage specified in the requirement.

4.1.5 Mount the microphone and preamp on the microphone stand.

4.1.6 Connect the preamp to the microphone power supply via an extension cable.

4.1.7 Connect the power supply Alternating Current ((AC) output) to the sound recording system. The sound recording system and controls must be located outside the test room if they make noise that will interfere with the test.

4.1.8 Calibrate the microphone, power supply, and digital recording system as described in GMW14155.

4.1.9 Position the microphone as shown in Figure 1, Figure 2, Figure 3, Figure 4, and Figure 5. The microphone shall be pointed in a manner that is perpendicular to the front windshield wiper assembly and facing forward in car position. The microphone should be pointed at the washer motor. The tolerance for all microphone position distances is ± 20 mm.

Figure 1: Microphone Location

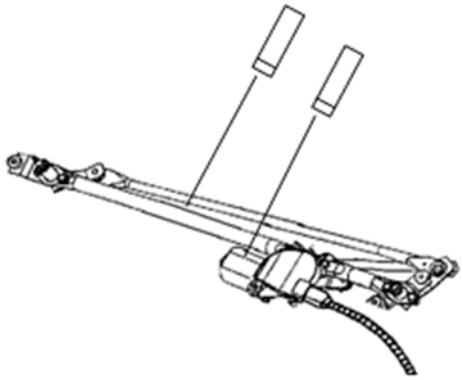

© Copyright 2017 General Motors Company All Rights Reserved

Documents
Document Sharing Hub

Copyright General Motors Company
Provided by IHS Markit under license with General Motors Company
Reproduction, distribution or publication of these standards is expressly prohib
Licensee=/, User=,
Not for Resale,
Full document details: GMW GMW14242 2017