GM WORLDWIDE ENGINEERING STANDARDS	Test Procedure	GMW14277

Measurement of Rear End Bending Stiffness

1 Introduction

Note: Nothing in this standard supercedes applicable laws and regulations.

Note: In the event of conflict between the English and domestic language, the English language shall take precedence.

1.1 Purpose. Determination of static rear end stiffness.

1.2 Applicability. For all body frame integral (BFI) passenger vehicles.

The test vehicle section will describe the components required for this procedure.

2 References

Note: Only the latest approved standards are applicable unless otherwise specified.

2.1 External Standards/Specifications.

None

2.2 GM Standards/Specifications.

None

3 Resources

3.1 Facilities. Rear end bending device (for vertical application of force).

3.1.1 Calibration. The test facilities and equipment shall be in good working order and shall have a valid calibration label.

3.1.2 Alternatives. Alternative test facilities and equipment may also be used. However, all measuring variables as specified in this standard shall be determined correctly with respect to their physical definition.

3.2 Equipment.

3.2.1 Test plate (clamping plate 5 m x 3 m).

3.2.2 Measuring amplifier with at least 1 channel.

3.2.3 One (1) load cell (1 x 1000 kg).

3.2.4 Eighty (80) gauges (range 10 mm, accuracy 0.01 mm) or linear potentiometer.

3.2.5 Sixty (60) magnetic mounts.

3.2.6 Eight (8) gauge extensions.

3.2.7 Axle supports.

3.2.8 Measuring plates with fastening material.

3.2.9 Crossbeams for application of force.

3.3 Test Vehicle/Test Piece. Body in white (BIW) with fenders and all reinforcing components, e.g., steering crossmember, screw-mounted front crossmember (hard bolted), subframe, rear axle in vehicles with torsion bar suspension, bumper beams, tower braces, IP beam, tunnel braces, radiator braces, rear seat braces, all fixed glass, and when testing convertible vehicles add doors if wedges are used. All items added to the BIW will be noted on the test log sheet.

3.4 Test Time. Varies by program.

3.5 Test Required Information. Not applicable.

GM Confidential

© Copyright 2016 General Motors Company All Rights Reserved

Documents
Document Sharing Hub

Copyright General Motors Company
Provided by IHS Markit under license with General Motors Company
Reproduction, distribution or publication of these standards is expressly prohib
Licensee=/, User=,
Not for Resale,
Full document details: GMW GMW14277 2016

3.6 Personnel/Skills. Not applicable.

4 Procedure

4.1 Preparation.

4.1.1 Setting Up the Body.

4.1.1.1 Basis of measurement is the test plate.

4.1.1.2 Place the body in white on the test plate (on wooden blocks).

4.1.1.3 Using production release urethane attach all fixed glass: front (windshield), rear window (in case notchback vehicles) and fixed side glass (do not include pop-out windows).

4.1.1.4 Vertical adjustable fixation of front and rear crossbar on test plate.

4.1.1.5 In vehicles with front wheel drive, install subframe and suspension arms.

A rigid connection shall be produced between outer suspension arms (around the ball joint) and the center of the shock absorber bearing in the tower (see Figure 1).

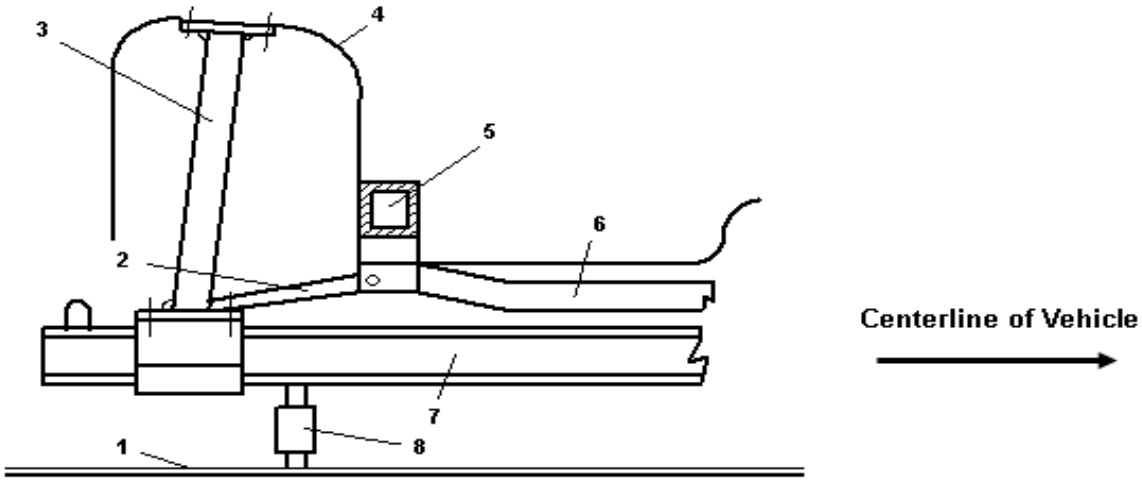

Note:
1 Bed plate
2 Suspension arm
3 Tube
4 Strut towers
5 Front longitudinal
6 Subframe
7 Front bar
8 Vertical adjustable support

Figure 1: Body Fixation on Front Crossbar

4.1.1.6 Front End Fixation. Fixation of rigid tower connection on front cross bar in all 3 translational degrees of freedom.

4.1.1.7 Rear End Fixation. The rear end fixation is depended on the rear axle construction (see Figure 2 and Figure 3). Rear spring seats (Left Hand (LH) and Right Hand (RH)) are fixed in vertical degree of freedom.

4.1.1.7.1 Rear axle with spring strut or separate spring damper unit. Establish rigid connection between spring seat and rear crossbar (see Figure 2).

© Copyright 2016 General Motors Company All Rights Reserved

Documents
Document Sharing Hub
Copyright General Motors Company
Provided by IHS Markit under license with General Motors Company
Reproduction, distribution or publication of these standards is expressly prohib
Licensee=/, User=,
Not for Resale,
Full document details: GMW GMW14277 2016

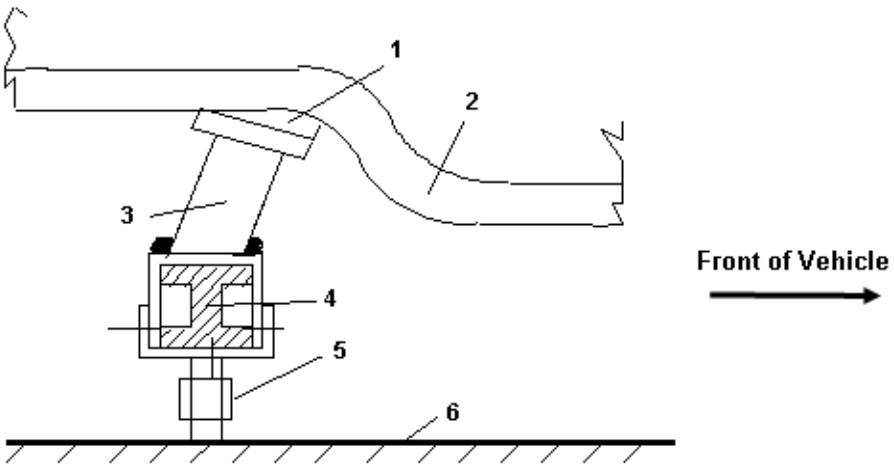

Note:
1 Spring seat
2 Rear longitudinal
3 Support
4 Rear cross bar
5 Height adjustable support
6 Bed plate

Figure 2: Fixation of Rear Support

4.1.1.7.2 Spring Seat on Rear Axle Carrier. Mounting of rear axle carrier and establish a rigid connection between spring seat and rear cross bar.

4.1.1.7.3 Torsion Bar Rear Axle. Installation of the complete rear axle in vehicles with torsion bar suspension. Support shall be effected at the wheel hub.

Furthermore, the steering knuckles shall be secured to prevent twisting. This shall be achieved by producing a rigid connection between the shock absorber supports (see Figure 3).

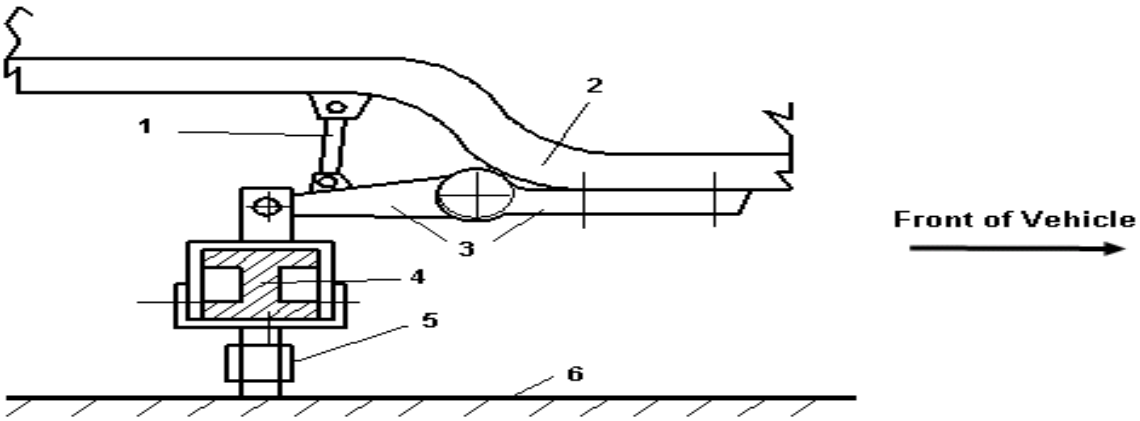

Note:
1 Support at shock absorber fixation
2 Rear longitudinal
3 Torsion bar suspension
4 Rear crossbar
5 Height adjustable support
6 Bed plate

Figure 3: Fixation of Rear Support on Vehicles with Torsion Bar Suspension

© Copyright 2016 General Motors Company All Rights Reserved

Documents
Document Sharing Hub
Copyright General Motors Company
Provided by IHS Markit under license with General Motors Company
Reproduction, distribution or publication of these standards is expressly prohib
Licensee=/, User=,
Not for Resale,
Full document details: GMW GMW14277 2016