GM WORLDWIDE ENGINEERING STANDARDS	Test Procedure	GMW14281

Measurement of Bending Stiffness of Body In White

1 Introduction

Note: Nothing in this standard supercedes applicable laws and regulations.

Note: In the event of conflict between the English and domestic language, the English language shall take precedence.

1.1 Purpose. Determination of global static bending stiffness of a Body In White (BIW).

1.2 Applicability. For all Body Frame Integral (BFI) passenger vehicles.

The test vehicle section will describe the components required for this procedure.

2 References

Note: Only the latest approved standards are applicable unless otherwise specified.

2.1 External Standards/Specifications.

None

2.2 GM Standards/Specifications.

None

3 Resources

3.1 Facilities.

3.1.1 Calibration. The test facilities and equipment shall be in good working order and shall have a valid calibration label.

3.1.2 Alternatives. Alternative test facilities and equipment may also be used. However, all measuring variables as specified in this standard shall be determined correctly with respect to their physical definition.

3.2 Equipment.

3.2.1 Test plate (clamping plate 5 m x 3 m).

3.2.2 Two (2) crossbeams with vertical adjustment.

3.2.3 Four (4) x 170 kg weight disks (One (1) weight disk of 10 kg).

3.2.4 One hundred (100) gauges (measurement range 10 mm, accuracy 0.01 mm) or linear potentiometer.

3.2.5 Eighty (80) magnetic mounts.

3.2.6 Twenty (20) dial gauge extensions 30 cm to 250 cm.

3.2.7 Axle supports.

3.2.8 Measuring plates with fastening material (plastilina).

3.2.9 Loading boards with fastening material (polyester filler).

3.3 Test Vehicle/Test Piece. BIW with fenders and all reinforcing components, e.g., steering crossmembers, screw-mounted front crossmembers (hard bolted, subframe (in vehicles with front wheel drive), rear axle in vehicles with torsion bar suspension, bumper beams, tower braces, instrument panel (IP) beam tunnel braces, radiator braces, rear seat braces, all fixed glass, and when testing convertible vehicles add doors if wedges are used. All items added to the BIW will be noted on the test log sheet.

3.4 Test Time. Varies by program.

3.5 Test Required Information. Not applicable.

© Copyright 2016 General Motors Company All Rights Reserved

Documents
Document Sharing Hub

Copyright General Motors Company
Provided by IHS Markit under license with General Motors Company
Reproduction, distribution or publication of these standards is expressly prohib
Licensee=/, User=,
Not for Resale,
Full document details: GMW GMW14281 2016

3.6 Personnel/Skills. Not applicable.

4 Procedure

4.1 Preparation.

4.1.1 Setting Up the Body.

4.1.1.1 Basis of measurement is the test plate.

4.1.1.2 The BIW shall be placed on the test plate (on wooden blocks).

4.1.1.3 Using production release urethane attach all fixed glass: windshield and rear window (rear window only in the case of notchbacks), including fixed side glass (do not include pop-out windows or other moveable glass).

4.1.1.4 Vertical adjustable fixation of front and rear crossbar on test plate.

4.1.1.5 Installation of subframe and suspension arms in vehicles with front wheel drive.

A rigid connection shall be produced between outer suspension arm and the center of the shock absorber bearing in the tower. The connection shall be perpendicular to the tower cap (see Figure 1).

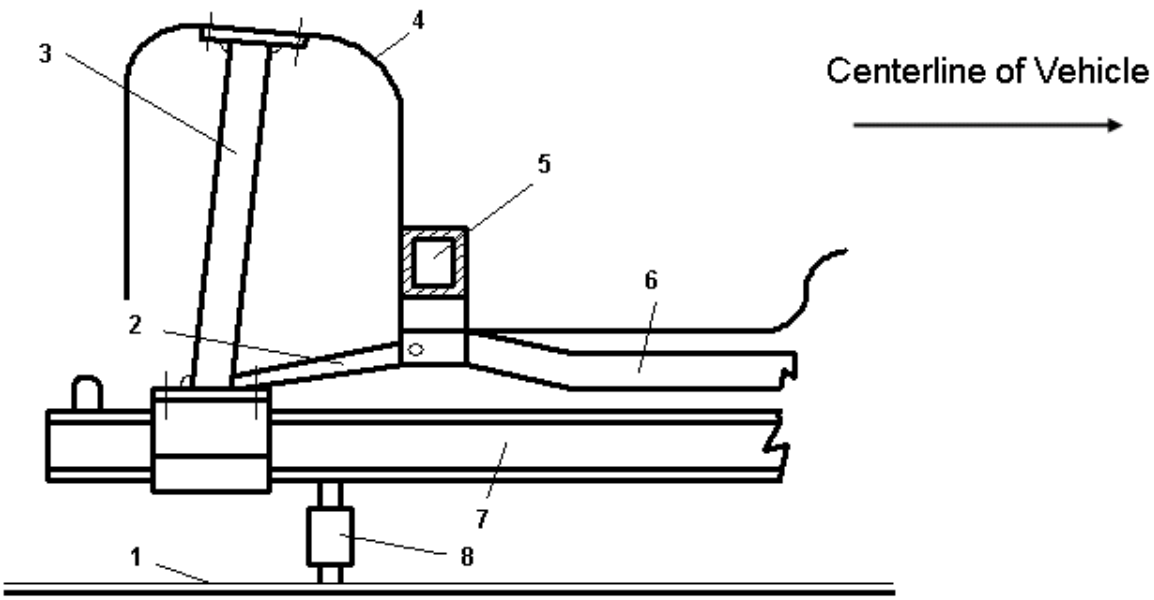

Note:
1 Bed plate
2 Suspension arm
3 Tube
4 Strut tower
5 Front longitudinal
6 Subframe
7 Front bar
8 Vertical adjustable support

Figure 1: Front Bar Fixation of BIW

4.1.1.6 Front End Fixation. Fixation of rigid tower connection on front cross bar in all three (3) translational degrees of freedom.

4.1.1.7 Rear End Fixation. The rear end fixation is depended on the rear axle construction (see Figure 2 and Figure 3). Rear spring seats (Left Hand (LH) and Right Hand (RH)) are fixed in vertical degree of freedom.

4.1.1.7.1 Rear axle with spring strut or separate spring damper unit.

A rigid connection between spring seat and rear crossbar shall be established (see Figure 2).

© Copyright 2016 General Motors Company All Rights Reserved

Documents
Document Sharing Hub
Copyright General Motors Company
Provided by IHS Markit under license with General Motors Company
Reproduction, distribution or publication of these standards is expressly prohib
Licensee=/, User=,
Not for Resale,
Full document details: GMW GMW14281 2016

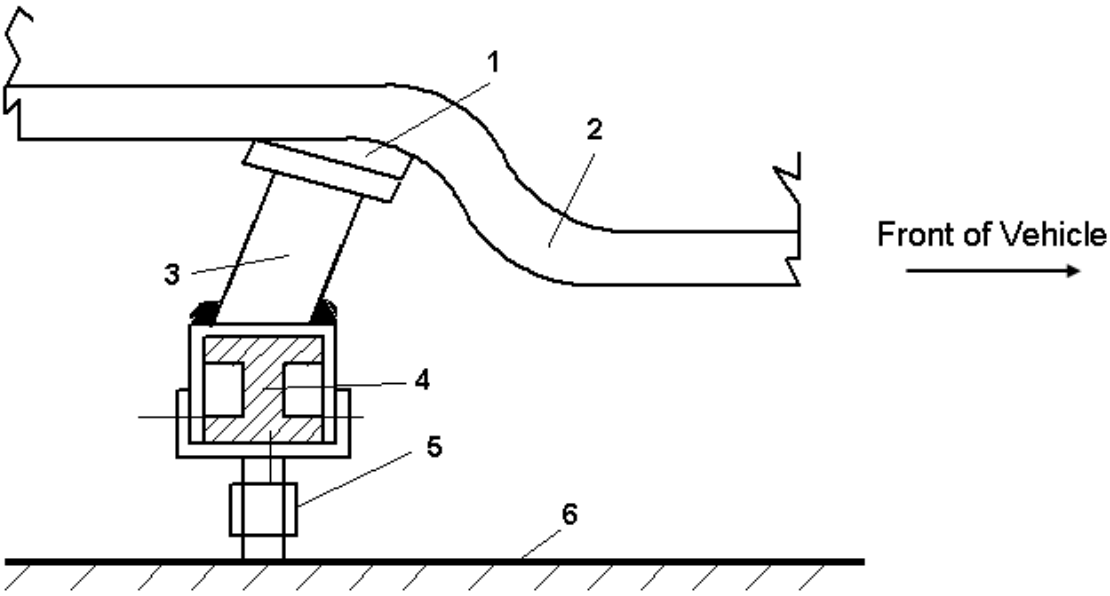

Note:
1 Spring seat
2 Rear longitudinal
3 Support
4 Rear cross bar
5 Height adjustable support
6 Bed plate

Figure 2: Fixation of Rear Support

4.1.1.7.2 Spring Seat On Rear Axle Carrier. Mounting of rear axle carrier and establish a rigid connection between spring seat and rear cross bar.

4.1.1.7.3 Torsion Bar Rear Axle. Installation of the complete rear axle in vehicles with torsion bar suspension. Support shall be effected at the wheel hub. Furthermore, the steering knuckles shall be secured to prevent twisting. This shall be achieved by producing a rigid connection between the shock absorber supports (see Figure 3).

© Copyright 2016 General Motors Company All Rights Reserved

Documents
Document Sharing Hub
Copyright General Motors Company
Provided by IHS Markit under license with General Motors Company
Reproduction, distribution or publication of these standards is expressly prohib
Licensee=/, User=,
Not for Resale,
Full document details: GMW GMW14281 2016