GM WORLDWIDE ENGINEERING STANDARDS	Test Procedure	GMW14361

Ageing Resistance/Brake Fluid Compatibility of Brake Hoses

1 Introduction

Note: Nothing in this standard supercedes applicable laws and regulations.

Note: In the event of conflict between the English and domestic language, the English language shall take precedence.

1.1 Purpose. This test procedure shall be used to simulate thermal ageing of brake hoses in conjunction with brake fluid. The parts shall then be subjected to further tests to check their good working order.

1.2 Applicability. Brake hoses with thermal ageing requirements. This standard is used to simulate thermal aging of brake hoses in conjunction with brake fluid.

1.3 Remarks. None.

2 References

Note: Only the latest approved standards are applicable unless otherwise specified.

2.1 External Standards/Specifications.

None

2.2 GM Standards/Specifications.

GMW14362 GMW16955

3 Resources

3.1 Facilities.

3.1.1 Calibration. The test facilities and equipment shall be in good working order and shall have a valid calibration label.

3.1.2 Alternatives. Alternative test facilities and equipment may also be used. However, all measuring variables as specified in this standard shall be determined correctly with respect to their physical definition.

3.2 Equipment.

3.2.1 Test Equipment. Container to hold brake fluid, contents approximately 350 cm^3 (see Figure 1, similar to GMW14362).

3.3 Test Vehicle/Test Piece.

3.3.1 Test Material. The number of brake hoses to be aged depends on the number of pre-aged brake hoses required for other test procedures.

3.4 Test Time. Reference the lab test procedures in Section 4 for timing details.

3.5 Test Required Information. See 5.3.

3.6 Personnel/Skills. Conform to company and/or laboratory requirements. Technician training records must be available upon request.

© Copyright 2017 General Motors Company All Rights Reserved

--`,,```,,,,````-`-`,,`,,`,`,,`---
Documents
Document Sharing Hub
Copyright General Motors Company
Provided by IHS Markit under license with General Motors Company
Reproduction, distribution or publication of these standards is expressly prohib
Licensee=/, User=,
Not for Resale,
Full document details: GMW GMW14361 2017

4 Procedure

4.1 Preparation. Not applicable.

4.2 Conditions.

4.2.1 Environmental Conditions. Not applicable**.**

4.2.2 Test Conditions. Deviations from the requirements of this standard shall have been agreed upon. Such requirements shall be specified on component drawings, test certificates, reports, etc.

4.3 Instructions.

4.3.1 Test Procedure.

4.3.1.1 The brake hoses shall be fastened, suspended vertically, with their female fitting to a container (see Figure 1). The other end (banjo fitting or female fitting) of the brake hoses shall be sealed with a suitable screw plug. Then the container shall be filled with brake fluid (use brake fluid per GMW16955, (Fluid Code A1) unless otherwise specified). The screw plug of each brake hose shall be opened until brake fluid emerges to ensure that the hose is filled with brake fluid without air bubbles. The ends shall then be securely screwed.

After all air is removed from the brake hoses, the container should still be filled approximately 50% with brake fluid, and be securely sealed.

Figure 1: Container to Hold Brake Fluid

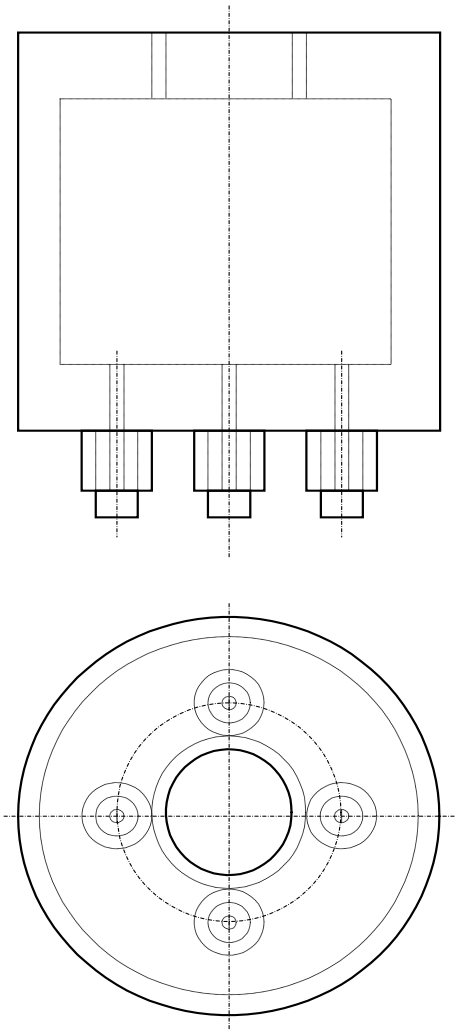

© Copyright 2017 General Motors Company All Rights Reserved

Documents
Document Sharing Hub

Copyright General Motors Company
Provided by IHS Markit under license with General Motors Company
Reproduction, distribution or publication of these standards is expressly prohib
Licensee=/, User=,
Not for Resale,
Full document details: GMW GMW14361 2017