GM	WORLDWIDE ENGINEERING STANDARDS	Test Procedure	GMW14364

Ingress, Egress, Jounce, and Squirm Seat Durability Test

1 Introduction

Note: Nothing in this standard supercedes applicable laws and regulations.

Note: In the event of conflict between the English and domestic language, the English language shall take precedence.

1.1 Purpose. Evaluate the ingress, egress, jounce, and squirm performance of a completely trimmed seat.

1.2 Applicability. This specification shall be applicable to all outboard seating positions directly accessible from the door opening.

2 References

Note: Only the latest approved standards are applicable unless otherwise specified.

2.1 External Standards/Specifications.

SAE J826

2.2 GM Standards/Specifications.

None

2.3 Additional References.

- Subsystem Technical Specification (SSTS).

3 Resources

3.1 Facilities. An approved GM certified test lab with an adequate bedplate or equivalent work surface necessary for mounting the test sample and associated test fixtures.

3.1.1 Calibration. The test facilities and equipment shall be in good working order and shall have a valid calibration label.

3.1.2 Alternatives. Alternative test facilities and equipment may also be used. However, all measuring variables as specified in this standard shall be determined correctly with respect to their physical definition.

3.2 Equipment.

3.2.1 Bedplate. An area with adequate work surface to securely mount a seat fixture and its associated seat.

3.2.2 Mounting Fixture. Rigid mounting blocks to simulate the floor attachment points to mounting the seat system on a bedplate or other equivalent work surface.

3.2.3 Robotic Form. A SAE J826 3D form or equivalent (i.e., Humanetics OccuForm Hard Shell 400-0000 as shown in Figure 1) covered with 12.5 mm of foam pad with a density of (48 to 80) kg/m^3 ((3 to 5) lb/ft^3) of foam and covered with number ten (10) Oceanic Duck fabric or specified fabric and pattern from the GM Validation/Responsible Engineer.

Note: The cover shall be changed every 50 000 cycles or if a hole or wear is present in the cover or foam pad.

3.2.4 Robotic Arm. A robot capable of motion planning at 10 Hz or higher. The software must be capable of compensating for 3-axis load for every point of motion (continuous load feedback), and load controlled sinusoidal motion of 2 Hz. The software must be capable of recording the 3-axis load data when in play mode. The robot software shall be capable of outputting the 3-axis load and position data, so that it may be put into a table, then plotted.

© Copyright 2017 General Motors Company All Rights Reserved

Documents
Document Sharing Hub

Copyright General Motors Company
Provided by IHS Markit under license with General Motors Company
Reproduction, distribution or publication of these standards is expressly prohib
Licensee=/, User=,
Not for Resale,
Full document details: GMW GMW14364 2017

Figure 1: Robotic Form (Humanetics OccuForm)

3.2.5 Pressure Mat. X-Sensor or equivalent, the minimum sensor response time shall be 7 Hz, and accurate within 5% of total required weight.

3.2.6 Mounting Blocks. Used to secure a vehicle body during an ingress, egress profile creation.

3.3 Test Vehicle/Test Piece.

3.3.1 Vehicle. A production representation vehicle which may be videotaped and pressure mapped. The production representative vehicle shall have or simulate the design ride height, door opening, seat adjustability and content.

3.3.2 Test Piece. A completely trimmed seat. The seat complete shall contain all resin parts (backboard, side shield, etc.), poured foam, and the latest level trim cover; unless otherwise specified by the GM Seat Validation Engineer.

3.4 Test Time.

Calendar time:	(10 to 35) days
Test hours:	(70 to 300) h
Coordination hours:	8 h

3.5 Test Required Information.

The head part number of the seat and its level shall be provided with the seat. The seat shall be provided with its H-Point data. Obtain from the seating arrangement drawing or from the Design Release Engineer (DRE) the seat back or head restraint post angle that results in the design torso angle when the seat is in its lower most, mid and uppermost positions. From the General Assembly (GA) drawing, obtain the heel point and a reference measurement from the vehicle to the ground that may be simulated in 4.1.1.2.1.

Note: If the H-Point values are outside of the boundaries as specified in the Subsystem Technical Specification (SSTS), do not proceed with the sample.

3.6 Personnel/Skills.

- GM Design Release Engineer.
- GM Seat Validation Engineer.
- Just In Time (JIT) Validation Engineer.
- Test Technician.

© Copyright 2017 General Motors Company All Rights Reserved

Documents
Document Sharing Hub

Copyright General Motors Company
Provided by IHS Markit under license with General Motors Company
Reproduction, distribution or publication of these standards is expressly prohib
Licensee=/, User=,
Not for Resale,
Full document details: GMW GMW14364 2017

4 Procedure

4.1 Preparation.

4.1.1 Panelist Ingress Egress.

Note: Panelist data shall only be collected in a representative vehicle.

4.1.1.1 Panelist Selection. Select at least two of each Panelist class according to Table 1. The selected Panelists shall be ±5.1 cm (±2 in) and ±4.5 kg (±10 lb) of the target class for the Adult Female 5th percentile (AF05), Adult Male 50th percentile (AM50), and Adult Male 95th percentile (AM95) listed in Table 1.

Table 1: Panelist Classification

	AF05	AM50	AM95
Height	152 cm (5 ft, 0 in)	175 cm (5 ft, 9 in)	188 cm (6 ft, 2 in)
Weight	50 kg (110 lb)	86 kg (190 lb)	123 kg (272 lb)

4.1.1.2 Ride Height.

4.1.1.2.1 Vehicle Ride Height. Using mounting blocks, stabilize the vehicle from rocking. If necessary, lift the vehicle to match the GA drawing from the ground to heel point, or the reference measurement collected in 3.5. If the vehicle ride height is already too high, consider using a platform or bedplate to effectively reduce the ride height of the vehicle. The vehicle may then need to be raised to match the exact ride height. See Figure 2.

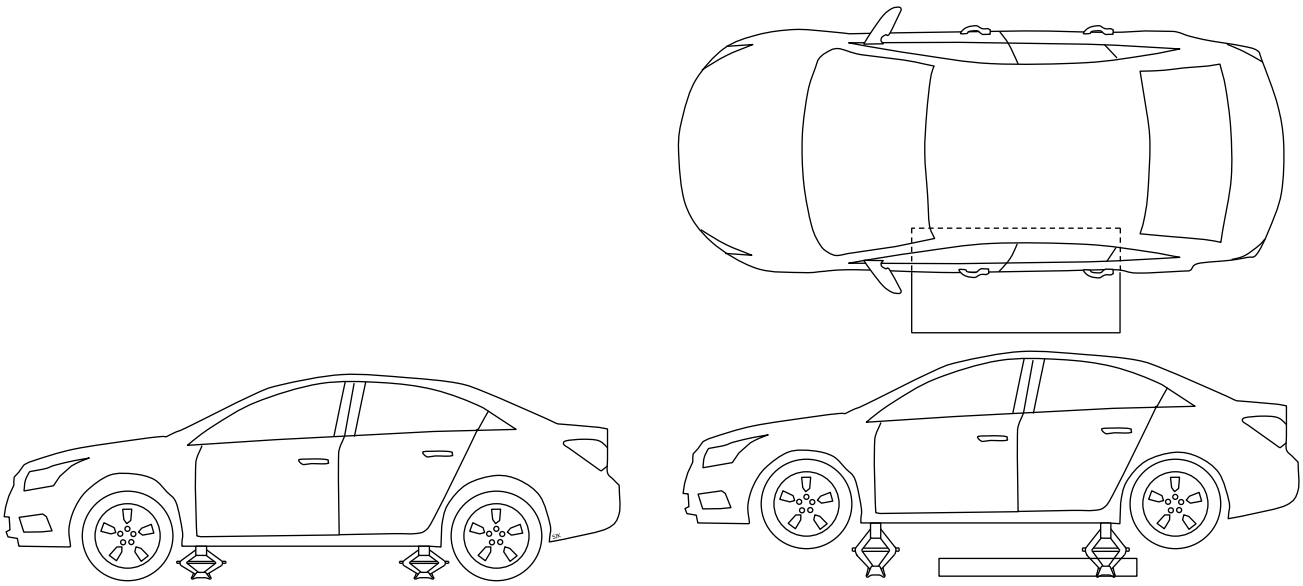

Figure 2: Vehicle Stabilization and Ride Height Simulation

4.1.1.3 Seat Positioning. The fore-aft adjustment shall be set according to the Panelist's preference, but all other adjustments shall be set to the applicable position listed in Table 2.

© Copyright 2017 General Motors Company All Rights Reserved

Documents
Document Sharing Hub
Copyright General Motors Company
Provided by IHS Markit under license with General Motors Company
Reproduction, distribution or publication of these standards is expressly prohib
Licensee=/, User=,
Not for Resale,
Full document details: GMW GMW14364 2017

Table 2: Panelist Ingress Seat Position

	Position 1	Position 2	Position 3
Height Adjustment	Upper Most	Mid	Lower Most
Tilt	Lower Most	Mid	Upper Most
CLA	Least Prominent	Mid	Most Prominent
Bolsters	Most Prominent	Mid	Least Prominent
Track	Panelist's Preference		
Recline Note 1	Seat back angle to provide design torso		
Lumbar	Least prominent		

Note 1: The height adjust and other adjustment features may affect the seat back angle, therefore, the seat back position shall be set last, to ensure the torso angle is set to the design target.
CLA Cushion Length Adjuster

4.1.1.4 Panelist Trials. Allow the Panelist to perform trials to become comfortable getting in and getting out. The Panelist shall perform a minimum of five (5) trials. Vehicle accessories such as grab handles, running boards, steering wheel and other features that may aid or inhibit the ability for the Panelist to ingress and egress shall be considered. The GM Validation Engineer and GM Design Release Engineer shall agree upon the conditions.

Note: Unless there are distinguishable differences between the driver and passenger side of the ingress egress path that significantly alter the profile, the driver side may be mirrored for the passenger side.

4.1.1.5 Panelist Pressure Mapping. Pressure mats shall be securely placed onto the seat to avoid unintentional Panelist contact, folding, or slipping between the pressure mat and seat surface. The pressure mats shall be positioned prioritizing any outboard bolster and side shield interaction. Prior to measurement, the Panelist shall ingress and adjust the fore-aft position of the seat, along with the steering wheel, if applicable. The Panelist shall then conduct the Panelist trials listed in 4.1.1.4, to become familiar with the vehicle. After the Panelist has become familiar and comfortable getting in and getting out, the pressure mapping data may be collected and the Panelist's path shall be video recorded to show overall hip movement and method of bolster load.

Note: This may require two cameras.

4.1.1.5.1 Panelist Pressure Mapping Data. Data shall be collected for a minimum of six Panelists (A through F in Table 3). Each pressure map file shall consist of a Panelist performing three (3) ingress egress cycles with the seat set at its respective Panelist position as shown in Table 3. An example of a pressure map file may be seen in Figure 3, where a single file contains three (3) ingress egress trials.

Table 3: Panelist Ingress Egress

Panelist	Panelist	Position 1	Position 2	Position 3
AF05	A	①②③		
	B	①②③		
AM50	C		①②③	
	D		①②③	
AM95	E			①②③
	F			①②③

© Copyright 2017 General Motors Company All Rights Reserved

Documents
Document Sharing Hub
Copyright General Motors Company
Provided by IHS Markit under license with General Motors Company
Reproduction, distribution or publication of these standards is expressly prohib
Licensee=/, User=,
Not for Resale,
Full document details: GMW GMW14364 2017

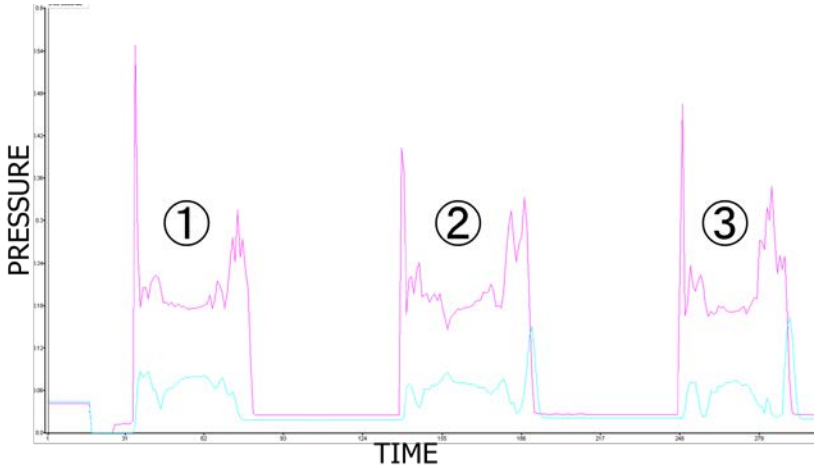

Figure 3: Panelist Pressure Mapping Dataset

4.1.1.6 Profile Selection.

4.1.1.6.1 Pressure Review. The data shall be presented as pressure vs. time plots. The average pressure plots shall have the cushion pressure, back pressure, and outboard bolster sensor groups. The plots shall have the same pressure scale and be titled with the Panelist's classification as shown in Figure 5. Identify the profile(s) that exhibit the highest peaks for further analysis. The outboard bolster sensor group shall be agreed upon by the GM DRE and GM Seat Validation Engineer. Figure 4 shows an example of the outboard bolster sensor group. In the event a GM Engineer is not available for agreement, the default outboard bolster sensor group shall be from the outboard insert trench and outward.

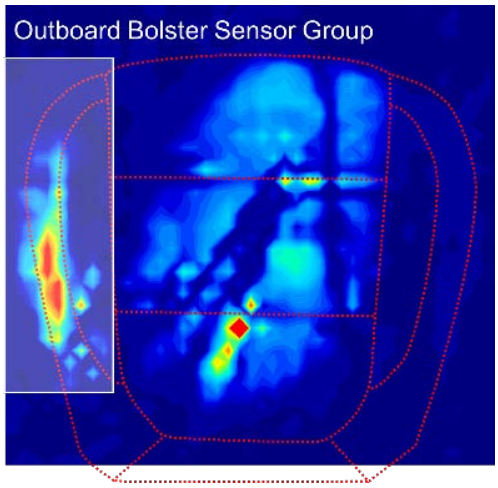

Figure 4: Outboard Bolster Sensor Group Example

© Copyright 2017 General Motors Company All Rights Reserved

Documents
Document Sharing Hub

Copyright General Motors Company
Provided by IHS Markit under license with General Motors Company
Reproduction, distribution or publication of these standards is expressly prohib
Licensee=/, User=,
Not for Resale,
Full document details: GMW GMW14364 2017

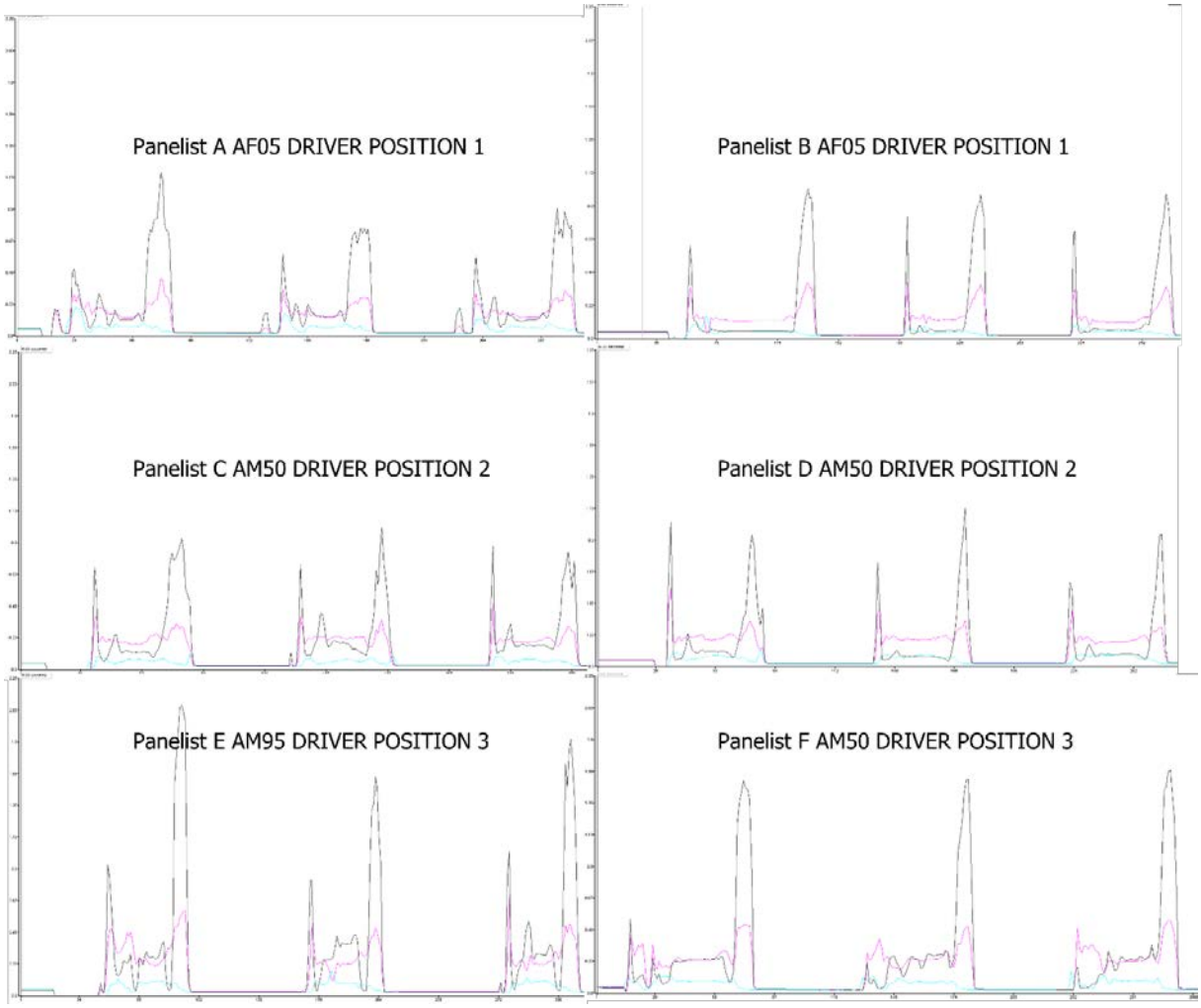

Figure 5: Pressure Review Presentation

4.1.1.6.2 Initial Review. From the pressure review, the selected profile(s) shall be analyzed with the pressure map and video as shown in Figure 6. Confirm no abnormalities such as hand, equipment errors, etc. are causing the pressure peaks.

Note: If comparing pressure maps, confirm the pressure legends are set to the same scale.

© Copyright 2017 General Motors Company All Rights Reserved

Documents
Document Sharing Hub

Copyright General Motors Company
Provided by IHS Markit under license with General Motors Company
Reproduction, distribution or publication of these standards is expressly prohib
Licensee=/, User=,
Not for Resale,
Full document details: GMW GMW14364 2017

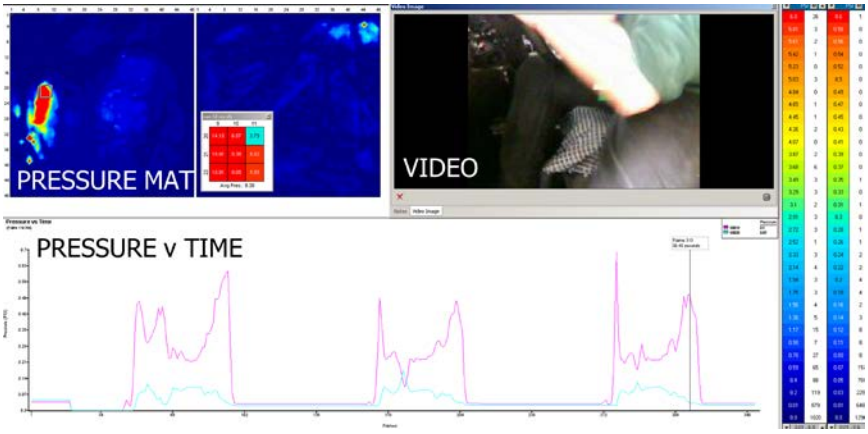

Figure 6: Initial Review with Pressure Mat, Pressure vs. Time, and Video

4.1.1.6.3 Profile Selection. A single Panelist's profile shall be selected based on the highest pressure values, most common contact location, largest area, and method of bolster load. The profile selection shall be agreed upon by the GM DRE or GM Validation Engineer. For the chosen profile, document the position the seat was in during the recording, as defined in Table 2 of 4.1.1.3.

4.1.2 Robotic Profile Creation.

4.1.2.1 Seat Position. The seat track shall be adjusted to its rearmost position and its other adjustments shall be based on the profile selected in 4.1.1.6.3.

4.1.2.2 Defining the Robotic Coordinate System.

Note: The inner side shield and head restraint shall be removed as necessary.

4.1.2.2.1 Coordinate confirmation points shall be programmed to confirm the robot position relative to the seat. The coordinate confirmation points shall be programmed outside of the robotic cycling loop.

4.1.2.2.2 All coordinate confirmation points shall be with the robotic form's baseplate at a pitch and roll measurement of 0 degrees as shown in Figure 7. The Z coordinate measurements shall be measured from the bottom of the baseplate. The X and Y coordinates shall be located using a plumbob hung through the hole in the baseplate tab, biased toward the body form as shown in Figure 7.

Note: An alternative pointer may be used to confirm the coordinate confirmation points. The use of an alternate pointer or alternate robotic form shall be documented, and photos shall be taken of the pointer at each confirmation point(s).

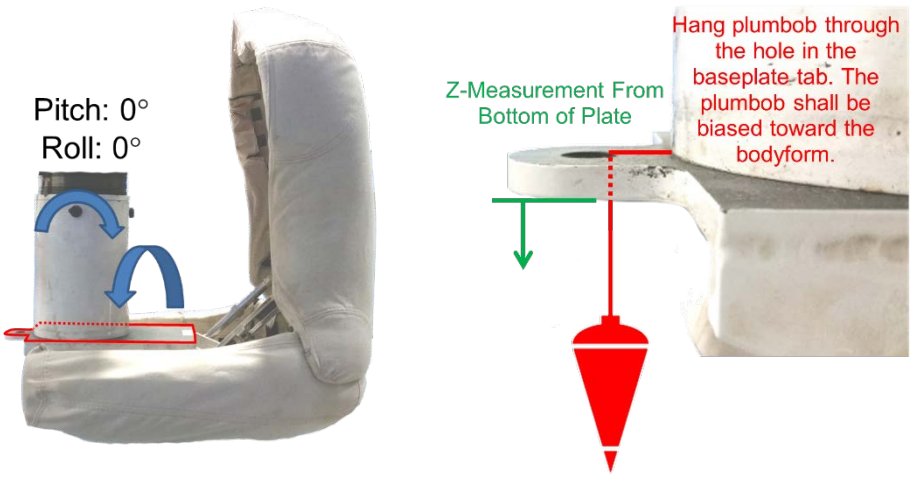

Figure 7: Robotic Form Coordinate Confirmation Measurement Datums

© Copyright 2017 General Motors Company All Rights Reserved

Documents
Document Sharing Hub
Copyright General Motors Company
Provided by IHS Markit under license with General Motors Company
Reproduction, distribution or publication of these standards is expressly prohib
Licensee=/, User=,
Not for Resale,
Full document details: GMW GMW14364 2017