GM WORLDWIDE ENGINEERING STANDARDS	Test Procedure	GMW14381

Exhaust-System Hanger Durability Test

1 Introduction

Note: Nothing in this standard supercedes applicable laws and regulations.

Note: In the event of conflict between the English and domestic language, the English language shall take precedence.

1.1 Purpose. Determination of the hanger dynamic strength in a bench test.

1.2 Applicability. For all vehicle and exhaust-system hanger attachments.

2 References

Note: Only the latest approved standards are applicable unless otherwise specified.

2.1 External Standards/Specifications.

None

2.2 GM Standards/Specifications.

None

2.3 Additional References.

Component Technical Specification (CTS)/Drawing Specification

3 Resources

3.1 Facilities. Oscillating or hydropulse unit with closed loop force control and cycle counter. The test device shall be suitable for dynamic forces of 100 N to 500 N with regard to a test frequency range of 10 Hz to 20 Hz (sine). The test facility shall have a valid International Organization for Standardization (ISO) certificate which is noted in a test report.

3.1.1 Calibration. The test facilities and equipment shall be in good working order and shall have a valid calibration label.

3.1.2 Alternatives. Alternative test facilities and equipment may also be used. However, all measuring variables as specified in this standard shall be determined correctly with respect to their physical definition.

3.2 Equipment.

3.2.1 Peak Value Recorder. To automatically record the force/travel amplitude, with automatic shutoff for the testing machine when the force/travel amplitude exceeds the adjusted limiting values.

3.2.2 Test Piece Mounting and Force Application. The test piece shall be mounted such that the hanger fastening/connection is not impaired (see Figure 1 as an example). The force application shall ensure the malleability of the hanger. A link of 150 mm with a Universal (U)-joint at both ends shall be installed between load cell and force application.

3.3 Test Vehicle/Test Piece. At least five (5) new production parts shall be tested. The hanger parts shall be produced as specified in the assembly drawing.

© Copyright 2016 General Motors Company All Rights Reserved

Documents
Document Sharing Hub

Copyright General Motors Company
Provided by IHS Markit under license with General Motors Company
Reproduction, distribution or publication of these standards is expressly prohib
Licensee=/, User=,
Not for Resale,
Full document details: GMW GMW14381 2016

3.4 Test Time.

Calendar time:	3 days
Test hours:	50 hours
Coordination hours:	2 hours

3.5 Test Required Information. Not applicable.

3.6 Personnel/Skills. Technician basic skills needed:

- Ability to perform exhaust component changes.
- Skilled in test bench usage.

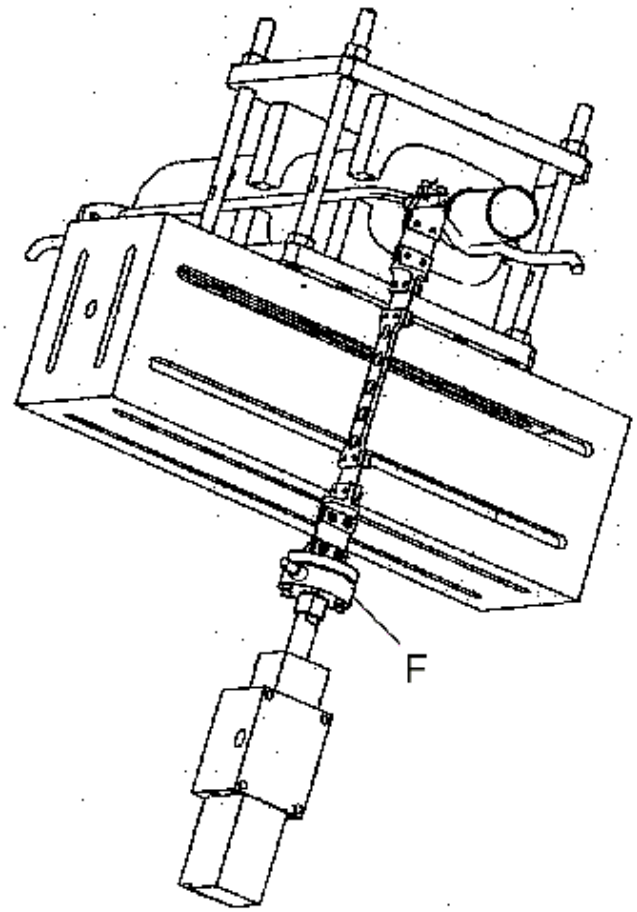

Figure 1: Test Piece Mounting and Force Application

4 Procedure

4.1 Preparation.

4.1.1 Test Set Up. The test set up shall be performed using the direction of force application determined from the strain collectives for the respective vehicle type and engine, which is indicated in the Component Technical Specification (CTS)/drawing specification.

4.2 Conditions.

4.2.1 Environmental Conditions. The test shall be performed at +23 °C ± 5 °C.

© Copyright 2016 General Motors Company All Rights Reserved

Documents
Document Sharing Hub
Copyright General Motors Company
Provided by IHS Markit under license with General Motors Company
Reproduction, distribution or publication of these standards is expressly prohib
Licensee=/, User=,
Not for Resale,
Full document details: GMW GMW14381 2016