GM WORLDWIDE ENGINEERING STANDARDS	Test Procedure	GMW14558

Curb Bumping – 45 Degree

1 Introduction

Note: Nothing in this standard supercedes applicable laws and regulations.

Note: In the event of conflict between the English and domestic language, the English language shall take precedence.

1.1 Purpose. This procedure describes a method to determine the durability of suspension components when subjected to a severe vehicle-to-curb impact.

1.2 Applicability. This specification applies to passenger cars and light duty trucks.

2 References

Note: Only the latest approved standards are applicable unless otherwise specified.

2.1 External Standards/Specifications.

ISO 9001

2.2 GM Standards/Specifications.

None

3 Resources

3.1 Facilities. This test can be performed on a Curb Impact Facility - Version A (Crash Center) or on a proving ground - Version B.

3.1.1 Calibration. The test facilities and equipment shall be in good working order and shall have a valid calibration label.

3.1.2 Alternatives. Alternative test facilities and equipment may also be used. However, all measuring variables as specified in this standard shall be determined correctly with respect to their physical definition.

3.2 Equipment.

3.2.1 Test Version A.

3.2.1.1 Adjustable curb test fixture and transducer element for measuring curb impact forces.

3.2.1.2 Vehicle transport device appropriate to test site.

3.2.1.3 Recording equipment to record force levels imparted to curb during impact tests.

3.2.1.4 Prick punch, hammer, scribe, and a scale with 0.5 mm divisions.

3.2.1.5 Photographic or video equipment as necessary.

3.2.2 Test Version B.

3.2.2.1 Fixed curb on a proving ground and the Drive Robot System to drive the car (radio controlled) or human driver.

3.2.2.2 Vehicle transport device appropriate to test site.

3.2.2.3 Recording equipment to record force levels imparted to curb during impact tests.

3.2.2.4 Prick punch, hammer, scribe, and a scale with 0.5 mm divisions.

3.2.2.5 Photographic or video equipment as necessary.

3.3 Test Vehicle/Test Piece.

© Copyright 2014 General Motors Company All Rights Reserved

Documents
Document Sharing Hub

Copyright General Motors Company
Provided by IHS Markit under license with General Motors Company
Reproduction, distribution or publication of these standards is expressly prohib
Licensee=/, User=,
Not for Resale,
Full document details: GMW GMW14558 2014

3.3.1 Test vehicle should be ballasted to Gross Vehicle Mass Rating (GVMR).

3.3.2 Test wheels and tires should be selected by the test engineer.

3.4 Test Time.

Calendar time:	1 day
Test hours:	8 hours
Coordination hours:	1 hour

3.5 Test Required Information. Not applicable.

3.6 Personnel/Skills. Operator must be qualified and documented as capable to run this test as required by ISO 9001.

4 Procedure

4.1 Preparation.

4.1.1 Assure that all test components are within manufacturer's specifications, as determined by the test engineer.

4.1.2 Inspect the vehicle for any damage or other unusual characteristics to the front suspension, frame, steering linkage, sheet metal, brake lines, and hoses or trim disc, if included. Correct as required.

4.1.3 Install test components and torque to minimum specifications.

4.1.4 Install check valve and line pressure gauge in front wheel brake hydraulic line so that front wheels may be locked independently of rear wheels.

4.1.5 Record manufacturer's specifications for toe setting, caster, camber and optional: wheel lateral run-out. Adjust and record toe setting, caster, and camber to manufacturer's mean specifications. Check and record front (Z) heights at vehicle mass as observed. Heights must be within manufacturer's specification. Correct as required. All test information is to be recorded on Data Sheets A1 thru A3 contained in Appendix A.

4.1.6 Optional: Measure and record wheel lateral run-out.

4.1.7 Install external ignition shut-off switch.

4.1.8 On areas of interest scribe adjacent parts for relative movement; prick punch marks along the parts to show bending. Record locations and dimensions as required on a data sheet. See Appendix A.

Note: The location of the scribe and the prick punch mark(s) are left to the discretion of the test engineer.

4.1.9 Load vehicle to GVMR.

4.2 Conditions.

4.2.1 Environmental Conditions.

- Version A: No restrictions.
- Version B: No rain, temperature > 5 °C.

4.2.2 Test Conditions. Deviations from the requirements of this standard shall have been agreed upon. Such requirements shall be specified on component drawings, test certificates, reports, etc.

4.3 Instructions.

4.3.1 Instructions Specific to Test Version A.

4.3.1.1 Deliver vehicle to the Curb Impact Facility.

4.3.1.2 Line up front wheel cart and vehicle with steering wheel in a straight ahead position, in area best for photographic coverage.

4.3.1.3 Adjust curb to normal position to right front wheel. Vehicle should be aligned so that impact line of force lines up approximately with pivot center of curb. Reposition vehicle as required. Tighten curb securely in place.

4.3.1.4 Back vehicle away from curb impact site.

4.3.1.5 Place cart directly in front of vehicle with steer dolly engaged on guide rail.

4.3.1.6 Place clamp on rail in front of cart.

4.3.1.7 Drive vehicle up onto cart in same position as when aligned originally.

© Copyright 2014 General Motors Company All Rights Reserved

Documents
Document Sharing Hub

Copyright General Motors Company
Provided by IHS Markit under license with General Motors Company
Reproduction, distribution or publication of these standards is expressly prohib
Licensee=/, User=,
Not for Resale,
Full document details: GMW GMW14558 2014

4.3.1.8 With wheels in a straight ahead position, engage brakes with sufficient line pressure to dynamically lock front brakes. Close check valve tightly.

4.3.1.9 Remove clamp from rail.

4.3.1.10 Place snubbing material (Hexcel, or equivalent) at curb to snub cart and steer dolly.

4.3.1.11 Set up load recording equipment (if required) which adapts to transducer section of curb, to record impact load on curb.

4.3.1.12 Constrain steering wheel to maintain the proper front wheel angle. The steering column lock must be disengaged; and, for power steering equipped vehicles, the engine is to be running to provide a steering power source.

4.3.1.13 Attach tow facility to cart and tow vehicle into curb at speeds starting at 8 km/h or as specified by test engineer.

4.3.1.14 When stopped, release front brake. Move vehicle away from the curb.

4.3.1.15 Inspect for visible damage as defined in 4.3.3. Determine if the vehicle is operable. Photograph as necessary.

4.3.1.16 Repeat, at increasing speed increments of 2 km/h (or as directed) until vehicle jumps over the curb or damage occurs per 4.3.3.

4.3.2 Instructions Specific to Test Version B.

4.3.2.1 The curb bumping test may be conducted against a 15 cm high obstacle rigidly bolted to a level surface. See Figure 1.

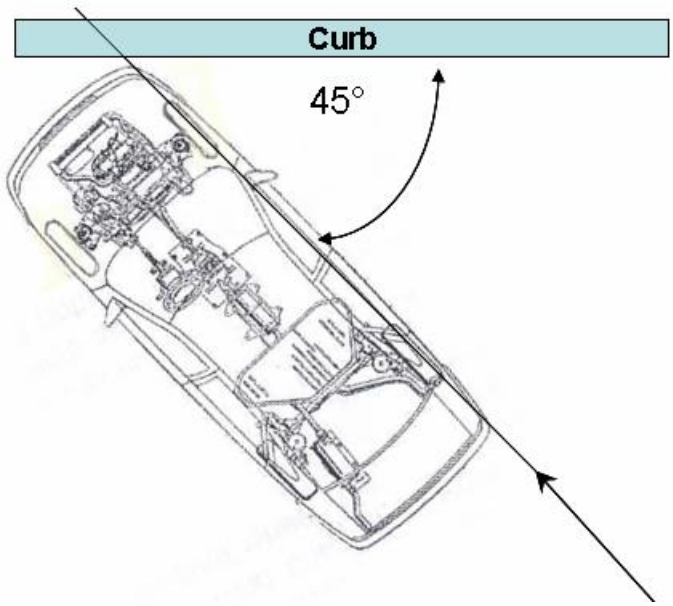

Figure 1: Vehicle Motion Relative to Curb

4.3.2.2 Spread and secure a 4 m × 6 m large, thick plastic foil in front of the obstacle (curb). Apply water and liquid soap to the foil to simulate an ice surface with an assumed coefficient of friction of zero ($\mu = 0$).

4.3.2.3 The test vehicle runs into the curb at a speed of v = 16 km/h (or as specified by test engineer) with the front wheels in a straight ahead position. The wheel must impact the curb at no more than a 45 degree angle. Refer to Figure 1 for direction of travel. Release steering wheel just before the impact.

4.3.2.4 Note: Since the parts to be tested are identical to a large extent on the left and right vehicle side, this test is applicable to both the left vehicle side and right vehicle side.

4.3.3 Instructions Applicable to Test Version A and Test Version B.

© Copyright 2014 General Motors Company All Rights Reserved

Documents
Document Sharing Hub

Copyright General Motors Company
Provided by IHS Markit under license with General Motors Company
Reproduction, distribution or publication of these standards is expressly prohib
Licensee=/, User=,
Not for Resale,
Full document details: GMW GMW14558 2014