General Specification for Electromechanical Plug-In, Printed Circuit Board, and Solid-State Relays

1 Introduction

Note: Nothing in this standard supercedes applicable laws and regulations.

Note: In the event of conflict between the English and domestic language, the English language shall take precedence.

1.1 Purpose. The purpose of the relay is to switch and carry load currents while a minor control current through the relay coil is applied.

1.1.1 The relay shall provide only two (2) operating modes:

- Switching Contact Open: No current flows
- Switching Contact Closed: Load current flows

An intermediate stage is not permitted.

1.2 Applicability. This standard applies to the following relays which are defined as follows:

- Relay with Normally Closed (NC) contacts: Single Pole Single Throw (SPST), NC
- Relay with Normally Open (NO) contacts: SPST, NO
- Relay with changeover contacts: Single Pole Double Throw (SPDT)
- Relay with multiple contacts: Double Pole Double Throw (DPDT)
- Solid State Relay (SSR): Constructed with electronic components which switch the load current on and off by means of Field Effect Transistors (FET) or electromechanical relays
- Multiple coil
- Latching

1.3 Remarks. This specification covers the testing of general purpose electromechanical plug-in, Printed Circuit Board (PCB), and SSRs. It presents a series of physical, environmental and durability tests, and product requirements which are used to determine the capability of a relay as specified by the part drawing.

Where a user's engineering practices or needs are not applicable to all features of this standard, it is intended that as many details as is practical be followed.

2 References

Note: Only the latest approved standards are applicable unless otherwise specified.

2.1 External Standards/Specifications.

ASTM B539	IPC ANSI/J-STD-002	SAE J1344	VDA 260

2.2 GM Standards/Specifications.

GMW3059	GMW3116	GMW3191	GMW15010
GMW3091	GMW3172	GMW3431	GMW16331
GMW3097			

2.3 Additional References.

- Component Technical Specification (CTS)
- Part Drawing (for device to be tested)

© Copyright 2015 General Motors Company All Rights Reserved

Documents Document Sharing Hub

Copyright General Motors Company
Provided by IHS Markit under license with General Motors Company
Reproduction, distribution or publication of these standards is expressly prohib
Licensee=/, User=,
Not for Resale,
Full document details: GMW GMW15267 2015

- Reliability Demonstration Plan

Note: If requirements of the part drawing conflict with requirements in this standard, the requirements of the part drawing shall take precedence.

3 Requirements

3.1 Electrical Performance Requirements. Relays should be tested at intervals specified in the Test Flow Charts shown in Appendix B (Figure B1) for plug-in electromechanical relays, Appendix C (Figure C1) for PCB electromechanical relays and Appendix D (Figure D1) for solid state relays, at the temperatures indicated unless otherwise specified.

All devices shall meet the performance requirements after exposure or usage cycles under the design ranges of temperature, current, and voltage stated and within the expected life of the product.

Performance limits are given at room temperature except where noted.

3.1.1 Equivalent Coil Resistance. Equivalent resistance is the coil or control circuit resistance as measured from the external relay terminals and includes a suppression device if present. Paragraphs 3.1.1.1 and 3.1.1.2 give methods for assessing the sink current of general purpose and solid state devices, respectively.

3.1.1.1 Direct Measurement. Resistance may be directly measured by placing the probes of a digital or analog meter directly to the relay terminals designated by the circuit schematic. The meter used should be capable of reading to 0.1 Ω or less and the resistance of the test leads shall be subtracted from the measurement value.

3.1.1.2 Voltage and Current Calculation. Resistance may be calculated by applying 14 V to the control circuit terminals specified by the circuit schematic. Record the maximum milliamp current draw as the voltage drop across a 1 Ω, 1% precision series resistor or digital ammeter, then calculate equivalent resistance using Ohm's Law.

3.1.1.3 Resistance Measurements. Resistance measurements shall be made before powering the coil or after sufficient cooling time to assure the device is at room temperature.

3.1.1.4 Requirements. Table 1 specifies the equivalent minimum coil resistance for various relay types at various operating temperatures. For relay types not shown in Table 1, a 55 Ω (minimum) equivalent resistance at room temperature is considered necessary to assure continuous operation (equivalent to 0.25 A maximum).

Table 1: Coil Resistance [Note]

Temperature	Mini Power Mini	Micro	High Current Micro	Ultra Micro	PCB (single)	PCB (dual, each relay)
-40 °C	53 Ω	56 Ω	56 Ω	67 Ω	132 Ω	172 Ω
+23 °C	70 Ω	75 Ω	75 Ω	90 Ω	175 Ω	228 Ω
+85 °C	88 Ω	93 Ω	93 Ω	110 Ω	218 Ω	262 Ω
+125 °C	95 Ω	104 Ω	104 Ω	125 Ω	245 Ω	318 Ω

Note: Minimum resistance.

3.1.2 Contact Resistance. A measure of initial part cleanliness, nobility of contact materials, shelf life, and suitability in low level circuits is made by evaluating contact resistance.

Contact resistance is measured in a manner which prevents a cleaning arc from occurring at a voltage level which will not frit through oxide films. Contact resistance, when specified, shall not exceed the limits stated on the part drawing. The part drawing shall also indicate if contact resistance limits are applicable to new parts only or throughout the life of the product.

Contact resistance checks are made using a circuit which limits open circuit voltage to 20 mV (maximum), so that the resistance of contact films can be measured. The current is limited to 100 mA (maximum), and switching arcs are avoided by closing the contacts before energizing the test circuit.

© Copyright 2015 General Motors Company All Rights Reserved

Documents
Document Sharing Hub
Copyright General Motors Company
Provided by IHS Markit under license with General Motors Company
Reproduction, distribution or publication of these standards is expressly prohib
Licensee=/, User=,
Not for Resale,
Full document details: GMW GMW15267 2015

3.1.2.1 Test Equipment.

3.1.2.1.1 The circuit in Figure 1 shall be used in the determination of contact resistance. Unless otherwise noted, all measurements shall be made at the terminals intended for external connection.

3.1.2.1.2 Voltage and resistor values may be varied or a commercial dry circuit resistance meter used, provided the current is limited to 100 mA and open circuit voltage is limited to 20 mV per ASTM B539.

3.1.2.1.3 Voltmeter leads shall be connected independently of the current leads in the measurement. The resistance of the voltmeter shall be at least 100 times the resistance of the measured contact set with an accuracy of ± 1%. The milli-ammeter shall have an accuracy of ± 1%.

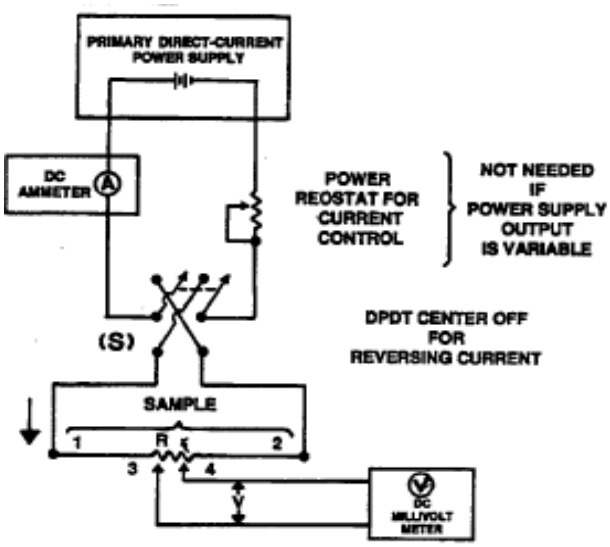

Note: DC = Direct Current

Figure 1: Contact Resistance Test

3.1.2.2 Procedure. Contact resistance measurement must be performed before cycling the relay or switch mechanically or under load. Care should be taken not to disturb the mating contacts through rough handling or shock.

3.1.2.2.1 If the device has normally closed (NC) contacts, measure the contact resistance before the relay/switch is operated.

3.1.2.2.2 For NC switches, close switch and adjust current to 100 mA. Record the maximum reading of the voltmeter and the minimum reading of the ammeter or the dry circuit resistance indicated by the micro-ohmmeter from 0.5 s to 2.5 s after closing switch. Open switch.

3.1.2.2.3 Reverse the polarity of the test power supply using switch(s) and repeat measurement sequence. Report the average contact resistance using the formula that follows. This method eliminates the need to zero meters between readings.

$$R = \left(E_{forward} + E_{reverse}\right) \div \left(I_{forward} + I_{reverse}\right)$$

3.1.2.2.4 Energize the relay coil at rated voltage. Close switch(s) and adjust load to 100 mA. Repeat test sequence for all normally open contacts.

3.1.2.2.5 If any reading is out of specification limits, repeat the test sequence until three readings are obtained for each contact set making sure to always open switch(s) before opening or closing the contact under evaluation. Report the average of the three readings on the test data sheet (reference Appendix F). Include the first reading in the average.

© Copyright 2015 General Motors Company All Rights Reserved

Documents
Document Sharing Hub
Copyright General Motors Company
Provided by IHS Markit under license with General Motors Company
Reproduction, distribution or publication of these standards is expressly prohib
Licensee=/, User=,
Not for Resale,
Full document details: GMW GMW15267 2015

3.1.3 Contact Voltage Drop. Voltage drop shall be performed as a bench type test at room temperature to improve the accuracy of the measurement and to standardize the measurement technique for devices which have multiple uses. Voltage drop is performed after equivalent resistance and contact resistance, but prior to pull-in and drop-out measurement since a break-in cycle is used before pull-in and drop-out testing.

3.1.3.1 A Kelvin approach shall be used to assure the connector interface resistance is not part of the recorded measurement. When a Kelvin approach is not practical due to device design, such as the case of relays with pigtails, voltage drop shall be determined by placing the voltmeter probes on the female connectors or at a point on the harness 76 mm from the connector interface. Note the manner in which the measurement is taken on the laboratory data sheet used if a non-Kelvin technique is used.

3.1.3.2 Use an analog or digital voltmeter capable of reading 0.001 V with a measurement accuracy of ± 5%. The impedance of the voltmeter shall be at least 100 times greater than the impedance of the measured circuit. Switch the rated current (resistive load) as defined by the product drawing for mechanical and electrical and environmental tests; and for operating durability samples prior to tests. Voltage drop during and after operating durability shall be performed using a resistive load equivalent to the steady state durability load. Refer to the circuit schematic for terminal identification, and then check all contact interfaces for all NO and NC circuits.

3.1.3.3 Allow 0.5 s to 1 s for the reading to stabilize, then record measurement. If reading is out of specification limits, repeat two more times switching rated current each time, and average the three readings to assure the value will be repeatable when returned to design source.

3.1.3.4 Voltage Drop Requirements. Voltage drop shall not exceed the given limits at 14 V terminal voltage from 0.5 A to rated load throughout the operating temperature range.

3.1.3.4.1 Limits.

- At delivery state: 3 mV/A (maximum) for NO Contacts and 4 mV/A (maximum) for NC Contacts
- After durability testing: 6 mV/A (maximum) NO Contacts and 8 mV/A (maximum) NC Contacts

3.1.4 Pull-In and Drop-Out Voltage. Voltages shall be measured in a consistent manner so that variations due to technique, coil heating, and residual magnetism are standardized (these variables cannot be eliminated due to the nature of the device).

A break-in routine consisting of making and breaking 25% of the maximum rated current five times at 0.5 s on, 0.5 s off, shall immediately precede the pull-in and drop-out measurement. Coil voltage is 14 V.

The same 25% of the maximum rated load shall be used during pull-in and drop-out measurement except where the steady-state, durability load is less. In the latter instance a resistor equalizing the steady-state durability load should be used.

3.1.4.1 Use a continuously variable or stepping power supply capable of increasing and decreasing voltage at a constant 3 V/s to 5 V/s. Stepping supplies shall use consecutive steps of 0.1 V (maximum).

3.1.4.2 Monitor circuit voltage at each NO contact identified in the circuit schematic. Pull-in voltage is the level at which the last NO contact indicates a voltage 90% of the open circuit voltage. The detection device must be capable of capturing the change in voltage at the contacts within 30 ms.

3.1.4.3 Continue to ramp voltage to a value of 14 V to seal the relay armature and establish a magnetic flux which correlates to the application. Allow the power supply to stabilize from 50 ms to 500 ms before decreasing the voltage at the standard ramp rate to determine drop-out voltage.

3.1.4.4 Drop-out voltage is the level at which the last NO contact exhibits a voltage 90% of the open circuit voltage.

3.1.4.5 Other Considerations.

3.1.4.5.1 For samples with no normally open contact, the procedure is the same, but the monitoring device is placed on the normally closed contacts.

3.1.4.5.2 Sense voltage measurements shall be recorded to 0.1 V and the total test time shall be short enough to prevent a change in equivalent resistance exceeding 1 Ω.

3.1.4.5.3 If reading is out of specification limits, repeat two times including the five (5) cycle break-in each time, and average the three readings to assure the value will be repeatable when returned to the design source.

3.1.4.5.4 When re-measurement is required, for example the averaging of readings to improve accuracy, the relays shall be allowed to stabilize at room temperature before re-measurement to minimize error.

© Copyright 2015 General Motors Company All Rights Reserved

Documents
Document Sharing Hub
Copyright General Motors Company
Provided by IHS Markit under license with General Motors Company
Reproduction, distribution or publication of these standards is expressly prohib
Licensee=/, User=,
Not for Resale,
Full document details: GMW GMW15267 2015

3.1.4.6 Pull-In and Drop-Out Voltage Requirements. Pull-in and drop-out voltage requirements at room temperature vary according to the maximum operating temperature specified by the part drawing. Reference Table 2. Suppliers wishing to set other specification limits for 23 °C operation must provide statistically significant correlations showing the relays meet the limits for the maximum temperature rating and these values shall be listed on the part drawing.

Table 2: Pull-In, Drop-Out Voltages

Test Ambient (°C)	Pull-In (Volts)		Drop-Out (Volts)	
	Minimum	Maximum	Minimum	Maximum
-40	3.0	5.8	1.0	4.2
23	3.8	7.0	1.3	5.2
85	4.7	8.7	1.6	6.5
125	5.3	10.0	1.8	7.3

3.1.5 Armature Tractive Voltage. Armature tractive voltage is defined as the coil voltage measured at the point where the armature first contacts the core pin.

3.1.5.1 Armature Tractive Voltage Requirements. The difference between pull-in voltage and armature tractive voltage shall not exceed 0.5 V at all test temperatures found in Table 2, with the exception of 23 °C. At 23 °C, the armature tractive voltage shall not exceed 7.2 V.

3.1.6 Actuation/Response Time.

3.1.6.1 Operate Time. Coil voltage shall be 10 V. Contact voltage shall be 14 V. Contact current shall be no greater than 25% rated current of the relay contacts. Appendix E, Figure E28 shows a basic circuit for measuring operate time.

For NO contacts, measure the time from application of voltage to the relay coil to the point when the normally open contacts first make contact.

For NC contacts, measure the time from application of voltage to the relay coil to the point when the normally closed contacts open.

3.1.6.1.1 Operate Time Requirements. The operate response time shall be < 10 ms within the temperature range T_{min} to 85 °C. For T = 125 °C, the operate response time shall be < 15 ms.

3.1.6.2 Release Time. Coil voltage shall be 16 V. Contact voltage shall be 14 V. Contact current shall be no greater than 25% rated current of the relay contacts. Appendix E, Figure E1 shows a basic circuit for measuring release time.

For NO contacts, measure the time from removal of voltage from the relay coil to the point when the normally open contacts open.

For NC contacts, measure the time from removal of voltage from the relay coil to the point when the normally closed contacts first make contact.

3.1.6.2.1 Release Time Requirements. The release response time shall be < 10 ms within the temperature range T_{min} to T_{max}.

3.1.7 Open Circuit Resistance. Open circuit resistance is a measure of the isolation between contacts in the open mode. It applies to all contact pairs (SPDT) in both the energized and de-energized condition.

3.1.7.1 Use a megohmmeter or Hi-pot type tester capable of supplying 500 VDC, +10 VDC/-0 VDC across the contact air gap. Read the open circuit resistance directly or calculate it by measuring microampere leakage, then apply Ohm's Law. Measurement accuracy for microampere leakage shall be within ± 10% of measured value.

3.1.7.2 Check the open circuit resistance for all contact air gaps in both the coil energized and de-energized mode. Apply the test voltage for 2 s to 10 s. The lowest reading after 2 s shall be used in determining conformance to specifications.

© Copyright 2015 General Motors Company All Rights Reserved

Documents
Document Sharing Hub
Copyright General Motors Company
Provided by IHS Markit under license with General Motors Company
Reproduction, distribution or publication of these standards is expressly prohib
Licensee=/, User=,
Not for Resale,
Full document details: GMW GMW15267 2015

3.1.7.3 Do not exceed 500 VDC potential when performing pre-endurance evaluations as a precaution to prevent dielectric breakdown, tracking, or other forms of sample degradation.

3.1.7.4 The voltage potential may be raised to increase the leakage current as a means of evaluating open circuit resistance at the conclusion of durability tests. Voltage breakdown which occur at over 500 V shall not constitute a test failure.

3.1.7.5 Open Circuit Resistance Requirement. Minimum open circuit resistance shall be 20 MΩ at 23 °C.

3.1.8 Insulation Resistance.

3.1.8.1 Use a megohmmeter or Hi-pot type tester capable of producing 500 VDC, +10 VDC/-0 VDC from all isolated coil terminals to the relay base, cover, and all isolated circuits as externally measurable from the relay terminals. Refer to the circuit schematic to determine where isolation applies. Ammeter measurement accuracy when using the voltmeter-ammeter method shall be within 10% of measured values. Apply the test voltage for 2 s to 10 s. The lowest resistance after 2 s shall be used to determine conformance to specifications.

3.1.8.2 Do not exceed 500 VDC potential when performing pre-endurance evaluation as a precaution to prevent dielectric breakdown, tracking, or other forms of sample degradation.

3.1.8.3 Insulation Resistance Requirement. With 500 VDC potential applied to an isolated coil terminal, no leakage exceeding 25 µA shall occur across any other isolated terminal or the relay cover (equivalent to 20 MΩ isolation resistance).

When applying the voltage, the insulation resistance shall be guaranteed between:

- The open contacts
- The contacts and the coil terminals
- The blade connectors and the metallic housing (if provided)
- The blade connectors and the metallic fixture or bracket

3.1.9 Jump Start Requirement. The relays shall be protected against over-voltage (coil voltage) without any damage to the relay when tested according to GMW3172 Jump Start Test.

3.1.10 Reverse Polarity. The relay shall be protected against reverse polarity supply voltage without damage to the relay when tested according to GMW3172 Reverse Polarity Test.

3.1.11 Over Voltage Test. The Over Voltage test addresses the following two conditions:

- Generator regulator failure so that the output voltage of the generator rises above normal value.
- The use of battery chargers with high voltage pulses.

Test according to GMW3172 Over Voltage Test.

3.1.12 Short Circuit Resistance (All Relays). For electromechanical relays or solid state relays without thermal protection.

When the load is short circuited, the contacts shall switch and carry the short circuit current without any damage until the primary connected fuse responds.

3.1.13 Electrical Overload. Continuous overloads are to be applied based on the current rating of the device and the typical application fuse values. In instances where more than one pair of contacts with mutually exclusive functions exist, each contact pair shall be subjected to this test sequence independently.

3.1.13.1 Devices shall be subjected to the overload conditions in Table 3 in the order shown for a given contact current rating.

© Copyright 2015 General Motors Company All Rights Reserved

Documents
Document Sharing Hub

Copyright General Motors Company
Provided by IHS Markit under license with General Motors Company
Reproduction, distribution or publication of these standards is expressly prohib
Licensee=/, User=,
Not for Resale,
Full document details: GMW GMW15267 2015

Table 3: Overload Conditions by Relay Type

Mini and High Current Micro Relays 35 A Rating	
Current	**Duty Cycle**
54 A	30 minutes On, 10 minutes Off, 30 minutes On
80 A	1 minute On, 10 minutes Off, 1 minute On
240 A	1 s On, 2 s Off, 1 s On
Micro and Ultra Micro (Space Saver) Relays 20 A Rating	
Current	**Duty Cycle**
40.5 A	30 minutes On, 10 minutes Off, 30 minutes On
60 A	1 minute On, 10 minutes Off, 1 minute On
180 A	1 s On, 2 s Off, 1 s On
Power Mini Relays, ≥ 40 A Rating	
Current	**Duty Cycle**
81 A	30 minutes On, 10 minutes Off, 30 minutes On
120 A	1 minute On, 10 minutes Off, 1 minute On
360 A	1 s On, 2 s Off, 1 s On
PCB/(Low Current PCB) Standard Micro SSR/(Low Current Micro SSR) 10 A to 15 A/(≤ 5 A) Ratings	
Current	**Duty Cycle**
33.8 A/(13.5 A)	30 minutes On, 10 minutes Off, 30 minutes On
50 A/(20 A)	1 minute On, 10 minutes Off, 1 minute On
150 A/(60 A)	1 s On, 2 s Off, 1 s On

© Copyright 2015 General Motors Company All Rights Reserved

Documents
Document Sharing Hub
Copyright General Motors Company
Provided by IHS Markit under license with General Motors Company
Reproduction, distribution or publication of these standards is expressly prohib
Licensee=/, User=,
Not for Resale,
Full document details: GMW GMW15267 2015

3.1.13.2 Allow 10 minute rest periods between each current level tested.

3.1.13.3 Current Overload Requirements. All devices must be capable of completing current overload tests to permit circuit protection devices, such as fuses or fusible links, time to react. The relay contacts shall not fuse or weld while switching and carrying each current for the duration listed.

3.1.14 Electromagnetic Compatibility (EMC). Test according to GMW3091 and GMW3097.

3.1.15 High Temperature Durability. Expose relays to 504 h of high temperature:

- 440 h at 125 °C
- 60 h at 136 °C
- 2 h at 147 °C
- 2 h at 125 °C

During exposure, continuously expose the relay NO contacts to the electrical cycles of Table 4 based on relay type.

Table 4: High Temperature Durability

High Current Micro/Mini Relays
20 A cycling for 1 minute, switching cycle: 10 s on, 10 s off
20 A continuous for 19 minutes
30 A continuous for 9 minutes
40 A continuous for 1 minute
Then decrease the current to 20 A and repeat the cycle
Ultra Micro/Micro Relays
13 A cycling for 1 minute, switching cycle: 10 s on, 10 s off
13 A continuous for 19 minutes
20 A continuous for 9 minutes
27 A continuous for 1 minutes
Then decrease the current to 13 A and repeat the cycle
Mini Power Relays
30 A cycling for 1 minute, switching cycle: 10 s on, 10 s off
30 A continuous for 19 minutes
40 A continuous for 9 minutes
50 A continuous for 1 minute
Then decrease the current to 30 A and repeat the cycle.
PCB Relays
10 A cycling for 1 minute, switching cycle: 10 s on, 10 s off
10 A continuous for 19 minutes
15 A continuous for 5 minutes
20 A continuous for 5 minutes
Then decrease the current to 10 A and repeat the cycle

3.1.15.1 Exposure for relays with a NC contact configuration must limit the maximum continuous current to 100% of the relay's NC contact rating.

3.1.15.2 High Temperature Durability Requirements. The relay contacts must operate freely and must not fuse or weld throughout the test. However, during the exposure at 147 °C, the relay may be inoperative, but must recover normal operation when the temperature returns to 125 °C. Following each temperature exposure, allow the relays to stabilize to the test temperature without electrical load for at least 20 minutes, then measure and record the following functional parameters: Coil Resistance, Pull-in Voltage, Drop-out Voltage, and Contact

© Copyright 2015 General Motors Company All Rights Reserved

Documents
Document Sharing Hub
Copyright General Motors Company
Provided by IHS Markit under license with General Motors Company
Reproduction, distribution or publication of these standards is expressly prohib
Licensee=/, User=,
Not for Resale,
Full document details: GMW GMW15267 2015

Voltage Drop. At the end of the test, measure the functional performance parameters at 23 °C. Relays must meet the specified requirement for contact voltage drop.

3.1.16 Durability Life Test (Cyclic Test). The durability life test shall be performed with the cyclic temperature profile that is according to GMW3172 Power Temperature Cycle Test.

Record contact voltage drop every cycle or other suitable interval agreed to by GM engineering.

- Test Voltage at Relay Coil: Half of cycles with 11 V ± 0.2 V, half of cycles with 14.5 V ± 0.2 V
- Test Voltage at Load Circuit: 14.5 V ± 0.2 V

Durability life test load cycle criteria reference is provided in Appendix A, Table A1.

3.1.16.1 Durability Life Test Requirements. The relay contacts must operate freely, and must not fuse or weld throughout the test.

At the end of the test measure the functional performance parameters at T_{min}, 23 °C and T_{max}.

The relay must meet the specified requirement for contact voltage drop.

3.1.17 Post Durability Test. The test shall be performed immediately after the cyclic durability life test with same parts at T_{max} and with the same test load.

- Test voltage at relay coil: 16 V ± 0.2 V
- Test voltage at load circuit: 14.5 V ± 0.2 V

3.1.17.1 When a SPST relay is tested, the relay coil must be in the appropriate state for the contacts to be in the closed position. Test time is 36 h.

3.1.17.2 When a change over relay (SPDT) is tested, both contacts, NO and NC, shall follow the test time below to cover all stress combinations:

- Coil energized and NO contact closed for 18 h
- Coil not energized and NC contact closed for 18 h

3.1.17.3 End of Life Test/Test to Failure. The test shall be continued immediately after the post durability performance check with the same parts at T_{max} and with the same test load.

- Test voltage at relay coil: 14.5 V ± 0.2 V
- Test voltage at load circuit: 14.5 V ± 0.2 V

Continue testing until a minimum of three samples fail with the same failure mode.

3.1.17.4 Post Durability Test Requirement. The relay contacts must operate freely, and must not fuse or weld throughout the test.

At the end of the test measure the functional performance parameters at T_{min}, 23 °C and T_{max}.

Relay must meet the specified requirement for contact voltage drop.

3.1.17.5 End of Life Test/Test to Failure. The test shall be continued immediately after the post durability performance check with the same parts at T_{max} and with the same test load.

- Test voltage at relay coil: 14.5 V ± 0.2 V
- Test voltage at load circuit: 14.5 V ± 0.2 V

Continue testing until a minimum of three samples fail with the same failure mode.

3.1.18 Coil Inductance. The typical relay coil inductance must be measured for each separate part number supplied to GM. The information must be provided as part of the validation data and must also appear on the drawings supplied to GM. The coil inductance information will be used to adequately design the drivers in the controller modules.

3.1.18.1 Measurement Procedure.

3.1.18.1.1 Required Equipment.

- Power supply with 2% voltage regulation
- 60 MHz digital storage oscilloscope

3.1.18.1.2 The coil voltage at which the DC coil inductance measurement is to be performed shall be 14 V.

© Copyright 2015 General Motors Company All Rights Reserved

Documents
Document Sharing Hub

Copyright General Motors Company
Provided by IHS Markit under license with General Motors Company
Reproduction, distribution or publication of these standards is expressly prohib
Licensee=/, User=,
Not for Resale,
Full document details: GMW GMW15267 2015

3.1.18.1.3 The inductance shall be measured with both the armature fully closed and blocked fully open with a non-ferromagnetic material.

3.1.18.1.4 The relay shall be mounted in its normal operating position on a non-magnetic plate with no immediately adjacent metal.

3.1.18.1.5 The relay coil shall be energized by a bounceless switch.

3.1.18.1.6 By measuring the time for the current to reach 63% of its final value, the DC Inductance is calculated as:

$$L = RT$$

Where:

L = Inductance measured in Henries

R = DC circuit resistance in ohms, recorded immediately prior to testing

T = Time in seconds for the current to reach 63% of its final value

Values of L (in Henries), R (in ohms), and T (in seconds) shall be recorded.

3.1.19 Load Soak (Operational Performance). Tests at extremes of temperature, current, and voltage are used to verify the continuous duty nature of the device and evaluate performance over the application temperature range. Sustained operation at both upper and lower temperature rating is necessary to ascertain the continuous current capability of the device.

3.1.19.1 Heat samples in circulated air to the maximum rated temperature identified by the test specification at a terminal voltage of 14 V while carrying the resistive rated load. Allow the samples to soak for a period of 24 h. Relay modules shall be energized based on function. In instances where more than one (1) pair of contacts with mutually exclusive functions exist, each contact pair shall be subjected to this test sequence independently.

3.1.19.2 Reduce the power supply voltage to the maximum drop-out allowed by the test specification and check that all relays remain energized. Further reduce the power supply voltage to the test specification minimum drop-out and assure that all relays release. Raise the voltage to the maximum pull-in voltage given by the test specification then check to assure all relays energize.

3.1.19.3 Allow samples to stabilize at room temperature.

3.1.19.4 Stabilize samples at -40 °C by soaking for 1 h without energizing the coil (or control) circuit. Energize relays at 16 V. Then proceed as in 3.1.19.2.

3.1.19.5 All relays must be capable of completing this exposure. Samples shall meet performance requirements of 3.1.1 through 3.1.5, 3.1.7 and 3.1.8.

3.1.19.6 Operational Performance shall be defined as the ability to carry, break, transfer, isolate, make and then carry one or more electrical circuits in sequence while subject to the rated current load and operating temperature range previously specified. Switching sensitivity as a function of terminal voltage is to meet the requirements of 3.1.4.6 unless otherwise specified.

3.1.20 Electrical Performance Requirements – Solid State Relays.

3.1.20.1 Parasitic Current. The parasitic/quiescent current shall be as specified in the component technical specification (CTS) or assembly drawing.

Test according to GMW3172.

3.1.20.2 Battery Voltage Dropout. Test according to GMW3172.

3.1.20.3 Ground Offset. Test according to GMW3172.

3.1.20.4 Power Offset. Test according to GMW3172.

3.1.20.5 Superimposed Alternating Voltage. Test according to GMW3172.

3.1.20.6 On Resistance. The On resistance shall be as specified in the CTS or assembly drawing.

Test according to Figure E22, Appendix E.

3.1.20.7 Input Turn-On Voltage. The Input Turn-on Voltage shall be as specified in the component specification or assembly drawing.

Test according to Figure E23, Appendix E.

© Copyright 2015 General Motors Company All Rights Reserved

Documents
Document Sharing Hub

Copyright General Motors Company
Provided by IHS Markit under license with General Motors Company
Reproduction, distribution or publication of these standards is expressly prohib
Licensee=/, User=,
Not for Resale,
Full document details: GMW GMW15267 2015

3.1.20.8 Input Turn-Off Voltage. The Input Turn-off Voltage shall be as specified in the component specification or assembly drawing.

Test according to Figure E24, Appendix E.

3.1.20.9 Output Leakage Current. Test according to Figure E25, Appendix E.

3.1.20.10 Turn-On Time. Turn-On Time shall be as specified in the component specification or the assembly drawing.

Test according to Figure E26, Appendix E.

3.1.20.11 Turn-Off Time. Turn-Off Time shall be as specified in the component specification or the assembly drawing.

Test according to Figure E26, Appendix E.

3.1.20.12 Pulse Width Modulation (PWM) Operation. Output Voltage amplitude, frequency and duty cycle shall be as specified in the component specification or the assembly drawing.

Test according to Figure E27, Appendix E.

3.2 Mechanical Performance Requirements.

3.2.1 Free Fall. Test according to GMW3172. This test shall verify that the component will not suffer functional degradation after a falling event if no visible damage is observed. Damage may occur if the component is dropped on the floor during handling, assembly, or service. Test fixture according to Appendix G, Figures G1 and G2.

3.2.2 Mechanical Shock. Test according to GMW3172. During mechanical shock, no unintentional opening or closing of the relay shall occur.

3.2.3 Vibration. Test according to GMW3172. During vibration, no unintentional or nuisance opening or closing of the relay contact greater than 1 ms shall occur.

3.2.4 Cover Integrity. The testing described is designed to ensure that the relay cover can withstand forces applied during insertion and removal into a Bussed Electrical Center (BEC) or stand-alone connector without deforming, cracking, or separation from the base. During test, the relay shall be restrained in a manner that does not aid or interfere with the attachment of the relay cover to the base.

3.2.4.1 Cover Strength. The wall thickness and mechanical strength of the relay housing shall be sufficient to withstand a side pressure at the housing wall of 80 N at a circular application area of 1 cm^2. The device housing shall not deform which might cause an involuntary function or damage of the relay.

Apply the force specified onto the relay cover in the direction to engage the connector body. Evenly distribute the force given by the test specification at the rate of 50 mm/minute ± 5 mm/minute. Note if cracking or permanent deflection (yield) occurs.

3.2.4.2 Relay Insertion. All devices shall be capable of withstanding a 500 N force applied to the relay cover in the direction to seat the sample into the female connector. This test will assure that manual or automatic assembly tools will not damage the part.

3.2.4.3 Cover to Base Retention. The base plate of the relays shall be fixed strongly in the housing. The application of a pull out force of 150 N ± 10 N in the longitudinal axis at the housing and at an angle of 120 degrees shall not cause separation of the base plate. This requirement shall be fulfilled at temperatures of -40 °C ± 2 °C and +85 °C.

3.2.5 Connector Requirements. The relay connector must meet all terminal and connector requirements specified in GMW3191.

3.2.6 Sound Level. The relay shall not develop any noise in the vehicle when the assembly (relay armature, bracket or other relay components) vibrates.

Sound level checks are to be made using a sound level meter with an oscilloscope output at a point 900 mm from the face of the relay to the face of the microphone. The microphone shall be a 12.7 mm diameter free field or pressure type with a sensitivity of 50 mV/Pa and a frequency range of 6.5 kHz to 8 kHz (minimum).

3.2.6.1 Mount the relay to a 400 mm × 400 mm × 3 mm thick steel plate by its application mounting structure perpendicular to the axis of the dosimeter microphone in an enclosure with a background noise level not to exceed 55 dB on an A-weighted scale.

© Copyright 2015 General Motors Company All Rights Reserved

Documents
Document Sharing Hub

Copyright General Motors Company
Provided by IHS Markit under license with General Motors Company
Reproduction, distribution or publication of these standards is expressly prohib
Licensee=/, User=,
Not for Resale,
Full document details: GMW GMW15267 2015

3.2.6.2 Record the sound level waveform due to actuation in decibels on the A-weighted scale. Make a sound level measurement for both on-to-off and off-to-on modes of operation. Allow relay coil to cool between tests.

3.2.6.3 Requirements. A limited number of relay applications require verification of sound level. Peak sound level shall not exceed product requirement drawing specifications.

3.2.7 Bracket Retention. Bracket retention strength is measured by applying force in six (6) directions in three (3) mutually perpendicular axes to separate the bracket from the relay per Figure 2.

When applying the test force, the fixture shall neither aid nor interfere with the bracket attachment structure. On relays incorporating a snap-in mounted bracket, a straight bracket shall be used for measurements.

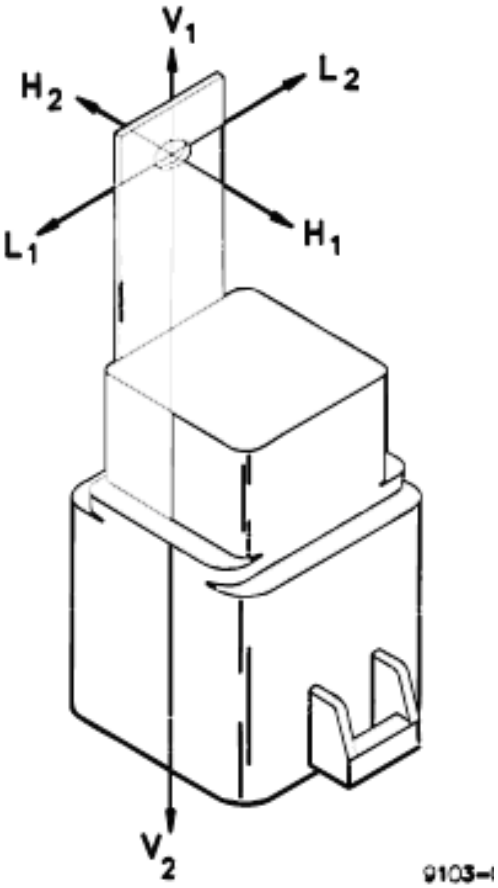

Figure 2: Axes for Bracket Retention Test

3.2.7.1 Application of force shall be at a rate of 50 mm/minute ± 5 mm/minute. Apply force until bracket separates from the relay, and measure the peak force value.

3.2.7.2 Requirements. Retention forces to separate bracket from relay, unless otherwise specified, shall exceed the minimum requirements of Table 5.

© Copyright 2015 General Motors Company All Rights Reserved

Documents
Document Sharing Hub
Copyright General Motors Company
Provided by IHS Markit under license with General Motors Company
Reproduction, distribution or publication of these standards is expressly prohib
Licensee=/, User=,
Not for Resale,
Full document details: GMW GMW15267 2015

Table 5: Retention Force Requirements

Force Application	Minimum Force Required
Shear (L1 and L2)	240 N
Bend (HI and H2)	240 N
Compression (V1)	110 N
Tension (V2)	110 N

3.2.7.2.1 Brackets must not separate from the base relay during assembly or diagnostic inspection. All devices must be capable of withstanding the forces specified without bracket separation. The part drawing should specify an installation and separation force range for removable bracket designs in which the base relay assembly is serviced separate from the bracket (e.g., 10 N to 55 N to latch tang or remove bracket).

3.2.7.2.2 If the relay is mounted with a mounting bracket, it shall not be deformed or damaged when the multiple connector is plugged in. The fixture of the bracket at the housing shall also not be damaged. The metal parts shall be capable of withstanding mechanical stress and influence of corrosion. This shall be verified dependent on the mounting position, using the relevant test according to salt spray testing and testing of mechanical strength.

3.3 Environmental Performance Requirements.

3.3.1 Dust. The relay shall withstand the test according to GMW3172.

3.3.2 Corrosion Testing. Surface protection and operation in a salt atmosphere shall be according to GMW3172. Use the salt spray procedure.

3.3.3 Humidity Resistance. The relay shall withstand the following:

3.3.3.1 Constant Humidity Resistance according to GMW3172 Humid Heat Constant.

3.3.3.2 Cyclic Humidity Resistance according to GMW3172 Humid Heat Cyclic.

3.3.4 Corrosion Testing with Mixed Flow Gas. For relays with low level currents, open frame construction, or limited cyclic durability, test according to GMW3431. Test only if required by the component specification or part drawing.

3.3.5 Thermal Shock. Test according to GMW3172 Thermal Shock Air-to-Air.

3.4 Physical Characteristics.

3.4.1 Dimensions. See applicable part drawing or CTS.

3.4.2 Mass Properties. See applicable part drawing or CTS.

3.4.3 Dependability. Unless otherwise stated, the target life is defined as follows.

3.4.3.1 Passenger vehicles: 240 000 km (133 000 mi) and 10 years.

3.4.3.2 Truck applications: 270 000 km (150 000 mi) and 10 years.

3.4.4 Reliability. Testing to demonstrate reliability must be completed by the supplier. For each reliability demonstration test, run the calculated sample size to the appropriate designated cyclic life tests found on the part drawing, or use the reference value identified in Appendix A, Table A1, at the appropriate temperature extremes as identified in 4.4.3 and at the appropriate temperature profile as identified in 3.1.15.

3.4.4.1 Failure is defined as inability of the contacts to make or break current or, in the case of the SSR, the inability of the signal input to control the state of the signal output.

3.4.4.2 Measure voltage drop on every cycle to verify no failure to make and break. Record the contact voltage drop every 1000 cycles, or other suitable interval agreed to by GM Engineering. Record the number of cycles to failure and the failure mode for each sample. The calculated reliability at a confidence level of 50% must meet a minimum of 99.5% for PCB relays and 99% for plug-in relays.

3.4.4.3 Actual test loads are required unless stipulated by the GM Engineer. Where simulated loads are used, the supplier must demonstrate that the simulated load represents the actual load before start of test.

© Copyright 2015 General Motors Company All Rights Reserved

Documents
Document Sharing Hub
Copyright General Motors Company
Provided by IHS Markit under license with General Motors Company
Reproduction, distribution or publication of these standards is expressly prohib
Licensee=/, User=,
Not for Resale,
Full document details: GMW GMW15267 2015

3.4.5 Serviceability.

3.4.5.1 The relay shall not require maintenance for the total life of the vehicle.

3.4.5.2 The relay must adhere to the serviceability requirements in GMW15010.

3.4.5.3 In the event of a malfunction, the relays shall be mounted so they can be easily removed and inserted. Where it is practical or possible, features shall be added to the relay case to aid in relay extraction/removal. The recommended feature would be two rectangular dimples or slots on opposite sides of the relay with the dimensions found in Figure 3. Reference Figure 4 for T-Bar dimensions.

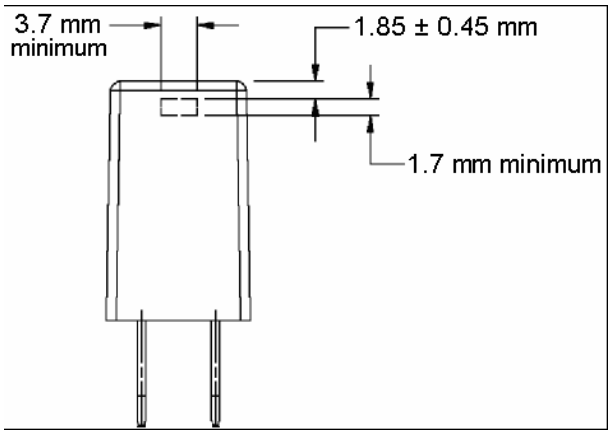

Figure 3: Serviceability Slot Dimensions

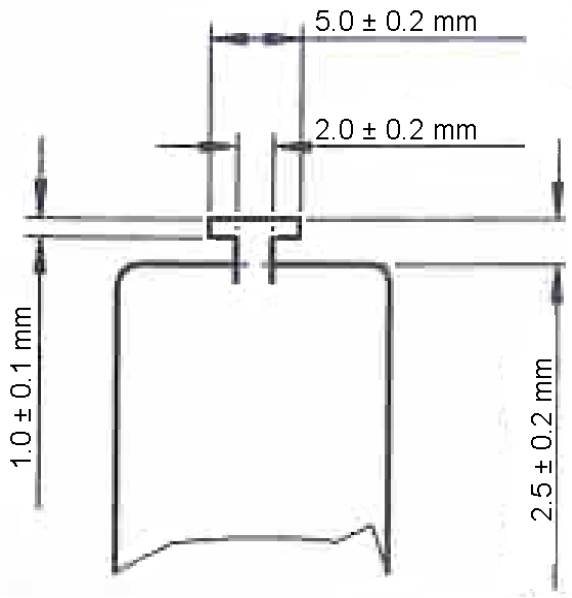

Figure 4: Serviceability T-Bar Dimensions

3.5 Materials, Processes and Parts Selection Guidelines. Materials used for relay construction shall comply with GMW3059. Connector and Terminal materials shall comply with GMW3191.

3.5.1 Contact Materials. By suitable selection of contact materials the buildup of oxide and sulfide layers shall be prevented which may cause long time failures. In addition the relay housing shall not contain any materials, which may impact the quality of the contact (silicones or oils). Plastic materials must be free of outgassing constituents.

© Copyright 2015 General Motors Company All Rights Reserved

Documents
Document Sharing Hub
Copyright General Motors Company
Provided by IHS Markit under license with General Motors Company
Reproduction, distribution or publication of these standards is expressly prohib
Licensee=/, User=,
Not for Resale,
Full document details: GMW GMW15267 2015

3.5.2 Contact Spring. The contact spring bearing the contacts shall not change its mechanical properties during temperature exposure and durability testing according to this specification.

3.5.3 Contact Presence. After completion of all testing, both contacts shall have a minimum contact presence, which ensures correct contact function.

3.5.4 Contact Bounce.

3.5.4.1 Temperature, voltages, and current shall be per 3.1.6.1 for NO contact bounce, and 3.1.6.2 for NC contact bounce. Using the basic circuit of Figure E1 in Appendix E, energize the relay coil with switch S. Observe closure of the NO contacts and measure the time from first contact closure until the contacts remain closed. With switch S, de-energize the relay coil. Observe closure of NC contacts and measure the time from first contact closure until the contacts remain closed.

3.5.4.2 Requirements.

- NO contacts 1 ms (maximum)
- NC contacts 5 ms (maximum)

3.5.5 Relay Contact Conditioning. To minimize problems with contact contamination, production relays shall be activated a minimum of ten times with a resistive load of minimum 1 A and contact voltage of minimum 12.0 V at room temperature prior to the End-of-Line test and shipping.

3.6 Soldering Requirements. Applicable to PCB relays only.

3.6.1 Solderability. PCB relays must meet the solderability requirements of IPC ANSI/J-STD-002, Test A. Pins must be pre-soldered.

3.6.2 Resistance to Soldering Heat.

3.6.2.1 The devices shall be able to survive one reflow temperature cycle per the reflow profile in Figure 5. See Note.

3.6.2.2 After exposure, there shall be no breakage or weakness in relay physical integrity that could affect required performance.

3.6.2.3 The relays shall meet the environmental test requirements of 3.3, Environmental Performance Requirements, and ultimately the performance parameter requirements of 3.2, Mechanical Performance Requirements and applicable subsections following exposure.

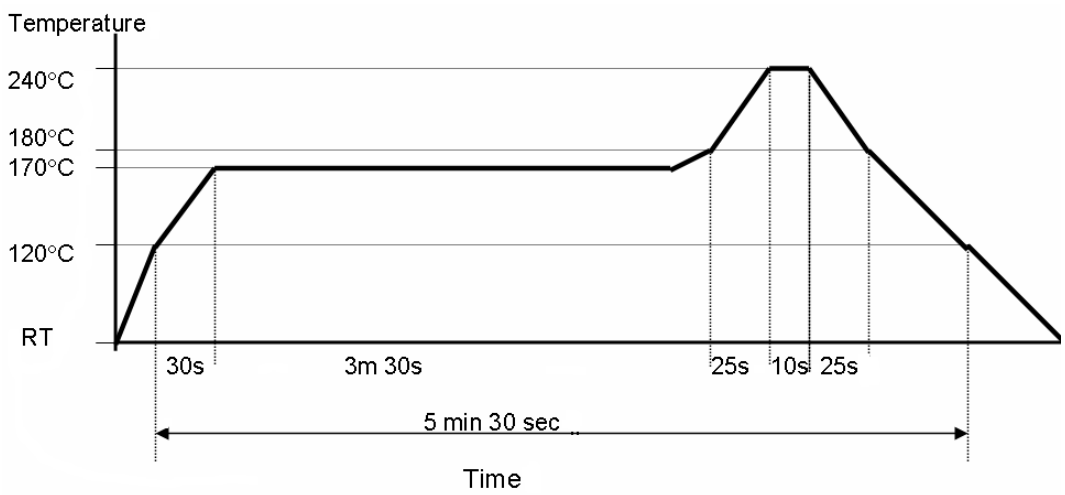

Note: Lead-based solder profile shown. For Lead-free solder reflow, maximum temperature shall not exceed 250 °C.

Figure 5: Reflow Soldering Profile

© Copyright 2015 General Motors Company All Rights Reserved

Documents
Document Sharing Hub
Copyright General Motors Company
Provided by IHS Markit under license with General Motors Company
Reproduction, distribution or publication of these standards is expressly prohib
Licensee=/, User=,
Not for Resale,
Full document details: GMW GMW15267 2015

3.7 Identification and Marking. Reference GMW16331 for part identification requirements.

3.7.1 All plastic parts shall have a polymer identification symbol per SAE J1344 or VDA 260 for recycling purposes. For small parts where space may preclude adequate marking, contact the GM responsible engineer for instructions.

3.7.2 The marking shall appear on the housing of the relay, legible and durable. It shall include the information:

- GM Trademark per GMW16331 Form B
- Suggested height for micro and smaller relays is 3.0 mm. Use 4.2 mm for larger relays.
- Manufacturing Date Code
- GM Part Number
- Relay schematic
- Nominal voltage

3.7.3 An eight-digit part number is to be clearly marked on each separate part. The pin designator (number or letter) shall be marked near each terminal. At a minimum, the first and last pin designator shall be marked. The minimum height of the digits shall be 1.5 mm.

3.7.4 The Julian date code shall appear on each part only after successful completion of End-of-Line tests, reference. The first digit shall indicate the year of manufacture. The last three digits shall be the day of the year (e.g., 6365 is 2006, December 31). The minimum height of the digits shall be 1.5 mm.

3.7.5 Where applicable, the manufacturer's assembly identification shall appear on each part, including the line numbers and or facility where duplication exists.

3.7.6 All samples used for testing purposes shall be externally or visibly marked in a permanent manner for identification and traceability purposes during the initial inspection process.

3.7.7 Resistance of the Marking. Test according to GMW3431 Brush Test. Use the following fluids:

- Engine Oil
- Gasoline
- Ethylene glycol
- Brake Fluid
- Washer solvent (commercial 50% water)
- Transmission Fluid
- Power Steering Fluid
- Engine Coolant, 50% (Dex-Cool)
- Diesel Fuel

3.7.7.1 At the conclusion of the soak period any remaining liquid shall be wiped off using a clean dry cloth.

3.7.7.2 Check and note the legibility of part number, date code, and manufacturer's identification (ID).

3.7.7.3 These tests are intended to assure vehicle operating liquids will not degrade the materials of construction or identification of electrical/electronic components. All devices shall be capable of 48 h direct exposure to the operating liquids and exposure conditions specified.

3.8 Workmanship.

3.8.1 The relays shall be free of burrs, flash, sharp edges, and any scratches that penetrate coating to the base material (bracket).

3.8.2 The relay housing, baseplate and blade connectors shall be free of burrs. Scratches or sharp edges, which may cause injuries, are not allowed.

3.8.3 The baseplate and housing shall match firmly.

3.8.4 The connectors shall not be deformed, thus increasing mechanical slip on force to female connectors of the wiring harness, or cause a change of the contact distance or the contact position.

3.9 Recyclability. All parts must adhere to the requirements in GMW3116.

© Copyright 2015 General Motors Company All Rights Reserved

Documents
Document Sharing Hub
Copyright General Motors Company
Provided by IHS Markit under license with General Motors Company
Reproduction, distribution or publication of these standards is expressly prohib
Licensee=/, User=,
Not for Resale,
Full document details: GMW GMW15267 2015

3.10 Documentation.

3.10.1 Samples. Samples of components or material released to this specification shall be tested for conformity with the requirements of this specification and approved by the responsible GM Department prior to the start of delivery of production level components or materials.

3.10.2 Part Changes. Any change to the component or material, e.g., design, function, properties, manufacturing process and/or location of manufacture requires a new release of the product. It is the sole responsibility of the supplier to provide the customer, unsolicited, with documentation of any change or modification to the product/process, and to apply for a new release.

3.10.3 Testing. If not otherwise agreed to the entire verification test shall be repeated and documented by the supplier prior to start of delivery of the modified or changed product. In some cases a shorter test can be agreed to between the responsible GM Department and the supplier.

3.10.4 Test Results. Test results shall be communicated to the GM responsible project engineer in accordance to the validation requirements section of this document, 4.6 Test Data and Test Report.

3.10.5 Deviations from Test Procedure. Deviations from the requirements of the test procedures shall have been agreed upon. Such requirements shall be specified on component drawings, test certificates, reports, etc.

4 Validation

4.1 General.

Note: If requirements of the part drawing conflict with requirements of this specification, the requirements of the part drawing shall have precedence.

The relay is part of an electrical circuit where a relatively low control current (through the coil or the control circuit) controls a high or low current through the load (load circuit).

This function shall be provided within a defined voltage and temperature range under defined ambient conditions.

4.2 Validation Cross Reference Index. See Table 6.

Table 6: Validation Cross Reference Index

Requirement	Paragraph	Additional Validation Documentation
Electrical Performance Requirements.	3.1	
Equivalent Coil Resistance.	3.1.1	
Contact Resistance	3.1.2	
Contact Voltage Drop	3.1.3	
Pull-In and Drop-Out Voltage	3.1.4	
Armature Tractive Voltage	3.1.5	
Operate Time	3.1.6.1	
Release Time	3.1.6.2	
Open Circuit Resistance	3.1.7	
Insulation Resistance	3.1.8	
Jump Start	3.1.9	GMW3172
Reverse Polarity	3.1.10	GMW3172
Over Voltage Test	3.1.11	GMW3172
Short Circuit Resistance	3.1.12	GMW3172
Electrical Overload	3.1.13	
Electromagnetic Compatibility	3.1.14	GMW3091 GMW3097
High Temperature Durability	3.1.15	

© Copyright 2015 General Motors Company All Rights Reserved

Documents
Document Sharing Hub

Copyright General Motors Company
Provided by IHS Markit under license with General Motors Company
Reproduction, distribution or publication of these standards is expressly prohib
Licensee=/, User=,
Not for Resale,
Full document details: GMW GMW15267 2015