GM	WORLDWIDE ENGINEERING STANDARDS	General Specification	GMW16286

Hybrid Coolant Pressure Caps

1 Introduction

Note: Nothing in this standard supercedes applicable laws and regulations.

Note: In the event of conflict between the English and domestic language, the English language shall take precedence.

1.1 Purpose. The engineering test schedule contained within this specification defines the minimum performance and durability criteria necessary for design and production validation. In addition, the minimum requirements for Post Validation Audit (PVA) testing of ongoing production are outlined. The schedule is intended as a supplement to normal material inspections, dimensional checking and in-process controls, and should in no way adversely influence adherence to other inspection operations.

1.2 Applicability. This specification applies to the quality, reliability, durability, and performance requirements for low temperature coolant Hybrid Low Pressure Caps typically used on hybrid vehicles. It acts as a supplement to the GM authorized drawings.

1.3 Remarks. Bill of Material (BOM) row 313 Coolant Plumbing and Hardware.

2 References

Note: Only the latest approved standards are applicable unless otherwise specified.

2.1 External Standards/Specifications.

SAE J1344

2.2 GM Standards/Specifications.

GMW3059	GMW8758	GMW14157 (ID)	GMW15862
GMW3116	GMW14138	GMW15758	
GMW3420	GMW14156 (ID)	GMW15760	

(ID) = This standard is limited to internal distribution within General Motors and shall not be distributed outside this company. Contact the GM Lead Engineer for further instructions.

2.3 Additional References.

- GM1738
- GM Part Number **13597035** Filler Neck-Surge Tank
- Pantone 116 Yellow

3 Requirements

3.1 Component/Part Definition.

3.1.1 Appearance. The cap shall not have any noticeable dents, scratches, twists or warpage. Cap cover color, grain and gloss shall be shown on the GM authorized drawing. The pad print warning shall conform to Pantone 116 Yellow.

3.1.2 Content.

3.1.2.1 Physical Content. The Hybrid Low Pressure Cap includes a valve housing (containing the main pressure and vacuum valves plus a path to an overflow port) and an external cap, which retains the valve housing within the filler neck, provides the human interface for installation and removal of the assembly, and provides a surface for imprinting identification information and other symbols, which may be required.

3.1.2.2 Functional Content. Not applicable.

© Copyright 2014 General Motors Company All Rights Reserved

Documents
Document Sharing Hub

Copyright General Motors Company
Provided by IHS Markit under license with General Motors Company
Reproduction, distribution or publication of these standards is expressly prohib
Licensee=/, User=,
Not for Resale,
Full document details: GMW GMW16286 2014

3.1.2.3 Material Tests. Gaskets and seals material must meet the requirements as defined in GMW14138 Section 3.1.2.3.

3.1.2.4 Material Test Machine. The test machine shall fulfill the following requirements as defined in GMW14138 Section 3.1.2.4.

3.1.3 Ambient Environment. The following is the ambient environment in which the Hybrid Low Pressure Cap must operate.

- Normal Operating Range: -40 °C to +125 °C.
- Maximum Under-Hood Temperature Excursions: -50 °C to +150 °C.
- Humidity Range: 0% to 100%.
- Altitude: -150 m to +4600 m.

Engine Compartment: Hybrid Low Hybrid Low Pressure Cap and all components may be exposed and shall be resistant to all typical, in car used fluids and substances in the following list:

- Coolant to GMW3420.
- De-ionized water.
- Fuels: Gasoline, Ethanol, Diesel, Bio-Diesel B5, B20.
- Oils/Fluids available on market: for engine, transmission, power steering, brakes.
- Engine degreasers and cleaners available on market.
- Salt Water Solution 5% by mass.

3.1.4 Interfaces. Mandatory matching to filler neck as GM released drawing 13597035.

3.1.5 Usage Definition. Not applicable.

3.1.6 Failure Mode and Effects Analysis (FMEA). Detailed design and process FMEAs shall be submitted to the GM Release Engineer and Validation Engineer upon request and shall be maintained as part of the vendor records of the Design and Product Validation. The FMEAs shall be updated each time a design change occurs.

3.1.7 Finish. The Hybrid Low Pressure Cap shall be free of burrs or any sharp edges, which may be detrimental to satisfactory assembly or safe handling.

3.1.8 Identification and Marking. The Hybrid Low Pressure Cap shall have the following markings to GMW15862 clearly displayed on the outside/underside of the part and not on a surface that is noticeable to the customer. Additionally followed information are required:

- Tool/Cavity Number.
- Material Content (required for all parts).
- Recycling Symbol per SAE J1344.

3.1.9 Internal/External Dryness/Cleanliness. All assemblies shall be thoroughly dry, prior to shipment. Parts shall not include any debris and not be exposed contaminations or durable lubes. Oil, grease or any contaminants may interfere with proper handling, cause plugging, or have a detrimental effect on the material and function properties.

3.2 Product Characteristics.

3.2.1 Performance Requirements.

- Validation of Hybrid Low Pressure Caps will be through vendor laboratory tests and vehicle durability and performance testing at GM Laboratory and Proving Ground facilities (see Table A1 in Appendix A for the Sequence Test Chart). Specific validation tests include, but are not limited to, the following tests defined in this specification.
- The Hybrid Low Pressure Cap shall work filled during the bench tests with coolant to the cold fill level comprised of 50% by volume water and by 50% volume anti-freezing agent to GMW3420.
- Temperature tolerances for all bench test values: ± 2 °C.
- Pressure tolerances for all bench test values: ± 2 kPa.
- Flow rate tolerance: ± 1.0 cm^3/minute (mL/minute).
- Volume tolerance: ± 5.0 cm^3.
- Torque tolerance: ± 0.25 N·m.

© Copyright 2014 General Motors Company All Rights Reserved

Documents
Document Sharing Hub
Copyright General Motors Company
Provided by IHS Markit under license with General Motors Company
Reproduction, distribution or publication of these standards is expressly prohib
Licensee=/, User=,
Not for Resale,
Full document details: GMW GMW16286 2014

3.2.1.1 Pre-test and Post-test. The following controls comprise the Acceptance Criteria for, and shall be performed on all samples before and after the following test: 3.2.1.3 Valve Sticking Test; 3.2.1.4 Vacuum Valve Leakage Test; 3.2.1.6 Overflow Test; 3.2.1.7 Thermal Cycle Test; 3.2.1.8 Pressure Cycle Test; 3.2.1.9 Thread and O-Ring Durability Test.

3.2.1.1.1 Main Valve Opening Pressure. Main valve opening pressure shall be called out on the GM authorized drawing.

3.2.1.1.2 Vacuum Valve Operation.

3.2.1.1.2.1 Opening Pressure Surge Tank Caps. The Vacuum Valve shall open at a maximum vacuum of 5.0 kPa and provide a minimum of 60 cm^3/minute (mL/minute) airflow.

3.2.1.1.2.2 Closing Flow-Rate Hybrid Caps. The Vacuum Valve shall close at a minimum flow-rate of 3.0 dm^3/minute (L/minute) airflow.

3.2.1.1.3 Hold Pressure. The Hold Pressure must not be less than 5.0 kPa below the recorded Main Valve Opening Pressure.

3.2.1.1.4 Flow Rate. Flow rate shall be a minimum of 200 cm^3/s (mL/s) under pressure relief conditions (65 kPa above Main Valve Opening Pressure).

3.2.1.1.5 Valve Assembly Leakage Hybrid Caps. When a vacuum of 50 kPa (use air as test medium) is applied at the over-flow port for a duration of 5 minutes, the valve assembly shall leak at a rate of less than 5.0 cm^3/minute (mL/minute). This includes leakage between the valve assembly and valve assembly cover.

3.2.1.1.6 Torque Test. After test completion, all test caps shall be torqued to 2 N·m on a filler neck conforming to GM Part Number 13597035.

3.2.1.2 Drop Test. Six (6) samples shall be subjected to the Drop Test Procedure.

3.2.1.2.1 Test Conditions.

- Soak cap at 0 °C for 24 h in a cold chamber.
- Remove cap from cold chamber and immediately drop from a height of 2 m onto a smooth, level concrete surface.
- Drop six samples in each orientation, as shown in Figure 1.

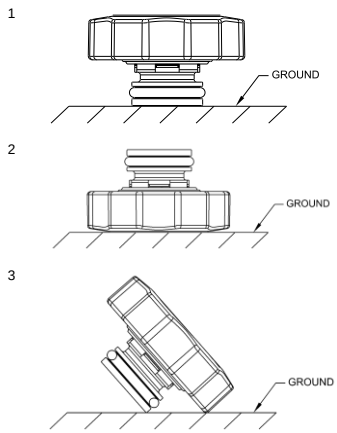

Figure 1: Pressure Cap Orientations for Drop Test

3.2.1.2.2 Acceptance Criteria. After the drop test, the cap shall not exhibit any external cracks fractured-off pieces, separation of the cover from the valve body or inability of the cap to freely rotate on the valve body.

3.2.1.3 Valve Sticking Test. Six (6) test samples shall complete the Valve Sticking Test Procedure.

3.2.1.3.1 Test Conditions. Repeat the test for 5 cycles.

- Immerse cap, cover side up, in coolant mixture at 100 °C and 50 kPa for 24 h.
- Turn the cap cover side down and immerse the cap in the specified coolant mixture for 2 minutes.

© Copyright 2014 General Motors Company All Rights Reserved

Documents
Document Sharing Hub
Copyright General Motors Company
Provided by IHS Markit under license with General Motors Company
Reproduction, distribution or publication of these standards is expressly prohib
Licensee=/, User=,
Not for Resale,
Full document details: GMW GMW16286 2014