GM WORLDWIDE ENGINEERING STANDARDS	Test Procedure	GMW16464

Cold Crank for Rechargeable Energy Storage Systems

1 Introduction

Note: Nothing in this standard supercedes applicable laws and regulations.

Note: In the event of conflict between the English and domestic language, the English language shall take precedence.

1.1 Purpose. This standard specifies the test procedure for evaluating the performance for Hybrid Electric Vehicle (HEV), Plug-in Hybrid Electric Vehicle (PHEV) and Extended Range Electric Vehicle (EREV) batteries that are used in a vehicle environment.

1.1.1 Cold Crank. This test shall be used to evaluate the ability to meet vehicle rechargeable energy storage systems (RESS) performance metrics. The cold cranking test is intended to measure the cold cranking power capability at low temperatures.

1.2 Applicability. This standard applies to all RESS for passenger or commercial vehicles and trucks. General Motors shall approve all changes to the format and/or content of this test standard.

Hybrid controllers, battery disconnect units (BDU), and other internal electrical/electronic components are required to meet GMW3172.

1.3 Remarks. This document provides the standard technical requirements for HEV, PHEV and EREV batteries. A program-specific technical specification that is used in conjunction with this document may include additional program-specific requirements that are not referenced in this document and may supercede any requirements included in this document. In the case of any conflicts between this document and the program-specific technical specification, the program-specific technical specification takes precedence.

2 References

Note: Only the latest approved standards are applicable unless otherwise specified.

2.1 External Standards/Specifications.

None

2.2 GM Standards/Specifications.

GMW3172

2.3 Additional References.

- Battery Lab document QF1009B
- CG2762 Default Test Parameters (the supplier shall work with the GM Design Responsible Engineer to comprehend this requirement).
- United States Advanced Battery Consortium (USABC): FreedomCAR Battery Test Manual for Power-Assist Hybrid Electric Vehicles. (http://www.uscar.org/guest/article_view.php?articles_id=86)
- USABC: FreedomCAR Battery Test Manual for Plug-In Hybrid Electric Vehicles. (http://www.uscar.org/guest/article_view.php?articles_id=86)

3 Resources

3.1 Facilities. The test facilities and equipment shall be in good working order and shall have valid calibration. Alternative test facilities and equipment may also be used. However, all measuring variables as specified in this standard shall be determined correctly with respect to their physical definition.

© Copyright 2017 General Motors Company All Rights Reserved

Documents Document Sharing Hub

Copyright General Motors Company
Provided by IHS Markit under license with General Motors Company
Reproduction, distribution or publication of these standards is expressly prohib
Licensee=/, User=,
Not for Resale,
Full document details: GMW GMW16464 2017

3.1.1 Calibration. The test facilities and equipment shall be in good working order and shall have a valid calibration label.

3.1.2 Alternatives. Alternative test facilities and equipment may also be used. However, all measuring variables as specified in this standard shall be determined correctly with respect to their physical definition.

3.2 Equipment. Appropriate equipment is required to complete the test procedure defined in Section 4 to acquire and store all necessary data. Data must be recorded using appropriate software for the battery cycler in use. Data sources will include data measured by the battery cycler and any external process indicators, i.e., flow meters. There may be additional data sources.

3.2.1 Equipment Parameters. Unless stated otherwise, the information in Table 1 defines the minimum test equipment parameters and tolerances to be used for all testing.

Table 1: Equipment Parameters and Tolerances

Parameter	Range	Tolerance
Direct Current (DC) Voltage: Pack Level – Generate and Measure	0 V to 599 V	± 1 V
	600 V to 749 V	± 1.25 V
	750 V to 900 V	± 1.5 V
DC Current: Pack Level – Generate and Measure	± 0 A to ± 99 A	± 1 A
	± 100 A to ± 199 A	± 1.25 A
	± 200 A to ± 500 A	± 2 A
DC Voltage: Cell Level – Generate and Measure	Minimum 0 V to 5 V; 0 V to 18 V	± 0.1% of Full Scale
DC Current: Cell Level – Generate and Measure	± 0 A to ± 500 A	± 1% of Full Scale
Power: Cell Level – Generate and Measure	0 W to 9000 W	Higher: ± 1 W; Lower: ± 0.1 W
Cell Balancing Criteria (if applicable)	Not applicable	< 3% Δ Cell State of Charge (SOC) or as defined by the manufacturer or by GM battery system engineers

3.3 Test Vehicle/Test Piece. All cell, module and pack level RESS.

3.4 Test Time.

Calendar time:	See CG2762 (the supplier shall work with the GM Design Responsible Engineer to comprehend this requirement)
Test time:	See CG2762 (the supplier shall work with the GM Design Responsible Engineer to comprehend this requirement)
Coordination time:	See CG2762 (the supplier shall work with the GM Design Responsible Engineer to comprehend this requirement)

3.5 Test Required Information. All limits imposed by the battery manufacturer shall be observed over the course of testing. Power, current, voltage and temperature restrictions provided in written documentation by the manufacturer take precedence over any instructions given in this document.

3.6 Personnel/Skills. All personnel performing tests must have up-to-date training records in a high voltage training program.

3.7 Personal Protection Equipment (PPE). PPE, such as high voltage gloves, face shields, fire extinguishers, etc., shall be in good working order and available in the immediate area used in the execution of the testing.

© Copyright 2017 General Motors Company All Rights Reserved

Documents
Document Sharing Hub

Copyright General Motors Company
Provided by IHS Markit under license with General Motors Company
Reproduction, distribution or publication of these standards is expressly prohib
Licensee=/, User=,
Not for Resale,
Full document details: GMW GMW16464 2017

4 Procedure

4.1 Preparation.

4.1.1 Additional customer requests or requirements must be provided in writing prior to start of test.

4.1.2 All devices under test (DUT) should be subjected to an initial inspection as defined by the requestor. See Battery Lab document QF1009B.

4.2 Conditions.

4.2.1 Environmental Conditions. Unless stated otherwise, the information in Table 2 defines the minimum test environment parameters and tolerances to be used for all testing.

Table 2: Environmental Parameters and Tolerances

Parameter	Range	Tolerance
Temperature Sensor – Measure	-40 °C to 85 °C	± 3 °C
Chamber Temperature – Generate and Measure	-40 °C to 85 °C	± 3 °C
Chamber Humidity – Generate and Measure	0% to 95% Relative Humidity (RH)	± 5% RH
Lab Environment Temperature – Measure	25 °C	± 10 °C
Lab Environment Humidity – Measure	10% to 85% RH	± 5% RH
Coolant Conditioner	-30 °C to 90 °C	± 1.5 °C

4.2.1.1 Unless otherwise specified by the test requestor, all testing should be conducted using environmental chambers and the humidity level should be set according to the requirements specified in Table 2. The ambient environment for the DUT should be maintained in accordance with manufacturer specifications.

4.2.1.2 Unless otherwise specified by the manufacturer, for cell level testing, if the temperature increase of the DUT is > 20 °C, with respect to the temperature of the cell at rest, the test must immediately enter a safety rest mode until the difference in temperature is < 5 °C, and then continue. If the rest mode exceeds 1 h, halt test. For the DUT temperature, if either thermocouple reads a temperature increase > 20 °C, immediately enter safety rest mode.

4.2.1.3 For cell level testing, a thermocouple must be placed in the center of the largest exposed area of the cell (Figure 1). At least one thermocouple must be placed in the area near the terminals. If the cell is constrained in a compression fixture, the thermocouple should not be compressed within the fixture. In this case, a thermocouple must be placed near the positive terminal and if the terminals are side by side, the thermocouple must be placed in an area near either terminal. Additionally, do not place a thermocouple between the terminals if they are side by side. Another thermocouple must be placed nearby the cell to monitor environmental temperature.

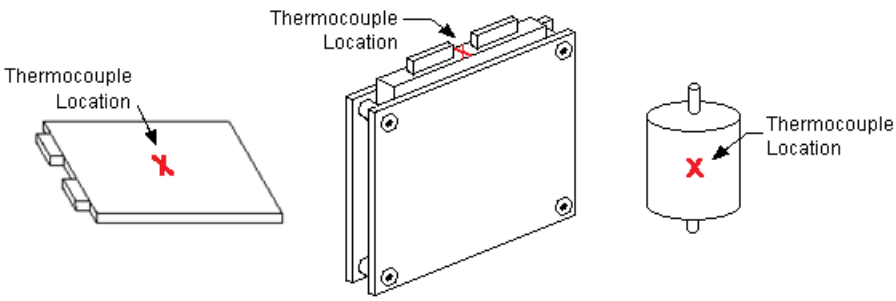

Figure 1: Examples of Thermocouple Locations on a Cell

© Copyright 2017 General Motors Company All Rights Reserved

Documents Document Sharing Hub
Copyright General Motors Company
Provided by IHS Markit under license with General Motors Company
Reproduction, distribution or publication of these standards is expressly prohib
Licensee=/, User=,
Not for Resale,
Full document details: GMW GMW16464 2017

4.2.1.4 All DUTs are required to have environmental conditioning according to 4.2.1.4.1 and 4.2.1.4.2 before the test is allowed to continue, unless otherwise specified by the manufacturer or requestor.

4.2.1.4.1 Cell/Module Level DUTs.

- **Temperature:** Specifically, the DUT surface temperature at the start of the test. If the previous test temperature is not equal to the desired test temperature, set the chamber temperature such that the cell surface temperature reaches the test temperature and then soak for at least 6 h and until DUT surface temperature is at the desired test temperature within the tolerances shown in Table 2. If previous test temperature is equal to the desired test temperature and the cell surface temperature is equal to the desired test temperature, continue immediately.
- **Humidity:** Uncontrolled, monitored (pack level only).

4.2.1.4.2 Pack Level DUTs.

- **Temperature:** Soak until average cell temperature equals the desired test temperature, where delta cell temperature (i.e., cell $\text{temperature}_{\text{maximum}}$ – cell $\text{temperature}_{\text{minimum}}$) is ≤ 5 °C.
- **Humidity:** Dew point should be kept lower than the chiller temperature for liquid cooled packs. Humidity should be uncontrolled and monitored for air cooled packs.
- **Cell balancing:** Cell balancing may be required at certain specified times throughout testing. The cell balancing algorithm will be defined by the manufacturer or requestor.

4.2.2 Test Conditions. Deviations from the requirements of this standard shall have been agreed upon. Such requirements shall be specified on component drawings, test certificates, reports, etc.

4.2.2.1 Samples of components or material released to this standard shall be tested for conformity with the requirements of this standard and approved by the responsible GM department prior to the start of delivery of production level components or materials.

4.2.2.2 Any change to the component or material, e.g., design, function, properties, manufacturing process and/or location of manufacture requires a new release of the product. It is the sole responsibility of the supplier to provide the customer, unsolicited, with documentation of any change or modification to the product/process, and to apply for a new release.

4.2.2.3 If not otherwise agreed to, the entire verification test shall be repeated and documented by the supplier prior to start of delivery of the modified or changed product. In some cases, a deviation based on a limited subset of tests can be agreed to between the responsible GM department and the supplier.

4.3 Instructions.

4.3.1 Cold Crank. This test will be conducted with a cell, module or pack level RESS connected to equipment being used to perform the cold crank test and data acquisition. A detailed flowchart and profile of the instructions can be seen in Appendix A. Default testing conditions and other information can be found in CG2762 (the supplier shall work with the GM Design Responsible Engineer to comprehend this requirement) and the FreedomCAR manuals.

5 Data

5.1 Calculations. The fundamental result of the cold crank test is the power capability at the end of the cold crank pulses. The actual power achieved does not necessarily represent the maximum power capability; it merely shows whether the device was able to meet the specified cold crank power goal. (Some batteries may be capable of higher power than this.) The maximum power capability may be calculated in a manner analogous to the normal pulse-power capability results, as follows. Calculate pulse resistance values using the following ΔV/ΔI calculation, where *t0* refers to the time just before the pulse and *t1* refers to the time at the end of the pulse. An example of resistance calculation points can be seen in Figure 2.

$$\boldsymbol{Resistance} = \frac{\Delta \boldsymbol{V}}{\Delta \boldsymbol{I}} = \frac{\boldsymbol{V_{t0}} - \boldsymbol{V_{t1}}}{\boldsymbol{I_{t0}} - \boldsymbol{I_{t1}}}$$

© Copyright 2017 General Motors Company All Rights Reserved

Documents
Document Sharing Hub

Copyright General Motors Company
Provided by IHS Markit under license with General Motors Company
Reproduction, distribution or publication of these standards is expressly prohib
Licensee=/, User=,
Not for Resale,
Full document details: GMW GMW16464 2017