Reverse Grade for Rechargeable Energy Storage Systems

1 Scope

Note: Nothing in this standard supercedes applicable laws and regulations.

Note: In the event of conflict between the English and domestic language, the English language shall take precedence.

1.1 Purpose. This standard specifies the test procedure for evaluating the performance for Hybrid Electric Vehicle (HEV) batteries that are used in a vehicle environment.

1.1.1 Reverse Grade. This test shall be used to evaluate the ability to meet vehicle rechargeable energy storage systems (RESS) performance metrics. The reverse grade test is intended to measure the battery power capability for reversing up a hill.

1.2 Foreword. This document provides the standard technical requirements for HEV batteries. A program-specific technical specification that is used in conjunction with this document may include additional program-specific requirements that are not referenced in this document and may supercede any requirements included in this document. In the case of any conflicts between this document and the program-specific technical specification, the program-specific technical specification takes precedence.

1.3 Applicability. This standard applies to all RESS for passenger or commercial vehicles and trucks. General Motors shall approve all changes to the format and/or content of this test standard.

Hybrid controllers, Battery disconnect units (BDU), and other internal electrical/electronic components are required to meet GMW3172.

2 References

Note: Only the latest approved standards are applicable unless otherwise specified.

2.1 External Standards/Specifications.

None

2.2 GM Standards/Specifications.

GMW3172

2.3 Additional References.

CG2762 Default Test Parameters

3 Resources

3.1 Facilities. The test facilities and equipment shall be in good working order and shall have valid calibration. Alternative test facilities and equipment may also be used. However, all measuring variables as specified in this standard shall be determined correctly with respect to their physical definition.

3.2 Equipment. Appropriate equipment is required to complete the test procedure defined in Section 4 to acquire and store all necessary data. Data must be recorded using appropriate software for the battery cycler in use. Data sources will include data measured by the battery cycler and any external process indicators, i.e., flow meters. There may be additional data sources.

3.2.1 Equipment Parameters. Unless stated otherwise, the information in Table 1 defines the minimum test equipment parameters and tolerances to be used for all testing.

© Copyright 2012 General Motors Company All Rights Reserved

Documents
Document Sharing Hub

Copyright General Motors Company
Provided by IHS Markit under license with General Motors Company
Reproduction, distribution or publication of these standards is expressly prohib
Licensee=/, User=,
Not for Resale,
Full document details: GMW GMW16465 2012

Table 1: Equipment Parameters and Tolerances

Parameter	Range	Tolerance
Direct Current (DC) Voltage: Pack Level – Generate and Measure	0 V to 599 V	± 1 V
	600 V to 749 V	± 1.25 V
	750 V to 900 V	± 1.5 V
DC Voltage: Cell Level – Generate and Measure	0 V to 20 V	± 0.1% of Full Scale
DC Current: Pack Level – Generate and Measure	± 0 A to ± 99 A	± 1 A
	± 100 A to ± 199 A	± 1.25 A
	± 200 A to ± 500 A	± 2 A
DC Current: Cell Level – Generate and Measure	± 0 A to ± 500 A	± 1% of Full Scale
Cell Balancing Criteria (if applicable)	Not Applicable	< 3% Δ Cell State of Charge (SOC) or as defined by the manufacturer or by GM battery system engineers

3.3 Test Vehicle/Test Piece. All cell, module and pack level RESS.

3.4 Test Time. See CG2762.

3.5 Test Required Information. All limits imposed by the battery manufacturer shall be observed over the course of testing. Power, current, voltage and temperature restrictions provided in written documentation by the manufacturer take precedence over any instructions given in this document.

3.6 Personnel/Skills. All personnel performing tests must have up to date training records in a high voltage training program.

3.7 Personal Protection Equipment (PPE). PPE, such as high voltage gloves, face shields, fire extinguishers, etc., shall be in good working order and available in the immediate area used in the execution of the testing.

4 Procedure

4.1 Preparation.

4.1.1 Additional customer requests or requirements must be provided in writing prior to start of test.

4.1.2 All devices under test (DUT) should be subjected to an initial inspection as defined by the requestor.

4.2 Conditions.

4.2.1 Environmental Conditions. Unless stated otherwise, the information in Table 2 defines the minimum test environment parameters and tolerances to be used for all testing.

© Copyright 2012 General Motors Company All Rights Reserved

Documents
Document Sharing Hub

Copyright General Motors Company
Provided by IHS Markit under license with General Motors Company
Reproduction, distribution or publication of these standards is expressly prohib
Licensee=/, User=,
Not for Resale,
Full document details: GMW GMW16465 2012

Table 2: Environmental Parameters and Tolerances

Parameter	Range	Tolerance
Temperature Sensor – Measure	-40 °C to 85 °C	± 3 °C
Chamber Temperature – Generate and Measure	-40 °C to 85 °C	± 3 °C
Chamber Humidity – Generate and Measure	0 to 95% Relative Humidity (RH)	± 5% RH
Lab Environment Temperature – Measure	25 °C	± 10 °C
Lab Environment Humidity – Measure	10 to 85% RH	± 5% RH
Coolant Conditioner	-30 °C to 90 °C	± 1.5 °C

4.2.1.1 Unless otherwise specified by the test requestor, all testing should be conducted using environmental chambers and the humidity level should be set according to the requirements specified in Table 2. The ambient environment for the DUT should be maintained in accordance with manufacturer specifications.

4.2.1.2 Unless otherwise specified by the manufacturer, for cell level testing, if the temperature of the DUT is greater than 20 °C, with respect to the temperature of the environment, the test must immediately enter a safety rest mode until the difference in temperature is less than 5 °C, and then continue. If the rest mode exceeds one hour, halt test.

4.2.1.3 For cell level testing, a thermocouple must be placed in the center of the largest exposed area of the cell (Figure 1). If the cell is constrained in a compression fixture, the thermocouple should not be compressed within the fixture. In this case, a thermocouple must be placed near the positive terminal, and if the terminals are side by side, the thermocouple must be placed between the terminals. Another thermocouple must be placed nearby the cell to monitor environmental temperature.

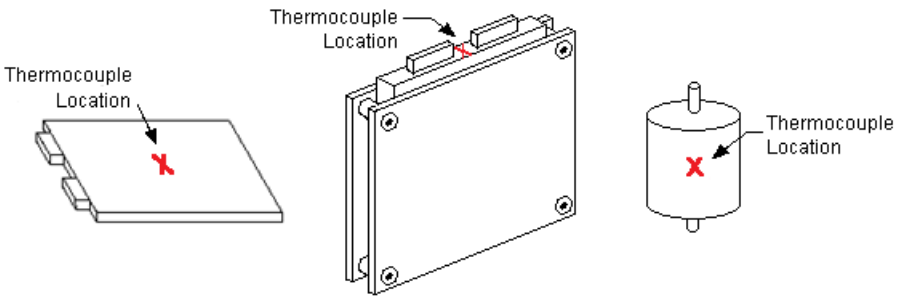

Figure 1: Examples of Thermocouple Locations on a Cell

4.2.1.4 All DUTs are required to have environmental conditioning according to 4.2.1.4.1 and 4.2.1.4.2 before the test is allowed to continue, unless otherwise specified by the manufacturer or requestor.

4.2.1.4.1 Cell/Module Level DUTs.

- **Temperature:** If the previous test temperature is not equal to the desired test temperature, set the chamber temperature such that the cell surface temperature reaches the test temperature and then soak for at least six hours. If previous test temperature is equal to the desired test temperature and the cell surface temperature is equal to the desired test temperature, continue immediately.
- **Humidity:** Uncontrolled, monitored.

© Copyright 2012 General Motors Company All Rights Reserved

Documents Document Sharing Hub
Copyright General Motors Company
Provided by IHS Markit under license with General Motors Company
Reproduction, distribution or publication of these standards is expressly prohib
Licensee=/, User=,
Not for Resale,
Full document details: GMW GMW16465 2012