GM	WORLDWIDE ENGINEERING STANDARDS	Test Procedure	GMW17409

Corrosion Test for Seal Compounds

1 Introduction

Note: Nothing in this standard supercedes applicable laws and regulations.

Note: In the event of conflict between the English and domestic language, the English language shall take precedence.

1.1 Purpose. This procedure evaluates the contact corrosion potential of elastomer seal and O-ring compounds on machined metal surfaces.

1.2 Applicability.

1.2.1 Test results are compared to five (5) graduated contact corrosion levels shown in Figure 7. A scale rating is assigned that is the closest to the test result.

1.2.2 The desired maximum contact corrosion rating is listed in the relevant GM document/print. A zero or low corrosion (C) number is desired.

1.3 Remarks.

1.3.1 This procedure is primarily intended for crankshaft seals on machined steel shafts. The test is intended to screen compounds in contact with sensitive shaft surfaces that may exhibit high corrosion tendencies.

1.3.2 Shaft corrosion can lead to surface pitting and progressive loss of effective seal contact to prevent leakage.

1.3.3 SAE J403, grade 1020 cold roll carbon steel stock is used for its sensitivity to corrosion for a short test period. Actual production shaft materials will provide different results.

2 References

Note: Only the latest approved standards are applicable unless otherwise specified.

2.1 External Standards/Specifications.

ASTM A109	ASTM D1193	SAE J403
ASTM B733	QQ-S-698	

2.2 GM Standards/Specifications.

GMW16676

2.3 Additional References.

- LPS Precision Clean, Tucker, GA, http://www.lpslabs.com/ or http://www.lpslabs.com/product_pg/degreasers_pg/PrecisionClean.html
- McMaster Carr, Elmhurst, Illinois, www.mcmaster.com

3 Resources

3.1 Facilities. A suitable area or room for conducting testing with a stable and known environment.

3.1.1 Calibration. The test facilities and equipment shall be in good working order and shall have a valid calibration label.

3.1.2 Alternatives. Alternative test facilities and equipment may also be used. However, all measuring variables as specified in this standard shall be determined correctly with respect to their physical definition.

3.2 Equipment.

© Copyright 2020

Documents
Document Sharing Hub

Copyright General Motors
Provided by IHS Markit under license with General Motors

Full document details: GMW GMW17409 2020

3.2.1 Test Fixture Plates. SAE J403, grade 1020 steel, electroless nickel plated per ASTM B733, Type V, SC1 (approximately 5 µm thick) Class 3, and ground on the exposed surfaces only to remove all nickel plate with machining axis parallel to length and indicated in Figure 1. Machine the lower and upper plates facing the test specimen with Ra between 0.2 µm and 0.3 µm. Surface measurements follow GMW16676 protocol. Apply a protective rust inhibitor until ready for use.

For grinding, the ratio of $\frac{Ra}{Rz}$ must be between 0.1 µm and 0.17 µm. Using this ratio, the permitted Rz range shall be between 2 µm and 3 µm.

Note: See 7.1 Glossary for definition of Ra and Rz.

3.2.2 Machine Bolt. Hex head M5-0.8 × 40 mm long steel, nickel plated optional. Two (2) per fixture.

3.2.3 Wing Nuts. M5-0.8, steel, nickel plated optional. Two (2) per fixture.

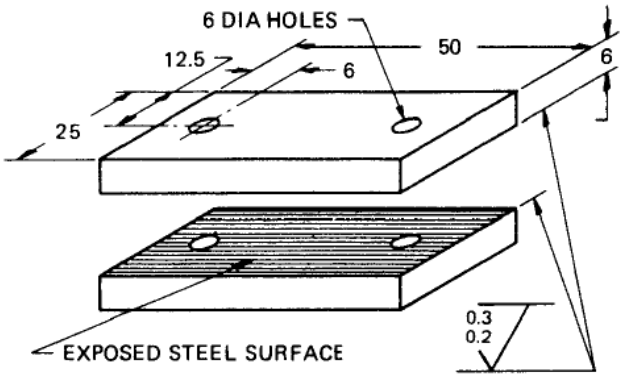

Note: DIA = Diameter

Figure 1: Test Plate Fixture (Dimensions in Millimeters are Approximate)

3.2.4 Wire. Aluminum of thickness required to adequately support one test fixture for the test duration.

3.2.5 Mounting Rack, Plastic. Similar or identical to Figure 2.

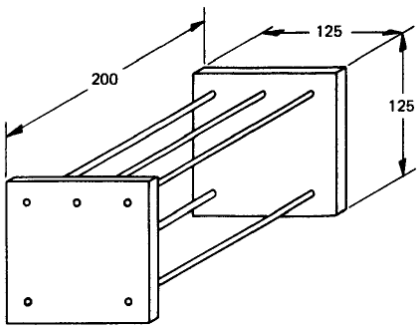

Figure 2: Plastic Rack (Dimensions in Millimeters)

3.2.6 Desiccator (Modified Humidity Chamber). Glass, 250 mm inside diameter with a 6 mm hole drilled in the top cover (Figure 3).

3.2.6.1 Humid Test Alternative. The apparatus for the humidity stage shall have the ability to maintain the following environmental conditions:

- Temperature: 38 °C ± 2 °C
- Humidity: Approximately 100% Relative Humidity (RH)

© Copyright 2020

Documents
Document Sharing Hub
Copyright General Motors
Provided by IHS Markit under license with General Motors
Full document details: GMW GMW17409 2020

The apparatus shall consist of a fog/environmental chamber, suitable water supply conforming to ASTM D1193, Type IV, provisions for heating the chamber and the necessary means of control.

Figure 3: Desiccator

3.2.7 Distilled Water. To be placed in the bottom of the desiccator.

3.2.8 Oven. Large enough to hold the desiccator and provide a uniform chamber temperature control of 38 °C ± 2 °C.

3.2.9 Bolt Shims. Use metal shim sheet in 0.1 mm increments (washer's width Outer Diameter/Inner Diameter (OD/ID) same diameter as fastener ID under bearing area pattern to fit bolt). Thickness tolerance varies with purchased shim height. Order stainless steel shim stock cold rolled. Type 301/302/304 stainless steel metric strips, full hard temper or low carbon steel shim stock cold rolled. Type 1008/1010 low carbon steel, full hard temper hardness (Rockwell B90) meeting ASTM A109 and Federal Specification QQ-S-698. All shims must be metric sizes only (no English equivalents) from McMaster Carr or equivalent catalog.

3.3 Test Vehicle/Test Piece.

3.3.1 Lip Seal. A 25 mm radial segment of the seal lip at the inside diameter is cut on a band saw (see Figure 4).

3.3.2 O-ring. Test two (2) 180-degree segments completely inside the fixture plates. There shall be no coatings on the tested O-ring.

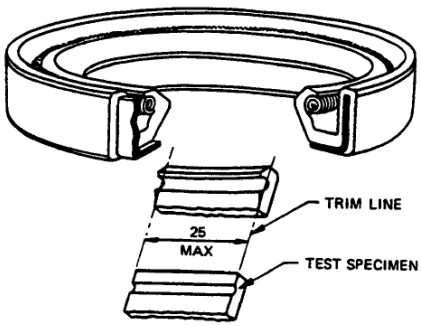

Note: MAX = Maximum

Figure 4: Lip Seal Test Specimen

3.4 Test Time.

Calendar time:	5 d
Test time:	96 h
Coordination time:	8 h

3.5 Test Required Information. See 4.3.2.

© Copyright 2020

Documents
Document Sharing Hub
Copyright General Motors
Provided by IHS Markit under license with General Motors
Full document details: GMW GMW17409 2020