GM	WORLDWIDE ENGINEERING STANDARDS	General Specification	GMW17655

CTS - HVAC Local Interconnect Network (LIN) Actuator

1 Introduction

Note: Nothing in this standard supercedes applicable laws and regulations.

Note: In the event of conflict between the English and domestic language, the English language shall take precedence.

1.1 Purpose. The purpose of this standard is to clearly communicate the component requirements for the General Motors (GM) Heating Ventilation and Air Conditioning (HVAC) Local Interconnect Network (LIN) actuator.

1.2 Applicability. This standard is applicable to any HVAC actuator that utilizes an electrical architecture that requires LIN communication for proper HVAC actuator functionality.

1.3 Remarks.

1.3.1 This document describes the features of a bus system which permits communication between an Electronic Control Unit (ECU) and different actuators in a vehicle HVAC unit. The protocol is based on the bus protocol ISO 17987.

2 References

The latest version of the GMW specifications shall be obtained by contacting Information Handling Services at (800) 854-7179. Contact Information Handling Services for its complete list of available documents. NOTICE: Publications are revised regularly; confirm most recent release.

Note: Only the latest approved standards are applicable unless otherwise specified.

2.1 External Standards/Specifications.

ELV Directive	FMVSS 302	SAE J2602-1	USCAR21
EN 1652	ISO 17987	SAE J2602-2	USCAR25
EWCAP-10001	SAE J2602	USCAR2	

2.2 GM Standards/Specifications.

GMW3059	GMW3232	GMW14573	GMW16331
GMW3091	GMW3235	GMW14872	GMW16853
GMW3097	GMW3259	GMW15010	GMW16880
GMW3116	GMW3600	GMW15049	GMW17388
GMW3172	GMW14270	GMW15760	GMW17625
GMW3191	GMW14482	GMW15862	

2.3 Additional References.

- CG2695, System Safety Process (ID)
- CG2990, HVAC Actuator SOR Appendix G3 (ID)
- CG3796, Connector and Terminal Design Requirements (ID)
- CG4080, LIN Questionnaire (ID)
- CG5955, On Board Diagnostics (ID)
- Detail drawings
- Electrical Appendix G2 documents
- Engineering drawings

© Copyright 2021 General Motors Company All Rights Reserved

Documents Document Sharing Hub

Copyright General Motors
Provided by IHS Markit under license with General Motors

Full document details: GMW GMW17655 2021

- GB5105
- GB7100
- GM Design Guidelines
- GM part number 13511018 (Tyco part number 2294218-1)
- GM Recycling Design Guidelines
- Key Characteristics Designation System (KCDS) Process requirements
- LIN Supplier Questionnaire
- Process Review Based on Failure Modes
- Recyclability Checklist
- Recycled Content Report Form
- SCS-055: Design Failure Modes and Effects Analysis (DFMEA) Report
- Serial Data Test Report
- SOR Appendix G3, F13
- Validation Cross Reference Index (VCRI)

(ID) = This reference is limited to internal distribution within General Motors and shall not be distributed outside this company. Contact the GM Lead Engineer for further instructions.

3 Requirements

3.1 System/Subsystem/Component/Part Definition.

3.1.1 Appearance.

Appearance and finish of parts shall be free of flash and ridges.

3.1.2 Content.

LIN Actuators as described within this specification are to be utilized for HVAC applications only. This includes the movement of HVAC temperature doors, HVAC mode doors, and HVAC air intake doors.

3.1.2.1 Physical Content.

Provide pictures/illustrations showing bill of material which are part of the assembly.

3.1.2.2 Functional Content.

Functional content will be defined throughout this requirement.

3.1.3 Ambient Environment.

The actuator shall function without any loss in functionality or performance when subjected to ambient temperatures of (-40 to 85) °C and an input voltage between (9 and 16) V unless otherwise noted.

3.1.4 Interfaces.

3.1.4.1 Electrical Interface Requirements.

3.1.4.1.1 Electrical Connector Interface Requirements.

The connector shall have the pinout as defined in Figure 1.

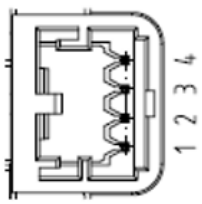

Pins	Description
1	GND
2	LIN
3	Address pin
4	Power Supply Input (Vbat)

Figure 1: Connector

© Copyright 2021 General Motors Company All Rights Reserved

Documents
Document Sharing Hub
Copyright General Motors
Provided by IHS Markit under license with General Motors
Full document details: GMW GMW17655 2021

a. Connection according to GM part number 13511018 (Tyco part number 2294218-1).

b. The electrical/electronic components shall comply with the connector recommendation from the connector Bill of Material (BOM) Family Owner, and Connector and Terminal Design (CG3796), USCAR21, EWCAP-10001, USCAR25 (ergonomics), and USCAR2. The supplier shall work with the GM Design Responsible Engineer to comprehend this requirement.

c. The connector used in the component shall comply with GMW3191 Connector Test and Validation Specification.

3.1.4.1.1.1 Connector Requirements for Subsystem Components.

a. Connectors shall meet or exceed SAE/USCAR-2.

b. Detailed performance and testing procedures/specifications are available from the following document: SAE/USCAR-2 Standard for Automotive Electrical Connection System.

c. There may be cases where the device itself will not meet these test specifications. In those cases, agreement between the wiring and device Release Engineers is required to deviate from these specifications.

3.1.4.1.2 General Electrical Requirements.

a. HVAC LIN Actuators shall meet GB5105 (LIN Slave Communication Strategy Specification), and GB7100. Please contact GM Technical Specialist to get these documents.

3.1.4.2 Mechanical Interface Requirements.

The Key Characteristics Designation System (KCDS) Process requirements shall be followed per GMW15049.

Figure 2 and Figure 3 shall be used for the mounting and interface dimensions to the HVAC module and shall be included as Key Characteristics on the final drawing.

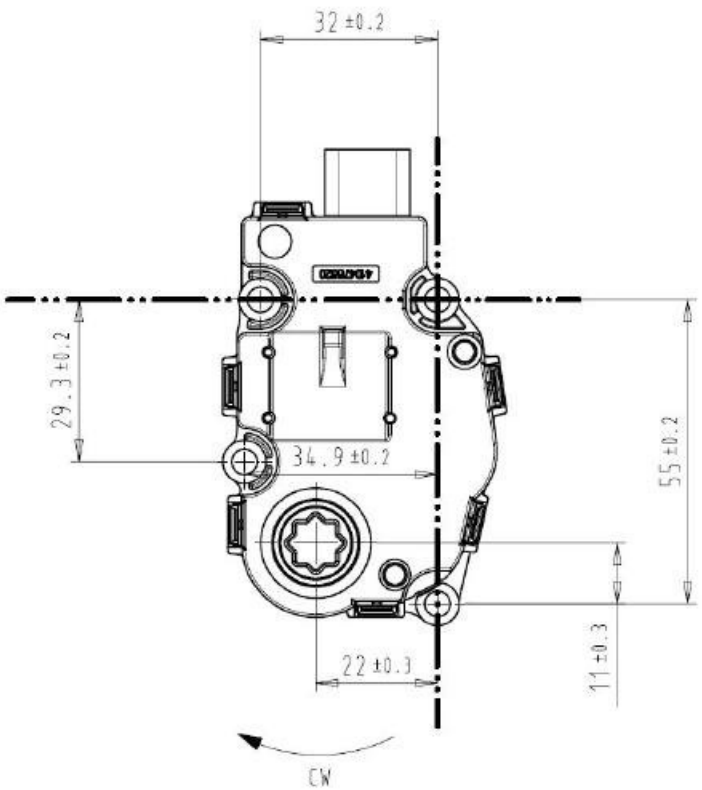

Fixing point dimension:

A: Diameter 4.6 mm

B: Dome length 7.0 mm

C: Dome top to Output shaft 16.4 mm

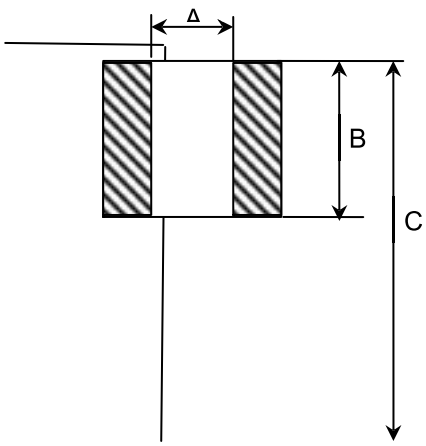

Note: All dimensions are in mm.
CW Clockwise rotation; defines the clockwise rotation of the actuator.

Figure 2: Actuator Footprint, Mounting and Rotation

© Copyright 2021 General Motors Company All Rights Reserved

Documents
Document Sharing Hub
Copyright General Motors
Provided by IHS Markit under license with General Motors
Full document details: GMW GMW17655 2021

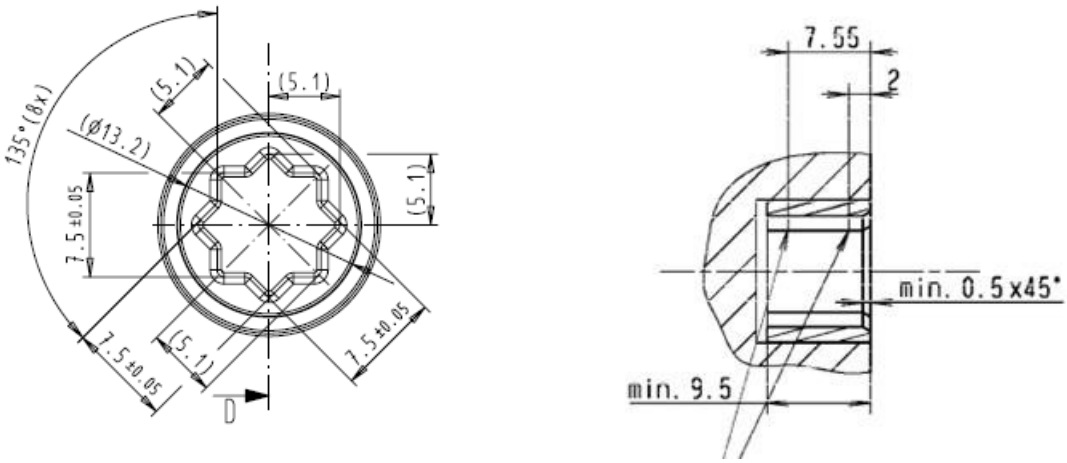

Note: All dimensions are in mm.
Min. Minimum.

Figure 3: Female Output Shaft

3.1.5 Usage Definition.

a. The HVAC LIN Actuator is to move the HVAC Temperature door, HVAC mode door, or the HVAC air intake door in any zone in the vehicle (i.e., front right, front left, rear right, rear left).

3.1.6 Safety and Security Requirements.

General Motors System Safety Process shall apply to the HVAC LIN Actuator because it participates in the implementation of one or more safety critical features on the vehicle. The highest Automotive Safety Integrity Level (ASIL) identified for the Safety Critical features the HVAC LIN Actuator supports is ASIL-A. The HVAC LIN Actuator shall be designed to meet Quality Metric A (QM(A)) requirements detailed in 3.1.6.

The HVAC LIN Actuator shall meet the Fault Detection Times specified in Table 3. The Fault Detection Time shall include the time from the fault starts until the respective action is taken.

3.1.6.1 Safety Feature List.

The HVAC LIN Actuator participates in the front windshield Defog/Defrost functionality feature, in a manner that has been deemed to have a Functional Safety implication.

3.1.6.2 Commodity Level.

The HVAC LIN Actuator being sourced is categorized as a Level 3 commodity per GM's System Safety Process. The HVAC LIN Actuator and the development process used for the HVAC LIN Actuator shall satisfy the applicable GM System Safety Process requirements as documented in CG2695 System Safety Process Level 3 Statement of Requirements (SOR). The supplier shall work with the GM Design Responsible Engineer to comprehend this requirement.

3.1.6.3 Preliminary Hazard Analysis Summary.

During the development process the HVAC LIN Actuator Supplier needs to consider the following hazards identified in Table 1 that are Safety related behaviors supported by the HVAC LIN Actuator.

© Copyright 2021 General Motors Company All Rights Reserved

Documents
Document Sharing Hub
Copyright General Motors
Provided by IHS Markit under license with General Motors
Full document details: GMW GMW17655 2021

Table 1: HVAC LIN Actuator Hazard Identification (ID)

Hazard ID	Potential System Hazard State	System Level ASIL Rating	System Safety Goal	Component Level ASIL Rating	Component Safety Goal
VisVis_WSW_Haz_03a	Loss of Windshield Defrost/Defog Functiobn	ASIL-A	System shall be designed to minimize loss defog/defrost system (shall meet the Reliability criteria for ASIL-A systems). System shall provide notification to the operator when defog/defrost system failure is detected.	QM(A)	The LIN HVAC Actuator shall be designed and validated to meet the following minimum reliability requirement R:99, C:50 for component. Sub-system shall satisfy GMW3172 validation requirements.

ASIL Automotive Safety Integrity Level.

3.1.6.4 Component Safety Goals.

The following conceptual safety goals are applicable to the HVAC LIN Actuator. At a system level, low diagnostic coverage requirements for the safety related inputs on the LIN Actuator are met through a coordinated activity between the LIN Actuator and the controlling ECU. The following LIN Actuator requirements are created to provide protection against faults that could be interpreted as inadvertent activation. This goal exists because inadvertent activation can adversely affect performance of Defog/Defrost. For example, changing or blocking air flow distribution may result in degraded or complete loss of function.

a. In case of over-current, thermal or other faults, the LIN HVAC module shall park itself in a known safe state based on its location within the HVAC system, to provide best possible Defog/Defrost functionality to the front windshield, before shutting itself off. (This function is labeled the Emergency Run function specified throughout the specification.)

b. LIN Actuator shall only send serial data or status information to the LIN Master Body Control Module (BCM), which will then diagnose and set DTC's and notify the customer of HVAC Defog/Defrost failure.

c. At the start of each drive cycle the BCM shall be able to detect loss of communication with the HVAC LIN Actuator and set related DTC and possibly Malfunction Indicator Lamp (MIL), and report via the Instrument Panel Cluster (IPC) a message to the customer.

d. In case of loss of communication, the LIN Actuator shall park itself in a known safe state (end stop) based on its location within the HVAC system to provide best possible Defog/Defrost functionality to the front windshield based on HVAC module design.

e. The LIN HVAC Actuator shall be designed and validated to meet the following minimum reliability requirement R99C50 for component. The HVAC LIN Actuator shall satisfy GMW3172 validation requirements.

3.1.6.5 Allocated Component HW Safety Requirements.

The following safety requirements in Table 2 are applicable to the HVAC LIN Actuators defined in this document. The supplier shall meet these requirements and provide traceable evidence in the Analysis, Development, Validation Plan and Report (ADVP&R) substantiating that these requirements have been met. The component's hardware and software design shall satisfy all of these requirements.

© Copyright 2021 General Motors Company All Rights Reserved

Documents
Document Sharing Hub

Copyright General Motors
Provided by IHS Markit under license with General Motors

Full document details: GMW GMW17655 2021

Table 2: Safety Requirements

Requirement ID	Requirement Description
Controller:	
SSCR-01	Upon detection of, Stuck CPU/ALU, stuck registers, incorrect program flow, clock [self-test is sufficient] the LIN Actuator Controller shall set "**Internal Operation Fault Present**."
SSCR-02	Upon detection of, A/D Converter (stuck open or stuck closed), the LIN Actuator Controller shall set "**Internal Operation Fault Present**."
SSCR-03	Upon detection of, Memory overflow/underflow, stuck memory, the LIN Actuator Controller shall set "**Internal Operation Fault Present**."
SSCR-04	Upon detection of, Power Supply(s) (Under-Voltage/Over-Voltage), the LIN Actuator Controller shall set "**Internal Operation Fault Present**."
Serial Communication:	
SSCR-05	Any failure in LIN Actuator Component that can compromise the operation of the actuator functionality, shall be detected by the BCM using LIN serial data, within 12 000 ms.
SSCR-06	Upon loss of communication for > 4000 ms, the LIN Actuator shall perform an Emergency Run function to move to an end stop position that provides the best Defog/Defrost capability.
HVAC LIN Actuator:	
SSCR-07	Software coding and design shall meet QM(A) integrity requirements as documented in the SOR Appendix F13.
SSCR-08	The LIN Actuator shall be designed and validated to meet the following minimum reliability requirement R99C50 for component.
SSCR-09	HVAC LIN Actuator Subsystem shall satisfy GMW3172 validation requirements.

3.1.6.6 External Safety Critical Input/Output (I/O).

Specifics on the allocation of an ASIL Level for each I/O pin and the maximum allowable failure detection time are contained in this 3.1.6.6. Failure modes and Severity associated with the safety critical I/O are noted in 3.1.6.8 DFMEA Failure Modes and Severity Levels. The maximum allowable failure detection time in 3.1.6.6 is applicable to any failure condition that results in a severity of 8 or 9. The maximum allowable failure detection time is defined in Table 3.

Table 3: Maximum Allowable Failure Detection Time

Signal Names	Signal Type	ASIL Level	Maximum Diagnostic Detection Time (ms)
Battery	Power	QM(A)	12 000
Ground	Power	QM(A)	12 000
Serial Data (LIN)	LIN Serial Data	QM(A)	12 000
Address PIN (LIN ID) – Float High or tied to Ground	Input	QM(A)	12 000

3.1.6.7 Internal Safety Critical Components.

All internal core components must be analyzed to determine if the internal core components can lead to a violation of any of the safety requirements or can create any of the failure modes identified in 3.1.6.8 DFMEA Failure Modes and Severity Levels. GM's analysis indicates that special consideration should be given to the following listed design elements during the DFMEA. Any failures that result in any of the safety requirements not

© Copyright 2021 General Motors Company All Rights Reserved

Documents
Document Sharing Hub
Copyright General Motors
Provided by IHS Markit under license with General Motors
Full document details: GMW GMW17655 2021

being satisfied or that lead to any of the conditions in the DFMEA failure mode section being realized must be assigned a Severity of 10. Refer to Table 4 for the ASIL assignment for the internal components.

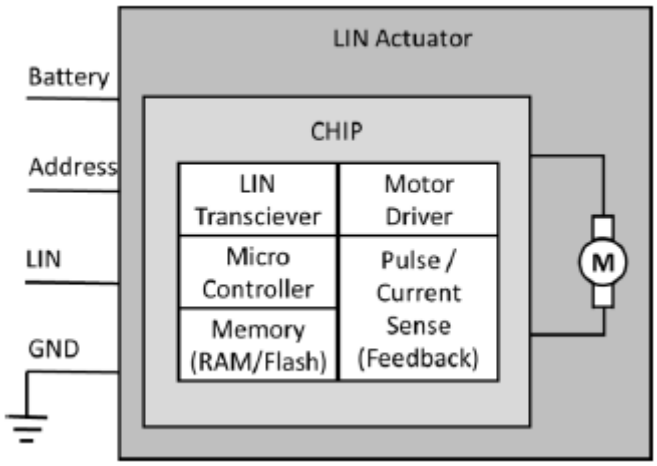

Figure 4: High Level Block Diagram

Figure 4 is only a concept discussion graphic.

Table 4: Internal Component ASIL Assignment

Component	Related Safety Function	System Safety Requirement	Applicable ASIL Level or HW Integrity Level
CPU/ALU	Front Windshield Defog/Defrost functionality	SSCR-01	QM(A)
Clock/Frequency References	Front Windshield Defog/Defrost functionality	SSCR-01	QM(A)
Internal Registers	Front Windshield Defog/Defrost functionality	SSCR-01	QM(A)
Internal Memory	Front Windshield Defog/Defrost functionality	SSCR-03	QM(A)
Analog-to-Digital Conversion	Front Windshield Defog/Defrost functionality	SSCR-02	QM(A)
Watchdog	Front Windshield Defog/Defrost functionality	SSCR-01	QM(A)
Power Supply	Front Windshield Defog/Defrost functionality	SSCR-04	QM(A)
Serial Data Interface Logic (LIN)	Front Windshield Defog/Defrost functionality	SSCR-05, SSCR-06	QM(A)

3.1.6.8 DFMEA Failure Modes and Severity Levels.

Supplier shall perform a DFMEA for the commodity /component in scope. Any failure mode that leads to a loss of communication must be given a Severity Rating of 9.

The failure modes listed in Table 5 have been determined from GM's internal DFMEAs as creating a hazard condition or being able to lead to the hazard condition. Table 5 is not intended to include all possible product

© Copyright 2021 General Motors Company All Rights Reserved

Documents
Document Sharing Hub
Copyright General Motors
Provided by IHS Markit under license with General Motors
Full document details: GMW GMW17655 2021

failure modes. For the failure modes identified in Table 5 the supplier shall use the associated Severity in their component level DFMEA activity. A summary of the DFMEA shall be provided as outlined in the SOR Appendix F13 using SCS-055: Design Failure Modes and Effects Analysis (DFMEA) Report.

Table 5: Failure Mode Severity Level

Failure Mode	Severity Level
Unintended operation of LIN HVAC Actuator (operation without a physical input from vehicle driver or occupant).	8
Loss of operation of the LIN HVAC actuator.	8
Delayed operation of the LIN HVAC actuator.	8
Incorrect operation of the LIN HVAC actuator.	8
Delayed/missing/repeated/corrupted transmission of LIN HVAC actuator status information over LIN serial interface.	8
Loss of communication between the LIN HVAC actuator and the BCM.	9

3.2 Product Characteristics.

3.2.1 Performance Requirements.

3.2.1.1 General Performance.

a. Conditions in Table 6 are (-40 °C to 85) °C at (9 to 16) V unless otherwise noted.

Table 6: Performance Requirements

Performance Description	Unit	Conditions	Min	Nominal	Max	Comments
Iact (Without I Address Pin)	[mA] RMS	Stop Coil Off	-	6.8	13	-
		Stop Coil On	-	-	40	-
		Run (all Speed)	-	-	270	-
		Stall (all Speed)	-	-	350	For the time needed to detect the end stop
Speed	[rpm]	speed0	2	3	3.15	-
		speed1	3.16	4	4.2	-
		speed2/speed3	4.21	5	5.25	-
Pull-In	[cNm]	speed0 @ 9.7 V/-40 °C	40	-	-	-
		speed1 @ 9.7 V/-40 °C	35	-	-	-
		speed2 @ 9.7 V/-40 °C	35	-	-	-
Pull-Out	[cNm]	All speed	-	-	100	-
		speed0 @ 9.0 V/-40 °C	50	-	-	-
		All speeds @ 14.0 V/23 °C/90% RH	50	-	-	-
Holding Torque	[cNm]	Coils not supplied	100	-	-	-

© Copyright 2021 General Motors Company All Rights Reserved

Documents
Document Sharing Hub
Copyright General Motors
Provided by IHS Markit under license with General Motors
Full document details: GMW GMW17655 2021

Performance Description	Unit	Conditions	Min	Nominal	Max	Comments
Noise	[sone]	23 °C/13.5 V/speed0,1,2 40 cNm Microphone @ 100 mm	-	-	2.5	See 4.1.10 Actuator Noise Testing" for further details
Axial Clearance	[mm]	+5 N and -5 N applied on output shaft 23 °C	-	-	0.7	After durability test
Tilding Play	[mm]	+5 N and -5 N applied @ 8 mm from output shaft 23 °C	-	-	0.3	After durability test
Gear Backlash	[°]	Actuator not supplied	-	-	1.5	Before durability test
		+5 cNm and -5 cNm on the output shaft 23 °C	-	-	3.0	After durability test
Temperature	[°C]		-40	-	+85	-
Weight	[g]		-	-	65	-
Duty Cycle	[%]		-	-	100	On Time
Parasitic Current	[µA]	The quiescent current not exceed for a unit that is not active but power supplied: (Only CL30 and CL31 connected) 40 °C to +85 °C and voltage = (13 ± 0.2) V	-	100		-
	[mA]	The quiescent current shall not be exceeded for a unit that is not active but power supplied with address pin connected to ground: (40 to +85) °C and voltage = (13 ± 0.2) V	-	-	1.2	-

Min Minimum.
Max Maximum.
RH Relative Humidity

3.2.1.2 Reverse Polarity.

Reverse polarity is included in the ECU (Master). Such protection is not included in the actuator.

3.2.2 Physical Characteristics.

3.2.2.1 Dimensions and Capacity.

a. All dimensions to be approved by GM Engineering during the design of the component.

b. Perform dimensional study and provide supplier (as appropriate) with a drawing specifying dimensions and tolerance.

3.2.2.2 Mass Properties.

The LIN Actuator shall not weigh > 65 grams per Table 6, Performance Requirements.

3.2.3 Reliability.

© Copyright 2021 General Motors Company All Rights Reserved

Documents
Document Sharing Hub
Copyright General Motors
Provided by IHS Markit under license with General Motors
Full document details: GMW GMW17655 2021

This section (3.2.3) contains the reliability requirements for the component and/or subsystem. Reliability is defined as the probability of a product performing its intended function(s) in a manner which meets customer expectations, for a given period of time and/or miles, under stated conditions.

The HVAC LIN Actuator shall demonstrate a reliability of 99% at a 50% confidence level (R99C50), assuming a Weibull slope (Beta) of 2.0. Supplier shall demonstrate this reliability for Design Validation (DV) and Process Validation (PV) separately. PV parts shall be selected according to GMW15760.

Refer to 4.1 for the reliability testing details of the HVAC LIN Actuator.

3.2.3.1 Reliability Evaluation Point.

The Reliability Evaluation Point for this component is per the HVAC Subsystem Technical Specification (SSTS) requirements, GMW17625.

3.2.3.2 Reliability Requirements.

The supplier is responsible for demonstrating the reliability statistically for both DV and PV separately by means of either analytical methods or physical tests.

3.2.4 Serviceability.

The HVAC LIN Actuators will be installed into and removed from the vehicle matching parts, a total of 12 times. The LIN Actuators shall have fit, form, and function at the end of the twelfth installation and removal. Fasteners are not considered part of the component under test.

The HVAC LIN Actuator service parts shall comply with GMW15010.

3.2.5 User System/Subsystem/Component/Part Interface.

See 3.2.2.1 Dimensions and Capacity for component interface requirements.

3.3 Design and Construction.

3.3.1 Materials, Processes and Parts Selection Guidelines.

a. General material requirements shall follow GMW14270.

b. Materials used in HVAC LIN Actuator shall meet specifications according to GMW3235 – B – T1 – 2 mg maximum.

3.3.1.1 Material Guidelines.

a. All materials supplied to this standard shall comply with GMW3059, Restricted and Reportable Substances, including the requirement to submit a full material composition disclosure to GM via the International Material Data System (IMDS).

b. Supplier is responsible for designing recyclable and recoverable parts using GMW3116.

c. All materials shall comply with GMW16853, Comprehensive Standard for Overall Emission Testing of Interior Materials and Parts (Fogging, Odor, Emissions, Carbonyls, Amines).

d. The material flammability shall meet GMW3232 (Test Method for Determining the Flammability of Interior Trim Materials) and FMVSS 302 (Flammability of Interior Materials).

e. Motor assembly must not use rare-earth materials unless specifically disclosed to and approved by GM.

f. The material Mildew Resistance shall meet GMW3259.

g. For copper/copper alloys use EN 1652.

h. Color of all HVAC LIN Actuator external surfaces visible after installation into the HVAC module (except part number label) shall be black.

3.3.1.1.1 Recycling Guidelines.

Materials developed to this specification shall be optimized to provide maximum end-of-life cycle value utilizing the Recyclability Checklist, GM Recycling Design Guidelines, and the End-of-life Vehicle (ELV) Directive. Recycled content shall be reported to the approving and procuring Materials Engineering Department utilizing the Recycled Content Report Form. Reference the Recyclability/Recoverability Guidelines, GMW3116.

3.3.1.2 Processes Guidelines.

a. All production LIN Actuators shall be manufactured using the same design and processes used to manufacture the originally approved samples. No change is permissible without prior written approval from the responsible General Motors Design Engineer.

© Copyright 2021 General Motors Company All Rights Reserved

Documents
Document Sharing Hub

Copyright General Motors
Provided by IHS Markit under license with General Motors

Full document details: GMW GMW17655 2021

b. If changes are deemed necessary or required by the supplier, the supplier shall furnish a DRBFM and a Process Review Based on Failure Modes to the responsible GM Design Engineer for approval.

3.3.1.3 Parts Guidelines.

3.3.2 Design Guidelines and Constraints.

LIN Actuators shall meet the design specifications on the detail drawings approved by the GM Design Engineer.

3.3.3 Identification and Marking.

a. Identification and markings shall be in accordance with GM design guidelines and requirements and approved by the GM Design Engineer. GM design guidelines and requirements include GMW16331, GMW16880, and GMW14573. The HVAC LIN Actuator is classified as "No Special Characteristics" and "Class J" for GMW14573.

b. It is recommended for the Identification and Marking to include the GM part number with the last four (4) digits enlarged, and a barcode. These markings will allow for mistake proofing or error proofing the assembly at any HVAC module supplier.

c. The Identification and marking shall not include any logo.

d. See Figure 5 for an example of an approved label.

Figure 5: Example of an Approved Label

3.3.3.1 Bar Code.

a. The bar code shall comply with the requirements in GMW15862.

b. Content of the bar code shall include the part number, date of manufacture, line code and shift code. Additional information may be included with the GM Design Engineer approval.

c. The barcode should be a two-dimensional data matrix barcode.

3.3.4 Workmanship.

a. Key Product Characteristics (KPC) will be defined on the GM approved engineering drawings.

b. LIN Actuators shall have manufacturing capability such that all dimensions are targeted at print nominal.

3.3.5 Interchangeability. Not applicable.

3.4 Documentation.

3.4.1 Failure Mode and Effects Analysis (FMEA).

Detailed design and process FMEAs shall be reviewed and approved with the GM Design Engineer and Validation Engineer. The FMEA shall be updated each time a change occurs.

3.4.2 Design Validation.

© Copyright 2021 General Motors Company All Rights Reserved

Documents
Document Sharing Hub
Copyright General Motors
Provided by IHS Markit under license with General Motors
Full document details: GMW GMW17655 2021

a. All test samples must be qualified dimensionally. All data points must be reported. All test specimens must be retained by the supplier for a minimum of one (1) year and supplied to the GM Design Engineer and or Validation Engineer for review, upon request.

b. Samples of components or material released to this standard shall be tested for conformity with the requirements of this standard and approved by the responsible GM Design Engineer prior to the start of delivery of production level components or materials.

c. Any change to the component or material, e.g., design, function, properties, manufacturing process and/or location of manufacture, requires a new release approval of the product. It is the sole responsibility of the supplier to provide the customer, unsolicited, with documentation of any change or modification to the product/process, and to apply for a new release approval.

d. If not otherwise agreed to, the entire verification and or validation tests shall be repeated and documented by the supplier prior to start of delivery of the modified or changed product. In some cases, a shorter test can be agreed to between the responsible GM Design Engineer and the supplier.

e. All requirements contained in 4.1.1 must be met to pass Design Validation. Any noncompliance during this phase must be documented and resolved before validation is considered complete.

3.4.3 Product Verification.

Documentation shall be through the normal PPAP process.

3.4.4 Revalidation Requirements.

Any change in design, material, or processing from that previously approved for production, requires prior approval and revalidation, as determined by the applicable GM Design Engineer and Validation Engineer.

3.5 Support of System/Subsystem/Component/Part After Sale. Not applicable.

3.6 System/Subsystem/Component/Part Operator Training. Not applicable.

3.7 System/Subsystem/Component/Part Characteristics.

3.7.1 System/Subsystem/Component/Part Definition.

3.7.1.1 LIN Definition.

3.7.1.1.1 Address Catalogue.

a. Each Slave on the bus has its own Node ADdress (NAD) which is unique and coded with 8 bits. The NAD for a SAE J2602 device shall be in the range 0x60 to 0x6D, where the lower bits of the NAD contains a four bits Device Node Number (DNN). The higher bits of the NAD are fixed to 0x6.

b. Each actuator will be delivered with an address (one per part number). This address is composed as follows in Table 7.

Table 7: NAD Composition

	Bit7	Bit6	Bit5	Bit4	Bit3	Bit2	Bit1	Bit0
NAD	0	1	1	0	DNN3	DNN2	DNN1	DNN0
	Fixed to 0x6				Address pin	In function of the part number		
	0	1	1	0	0 /1	x	x	x

c. The following NADs in Table 8 are reserved:

© Copyright 2021 General Motors Company All Rights Reserved

Documents
Document Sharing Hub
Copyright General Motors
Provided by IHS Markit under license with General Motors
Full document details: GMW GMW17655 2021

Table 8: Address Definition

Address pin	P/N 1	P/N 2	P/N 3
To GND (alternative NAD)	0x60	0x62	0x64
Open (base NAD)	0x68	0x6A	0x6C

P/N Part Number

d. The auto-addressing concept is not considered by GM. Consequently, a hardware addressing method with an address pin needs to be used. This addressing method limits the number of actuators on the bus to six (6). The Ini NAD is 0x70 which is the default NAD before any NAD programming. The different part numbers are available only after a programming sequence. "Base NAD" will be programmed in Electrically Erasable Programmable Read Only Memory (EEPROM) with the ACT_CMF_NAD frame.

3.7.1.1.2 Random Access Memory (RAM) - EEPROM NAD.

The base Slave NAD is stored in EEPROM. After every wakeup cycle, the NAD address is read from EEPROM and stored in RAM. The actuator will react only on its RAM NAD. The RAM NAD is set as follows:

a. After a POR each actuator tests the validity of the NAD saved in EEPROM. If this test is performed without error, the EEPROM NAD is copied to RAM. If the NAD is corrupted during the copying process from EEPROM to RAM, the routine shall be retired 3 times until a valid NAD is copied. A valid NAD will be in the range of 0x60 to 0x6D. If the NAD saved in EEPROM is corrupt or no NAD is programmed in EEPROM, the RAM NAD shall be set to a default NAD (0x70) and the actuator will only react to this address. Software will check if the RAM NAD is in the range from 0x60 to 0x6D. If not, all messages ID are marked as invalid and ACT_AFR frames will be ignored.

b. Once a valid base NAD from EEPROM is copied into RAM, the Address PIN evaluation (grounded or not grounded) shall be executed to determine the operating NAD of the actuator. If the Address PIN is not grounded, the RAM NAD shall be the base NAD. If the Address PIN is grounded the RAM NAD shall be the alternate NAD.

c. When no NAD is programmed in the EEPROM, the RAM NAD is set with 0x70. In this case the Address PIN is not taken into account.

d. The address pin shall be evaluated after every wake-up.

e. The actuator supplier shall review NAD determination and management with the actuator BFO and LIN SME (subject matter expert).

3.7.1.1.3 Frame Structure and Library.

For Actuator's frames (AFR), Message ID depends on the NAD. For example, Master must use 0x09 as LIN ID (unprotected) to send the ACT_AFR_SET frame to actuator with NAD 0x62. See Table 9.

Table 9: NAD to Message ID Mapping

NAD	Address Pin	Message ID	Protected ID	Frame
0x60	Grounded	0x00	0x80	ACT_AFR_INI
		0x01	0xC1	ACT_AFR_SET
		0x02	0x42	ACT_AFR_STA
		0x03	Not used	
0x61	N/A	0x04	Not used	
		0x05	Not used	
		0x06	Not used	

© Copyright 2021 General Motors Company All Rights Reserved

Documents
Document Sharing Hub
Copyright General Motors
Provided by IHS Markit under license with General Motors
Full document details: GMW GMW17655 2021

NAD	Address Pin	Message ID	Protected ID	Frame
		0x07	Not used	
0x62	Grounded	0x08	0x08	ACT_AFR_INI
		0x09	0x49	ACT_AFR_SET
		0x0A	0xCA	ACT_AFR_STA
		0x0B	Not used	
0x63	N/A	0x0C	Not used	
		0x0D	Not used	
		0x0E	Not used	
		0x0F	Not used	
0x64	Grounded	0x10	0x50	ACT_AFR_INI
		0x11	0x11	ACT_AFR_SET
		0x12	0x92	ACT_AFR_STA
		0x13	Not used	
0x65	N/A	0x14	Not used	
		0x15	Not used	
		0x16	Not used	
		0x17	Not used	
0x66	N/A	0x18	Not used	
		0x19	Not used	
		0x1A	Not used	
		0x1B	Not used	
0x67	N/A	0x1C	Not used	
		0x1D	Not used	
		0x1E	Not used	
		0x1F	Not used	
0x68	Not connected	0x20	0x 20	ACT_AFR_INI
		0x21	0x 61	ACT_AFR_SET
		0x22	0x E2	ACT_AFR_STA
		0x23	Not used	
0x69	N/A	0x24	Not used	
		0x25	Not used	
		0x26	Not used	
		0x27	Not used	
0x6A	Not connected	0x28	0xA8	ACT_AFR_INI
		0x29	0xE9	ACT_AFR_SET

© Copyright 2021 General Motors Company All Rights Reserved

Documents
Document Sharing Hub
Copyright General Motors
Provided by IHS Markit under license with General Motors
Full document details: GMW GMW17655 2021

NAD	Address Pin	Message ID	Protected ID	Frame
		0x2A	0x6A	ACT_AFR_STA
		0x2B	Not used	
0x6B	N/A	0x2C	Not used	
		0x2D	Not used	
		0x2E	Not used	
		0x2F	Not used	
0x6C	Not connected	0x30	0xF0	ACT_AFR_INI
		0x31	0xB1	ACT_AFR_SET
		0x32	0x32	ACT_AFR_STA
		0x33	Not used	
0x6D	N/A	0x34	Not used	
		0x35	Not used	
		0x36	Not used	
		0x37	Not used	
0x6E	No Message IDs defined			
0x6F	No Message IDs defined			

N/A Not Applicable
STA Status Survey

3.7.1.2 LIN Protocol.

3.7.1.2.1 Subsystem Electrical Mechanization.

The Duplicate LIN Slave Application Block Diagram of Figure 6 illustrates an implementation where more than one of the same LIN Slave device is required. Section 3.7.1.2 deals only with the LIN/SAE J2602 communications between the LIN Master and the LIN Slave, and not with the exact method it will be implemented in the vehicle system.

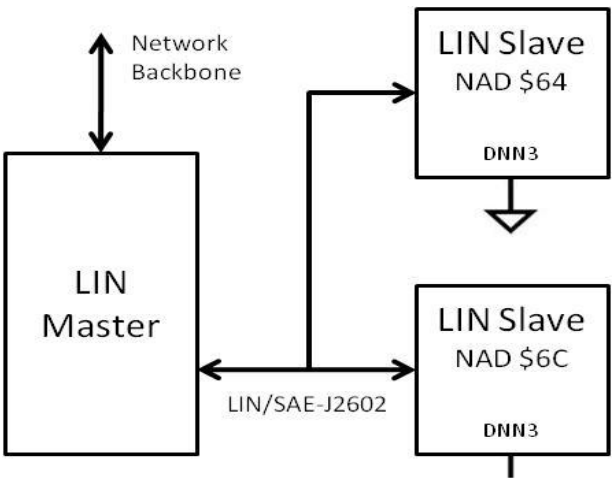

DNN Device Node Number

Figure 6: Duplicate LIN Slave Application Block Diagram

© Copyright 2021 General Motors Company All Rights Reserved

Documents
Document Sharing Hub
Copyright General Motors
Provided by IHS Markit under license with General Motors
Full document details: GMW GMW17655 2021