GM	WORLDWIDE ENGINEERING STANDARDS	General Specification	GMW3266

Hexalobular Socket Pan Head Tapping Screws Product Grade A

1 Introduction

1.1 Purpose. This standard specifies the characteristics of hexalobular socket pan head tapping screws with rounded end. This standard is based on ISO/DIS 14585.

1.2 Applicability. The screws covered by this specification are suitable for use in general engineering and nonstructural attachments.

1.3 Remarks. Designation: GMW3266 thread × 1.

Example: GMW3266 ST 6.3 × 25.

Where:

ST = Screw Tapping

2 References

Note: Only the latest approved standards are applicable unless otherwise specified.

2.1 External Standards/Specifications.

ISO 1478	ISO 4759-1	ISO/DIS 14585	ISO/TS 16949
ISO 2702	ISO 10664		

2.2 GM Standards/Specifications.

GMW3044	GMW3059

2.3 Additional References. None.

3 Requirements

3.1 Dimensions. See Figures 1, 2 and 3 and Tables 1 and 2.

Figure 1: Screw, Tapping, Pan Head

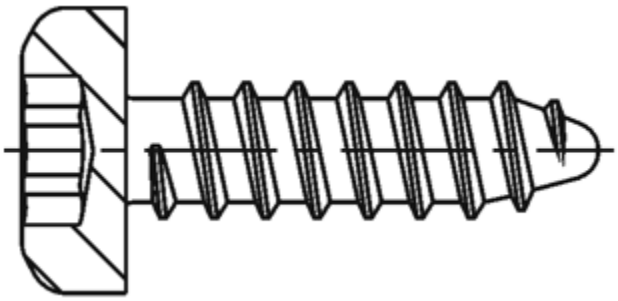

© Copyright 2016 General Motors Company All Rights Reserved

Documents
Document Sharing Hub

Copyright General Motors Company
Provided by IHS Markit under license with General Motors Company
Reproduction, distribution or publication of these standards is expressly prohib
Full document details: GMW GMW3266 2016

Licensee=/, User=,
Not for Resale,

Figure 2: Dimension Illustration

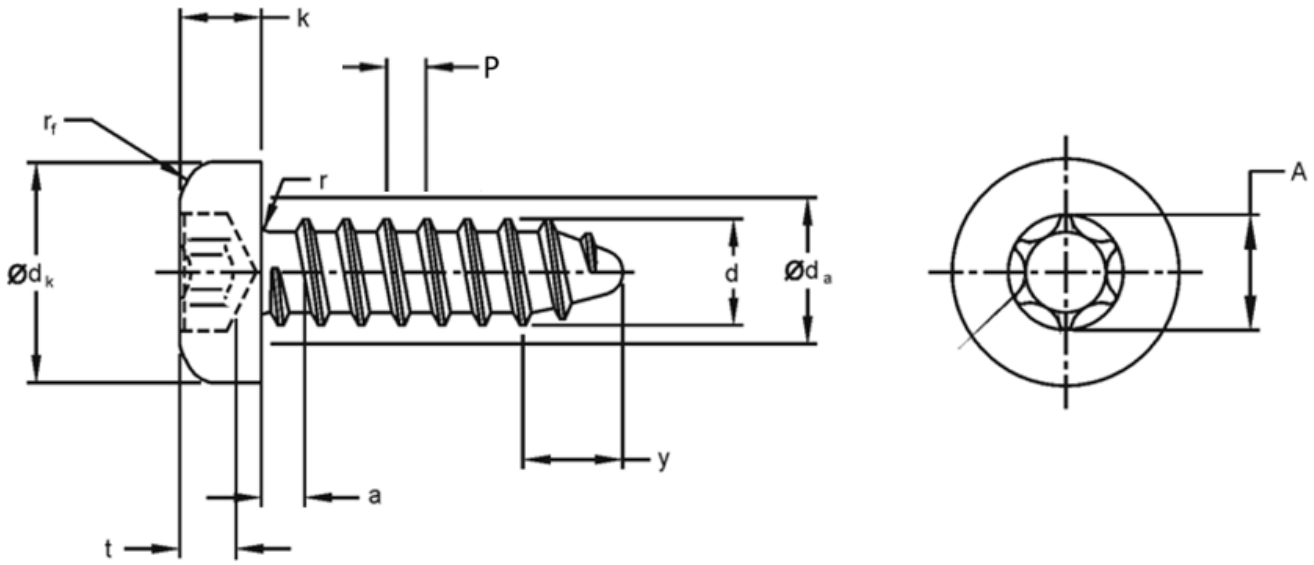

Table 1: Dimensions

Thread	d	ST 4.2	ST 6.3
P	Pitch	1.4	1.8
a Note 1	Maximum	1.4	1.8
d_a	Maximum	4.9	7.3
d_k	Nominal = Maximum	8	12
	Minimum	7.64	11.57
k	Nominal = Maximum	3.1	4.6
	Minimum	2.8	4.3
r	Minimum	0.2	0.25
r_f	-	6.5	10
y Note 2	Reference	3.2	5
Hexalobular Socket	**Number**	**T20**	**T30**
	A reference	3.95	5.6
t	Maximum	1.8	2.42
	Minimum	1.42	2.02

Note 1: Distance from the underside of the head to the first major diameter of the thread within specified limits.
Note 2: Length of incomplete thread.
Note: All dimensions in millimeters (mm).

© Copyright 2016 General Motors Company All Rights Reserved

Documents
Document Sharing Hub
Copyright General Motors Company
Provided by IHS Markit under license with General Motors Company
Reproduction, distribution or publication of these standards is expressly prohib
Licensee=/, User=,
Not for Resale,
Full document details: GMW GMW3266 2016