WORLDWIDE ENGINEERING STANDARDS	General Specification	GMW3293

Hexagon Nut and Washer Assemblies with Plain Washer Product Grade A

1 Introduction

Note: Nothing in this standard supercedes applicable laws and regulations.

Note: In the event of conflict between the English and domestic language, the English language shall take precedence.

1.1 Purpose. This standard gives specifications for hexagon nuts to ISO 4032 with thread diameters from M5 to M8, and plain washer to ISO 7089 non-detachable, turnable.

1.2 Applicability. This nut is applicable for use in a wide variety of automobile applications.

1.3 Remarks. None.

2 References

Note: Only the latest approved standards are applicable unless otherwise specified.

2.1 External Standards/Specifications.

ISO 724	ISO 1502	ISO 4759-3	ISO 7089
ISO 898-2	ISO 4032	ISO 6157-2	ISO/TS 16949
ISO 965-1	ISO 4759-1		

2.2 GM Standards/Specifications.

GMW3059

2.3 Additional References. None.

3 Requirements

3.1 Dimensions. See Figure 1, Figure 2 and Table 1.

Figure 1: Hexagon Nut with Plain Washer

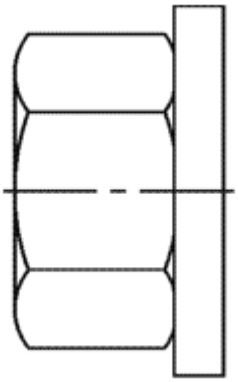

© Copyright 2016 General Motors Company All Rights Reserved

Documents Document Sharing Hub

Copyright General Motors Company
Provided by IHS Markit under license with General Motors Company
Reproduction, distribution or publication of these standards is expressly prohib
Licensee=/, User=,
Not for Resale,
Full document details: GMW GMW3293 2016

Figure 2: Dimension Illustration

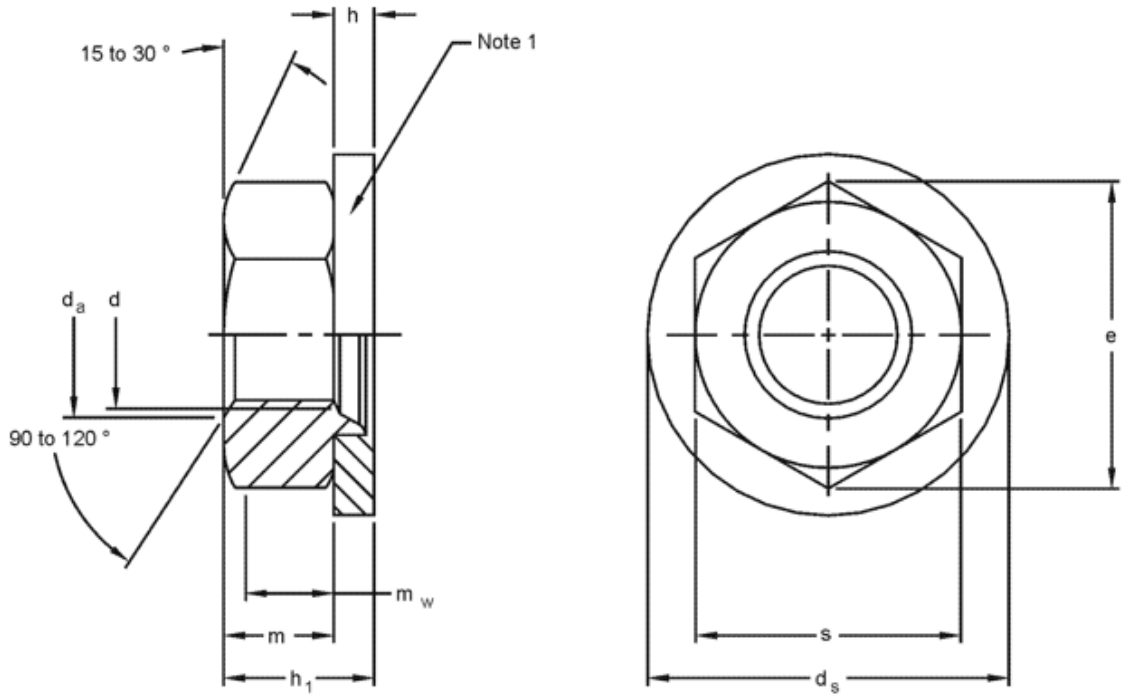

Note 1: Flat washer non-detachable, turnable.

Table 1: Dimensions (in millimeters)

Diameter		M5	M6	M8
	Pitch	0.8	1	1.25
d_a	Maximum	5.75	6.75	8.75
	Minimum	5	6	8
d_s	Maximum	10	12	16
	Minimum	9.64	11.57	15.57
e	Minimum	8.79	11.05	14.38
h		1 ± 0.1	1.6 ± 0.2	1.6 ± 0.2
h_1	≈	5.8	7	8.6
m	Maximum	4.7	5.2	6.8
	Minimum	4.4	4.9	6.44
m_w	Minimum	3.5	3.9	5.2
s	Maximum	8	10	13
	Minimum	7.78	9.78	12.73
Property Class		8	8	8

© Copyright 2016 General Motors Company All Rights Reserved

Documents
Document Sharing Hub
Copyright General Motors Company
Provided by IHS Markit under license with General Motors Company
Reproduction, distribution or publication of these standards is expressly prohib
Licensee=/, User=,
Not for Resale,
Full document details: GMW GMW3293 2016