WORLDWIDE ENGINEERING STANDARDS	General Specification	GMW16331

Identification and Branding Requirements on GM Parts

1 Introduction

Note: Nothing in this standard supercedes applicable laws and regulations.

Note: In the event of conflict between the English and domestic language, the English language shall take precedence.

1.1 Purpose. This standard establishes the global branding and identification requirements for all parts released for use in GM vehicle and propulsion applications and identified by a GM part number (for example: prototype, production and service parts – see paragraph 8.1 for more information). This standard does not include all of the possible identification requirements that are required in the many countries and regions where GM operates but sets a structure for the required branding and identification on the parts. Each region/business unit shall ensure their local requirements are defined and met.

All parts shall be identified as shown in this document. All SORs shall refer to GMW16331.

The parts are divided into the following groups:

1.1.1 Parts to be provided with Basic Identification. All production and service parts shall, at a minimum, be identified with basic GM information as outlined in paragraphs 3 and 5.1 of this document.

1.1.2 Parts which shall be identified according to ISO Guidelines/Recommendations. Parts which shall be identified according to ISO 1043-1, ISO 1043-2, ISO 1043-3 (only in case of health endangerment by plasticizers), ISO 1043-4, ISO 1629, and ISO 11469 guidelines/recommendations. This group includes, e.g. all elastomer and plastic parts as well as all other materials (see paragraph 5.2).

1.1.3 Parts dependent on Country/Region-Specific Type Approval. This group currently includes: Parts in the non-visible area, all lighting facilities (headlamps and rear lamps, flasher lamps, etc.), horns, fanfares and electronic subassemblies (ESA) (see paragraphs 4.0 and 5.3). This shall be in addition to Basic part identification as stipulated in paragraph 1.1.1.

1.1.4 Parts intended for use in vehicles sold in North America. A select group of parts on vehicles intended for use or sale in North America, (regardless of volume) will be required to meet the added ACDelco Branding requirements. These parts and their associated requirements are detailed in Appendix A of this document.

1.1.5 Exceptions. Exceptions shall only be considered if it is technically or economically infeasible to meet these requirements. Deviations to this standard shall be approved jointly by the home room program engineer and regional brand protection department.

Note: For vehicles that at any point in their lifecycle will be available in North America, deviations shall be approved by the Component Branding Review Board as outlined in Appendix A, paragraph A1.2.1.1.

1.1.5.1 Standing Exceptions. Parts which fall under the following categories are the only standing exceptions:

- Fasteners (nuts, bolts, rivets, screws, etc.)
- Radios and speakers
- Telematics and infotainment (navigational systems, entertainment systems, etc.)
- Tires

1.1.5.2 Welded Body Structures. Welded body structures are exempted from the branding requirements.

1.1.5.3 Assemblies. Assemblies are not covered by this standard. However the individual components (identified in the ACT subsystem of GPDS) shall be identified in accordance with this document.

Note: Drawings and math data must include the branding and identification requirements for each engineering-released part contained in such assemblies (see paragraphs 3, 5.1 and 7).

© Copyright 2016 General Motors Company All Rights Reserved

Documents
Document Sharing Hub

Copyright General Motors Company
Provided by IHS Markit under license with General Motors Company
No reproduction or networking permitted without license from IHS
Full document details: GMW-R GMW16331 2016

Licensee=/, User=,
Not for Resale,

1.1.6 Supplier Brands. Supplier brands, names, logos, pictures and texts shall not be used unless permitted or required by law (e.g. EU parts, China emissions-related parts). When used, supplier information cannot be larger than the GM brand or more prominently placed on the installed part (drawing and/or math data should indicate position as well as size of any supplier brands).

1.1.7 Program Codes. It is strictly forbidden to show any program codes on any parts.

1.1.8 Joint Venture (JV) Products. Parts manufactured by a GM JV (e.g. SAIC-GM) that are supplied for global programs shall use the GM branding and identification requirements identified in this standard.

1.1.9 Co-Branding with Other Vehicle Manufacturers (VMs). For common parts used in cooperation projects with other VMs (example: PSA), co-branding (use of both VM brands) shall be used where possible.

1.1.10 Service Parts. Service Part numbers get released through respective GM systems during vehicle/propulsion development process. Drawings and math data for production and final assembly parts must include the branding and identification requirements for all released service parts. Part Identification for service parts released outside of the development process is “as required” and determined by Aftersales Engineering. Branding is always required in accordance with this standard.

1.1.11 Redundancy Reduction for Parts Required to be Labeled According to GMW15862 - Bar Code Content, Format, and Label Requirements for Traceability and Error Proofing (including VER and COM). Information on parts that are labeled according to GMW15862 are exempted from this standard.

1.2 Applicability. For all parts released for use in GM vehicle and propulsion applications.

1.3 Remarks. Not applicable.

2 References

Note: Only the latest approved standards are applicable unless otherwise specified.

2.1 External Standards/Specifications.

DIN 1451-4 [Note 1]	ISO 1043-3	ISO 3098
ISO 1043-1	ISO 1043-4	ISO 8601
ISO 1043-2	ISO 1629	ISO 11469

Note 1: Typefaces – lineal Linear-Antiqua (stenciled lettering for engraving and other processes) is a recognized international standard and is not yet replaced by an ISO.

2.2 GM Standards/Specifications.

GMW3059	GMW14573	GMW15862

2.3 Additional References.

GPS S1102 Guideline for Drawing Creation (available on SharePoint and GM Supply Power)

3 Elements and Requirements of Part Identification

The GM trademark and identification elements shown in this standard shall be permanent and legible throughout the entire service life of the part (considering all environmental, chemical and human influences). Permissible means of applying the trademark and identification to the parts include: Laser etching, engraving, ink jet printing, peening, molding, pressing etc.). Adhesive-based labeling shall only be used when no other means is possible (Labeling must comply with GMW14573). Requirements for scannable information can be met by applying labels in addition to the identification required in this standard. Helvetica light typeface, from the New Helvetica typeface family, shall be used for Vehicle part numbers. If this cannot be used due to tool-technical reasons, typeface DIN 1451-4 is permissible.

For Propulsion part identification typeface ISO 3098-BVL shall be used.

3.1 Basic GM Part Number Element. The part number with the preceding GM trademark (= GM corporate symbol) is always present as the first line in typeface 45 New Helvetica light for Vehicle and in typeface ISO 3098 for Propulsion. Form A of the GM trademark, which should generally be used, is shown in Figure 1. If this cannot be used due to tool-technical reasons, Form B may be used (see Figure 2).

© Copyright 2016 General Motors Company All Rights Reserved

Documents
Document Sharing Hub

Copyright General Motors Company
Provided by IHS Markit under license with General Motors Company
No reproduction or networking permitted without license from IHS
Licensee=/, User=,
Not for Resale,
Full document details: GMW-R GMW16331 2016

Figure 1: GM Trademark Form A

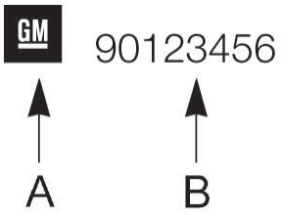

A GM trademark
B GM part number

Figure 2: GM Trademark Form B

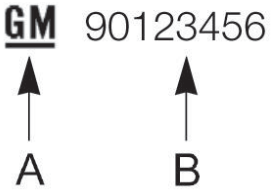

A GM trademark
B GM part number

The possible sizes are listed in Table 5. Size N is preferred.

3.2 Type Approval Symbol and Number. The specifications for the type approval symbol and numbers are specified in various regulations (e.g. EU/ECE, China/CCC, Brasil/INMETRO, etc.).

In special cases, it is demanded that multiple type approval symbols be present simultaneously in the identification. For example: ECE (see Figure 3), EU (see Figure 4), China (see Figure 5) and Brasil (see Figure 6). In this case, it is possible to position the type approval symbols next to one another or below one another.

Figure 3: ECE Symbol

Figure 4: EU Symbol

Figure 5: China Homologation

Figure 6: Brasil INMETRO

© Copyright 2016 General Motors Company All Rights Reserved

Documents
Document Sharing Hub

Copyright General Motors Company
Provided by IHS Markit under license with General Motors Company
No reproduction or networking permitted without license from IHS
Licensee=/, User=,
Not for Resale,
Full document details: GMW-R GMW16331 2016

In the case of lamps and reflex reflectors which are assembled, combined or installed in one another, the legislator permits the depiction of the type approval symbol only once on the joint lamp covering lens. This applies to both rear lamp and front lamp assemblies. The identification for the individual lamps shall then (preferably) be grouped above the type approval symbol.

3.3 Supplier Number. The supplier number "DUNS" (Digital Universal Numbering System) may only be applied unabridged. It is the same size as the part number and set in standard typeface "45 New Helvetica light" for Vehicle and in standard typeface ISO 3098 for Propulsion.

3.4 Supplier's Name or Trademark. The supplier's name or trademark is not permitted unless required by law or internal GM requirements (see paragraph 1.1.6).

When required, the supplier's name shall be set uncoded in standard typeface 45 New Helvetica light for Vehicle; in standard typeface ISO 3098 for Propulsion and the same size as the part number.

The manufacturer's trademark shall not be larger or in a more prominent position than the GM trademark.

3.5 Material Abbreviations. Material abbreviations shall be clearly visible on all polymeric components. The material abbreviations are described in ISO 1629 and ISO 1043. The material abbreviation shall be set in standard typeface 45 New Helvetica light for Vehicle; in standard typeface ISO 3098 for Powertrain and the same size as the part number.

3.6 Manufacturing Date. The manufacturing date indicates the actual date of manufacture and shall be set in standard typeface 45 New Helvetica light for Vehicle; in standard typeface ISO 3098 for Propulsion and the same size as the part number.

3.6.1 Uncoded Manufacturing Dates (used mainly for Vehicle components).

DDD Y

DDD = Day of year (001 to 365)

Y = Last digit of year (0 to 9)

Example: 1235 represents 03 May 2015

WW Y

WW = Week of year (01 to 52)

Y = Last digit of year (0 to 9)

Example: 124 represents week 12 of 2014

M Y

M = Month of year (1 to 9); O = October,
N = November, D = December

Y = Last digit of year (0 to 9)

Example: 47 represents April of 2017

3.6.2 Coded Manufacturing Dates (used mainly for Propulsion components). Manufacturing Date can consist of a designation made up of letters or numbers that give the date in the form of a code. The date marking can also be in the form of a date dial or date field. The space in the marking box as shown in Appendix B is used when date marking is required.

The designation is made up of letters and refers to the type of date marking to be applied (see Table 1).

The letters and/or numbers that represent Year and Month are shown in Tables 2 and 3.

If the date shall be marked in the form of a date dial or date field, as denoted by the designation code, it shall be done in accordance with one of the examples in Figures 7 to 9. In the case explained in Figure 7, the month can be indicated with the arrow or with a punch. The size of the date dial has to be according to Table 4 as indicated by the manufacturing date designation code.

© Copyright 2016 General Motors Company All Rights Reserved

Documents
Document Sharing Hub

Copyright General Motors Company
Provided by IHS Markit under license with General Motors Company
No reproduction or networking permitted without license from IHS
Licensee=/, User=,
Not for Resale,
Full document details: GMW-R GMW16331 2016

Table 1: Designations and Formats of Manufacturing Date Marking

Designation code	Date given as	Date given in	Examples of marking	Explanation of example
TXY	Year	Letters/Numbers	6	2016
TXM	Year Month	Letters/Numbers	6F	June 2016
TXZ	Year Month Day	Letters/Numbers	6F6	06 June 2016
TXW	Year Week	Letters/Numbers	623	week 23 in 2016
TXD	Day Year	Letters/Numbers	1234	day 123 in 2014 means: 02 May 2014
CVM	Year Month	Date dial	See Table 4 and Figure 1	
CXM	Year Month	Date dial	See Table 4 and Figure 1	
FVM	Year Month	Date field	See Table 2	
FXM	Year Month	Date field	See Table 3	

Table 2: Designation of Year according to ISO 3779

Year	Designation
2006	6
2007	7
2008	8
2009	9
2010	A
2011	B
2012	C
2013	D
2014	E
2015	F
2016	G
2017	H
2018	J
2019	K
2020	L

© Copyright 2016 General Motors Company All Rights Reserved

Documents
Document Sharing Hub

Copyright General Motors Company
Provided by IHS Markit under license with General Motors Company
No reproduction or networking permitted without license from IHS
Licensee=/, User=,
Not for Resale,
Full document details: GMW-R GMW16331 2016

Table 3: Designation of Month

Month	Designation
January	A
February	B
March	C
April	D
May	E
June	F
July	G
August	H
September	J
October	K
November	L
December	M

Figure 7: Date Dial (Indicates 2015 September)

Table 4: Permissible Sizes for the Date Dial

Date dial	
Type **CVM**	d = 12 mm
Type **CXM**	d = 20 mm

© Copyright 2016 General Motors Company All Rights Reserved

Documents
Document Sharing Hub

Copyright General Motors Company
Provided by IHS Markit under license with General Motors Company
No reproduction or networking permitted without license from IHS
Licensee=/, User=,
Not for Resale,
Full document details: GMW-R GMW16331 2016

Figure 8: Date Field, Type FVM (Indicates March 2014)

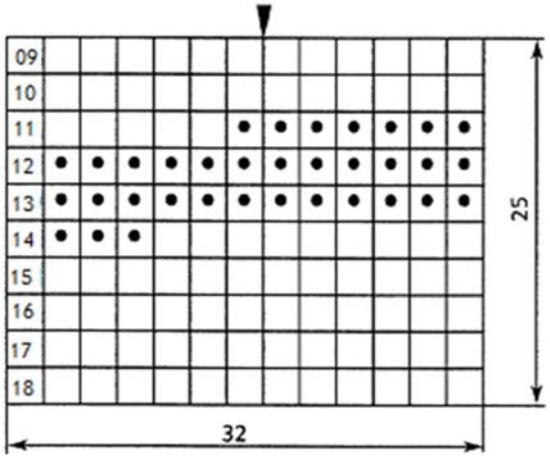

Figure 9: Date Field, Type FXM (Indicates March 2013)

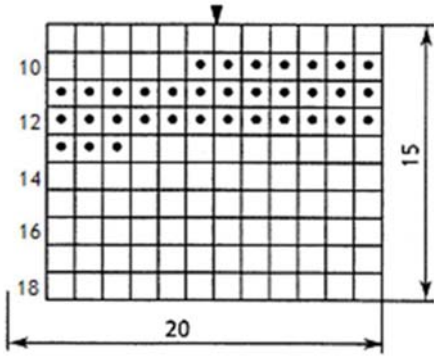

3.7 Serial Number. The serial number can be set in standard typeface 45 New Helvetica light for Vehicle and in standard typeface ISO 3098 for Propulsion, of the same size as the part number.

3.8 Country-specific and/or Manufacturing-specific Requirements. These data are set in standard typeface 45 New Helvetica light for Vehicle and in standard typeface ISO 3098 for Propulsion, of the same size as the part number.

3.9 Additional Data and Deviations. In this case, the responsible component / assembly development departments of GM have a coordinating function.

Additional data and deviations are set in standard typeface 45 New Helvetica light for Vehicle and in standard typeface ISO 3098 for Propulsion, of the same size as the part number.

4 Identification Structure

Figure 10 shows the systematic structure of the identification. The sequence and layout of the data are bindingly specified (enlarged depiction). Changes shall be approved with responsible technical GM department.

© Copyright 2016 General Motors Company All Rights Reserved

Documents
Document Sharing Hub

Copyright General Motors Company
Provided by IHS Markit under license with General Motors Company
No reproduction or networking permitted without license from IHS
Licensee=/, User=,
Not for Resale,
Full document details: GMW-R GMW16331 2016

Figure 10: Identification Structure

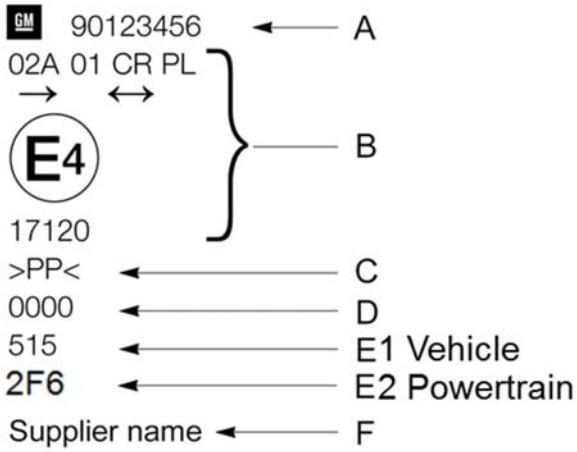

A GM trademark GMW16331-A and part number

B Type approval symbol and number together with other data which are required according to regulations (e.g. EU/ECE)

C Material abbreviations according to ISO 1629 and ISO 1043 recommendations

D Serial number

E1 Manufacturing date uncoded

E2 Manufacturing date coded (FormTXZ)

F Manufacturer's name or symbol

4.1 Exceptions. Country-specific and/or manufacturing-specific requirements and parts codes shall be clarified in accordance with the relevant production requirements in coordination between manufacturers and the relevant GM specialist departments (see paragraph 3.9).

The country specific type (e.g. EU/ECE) approval symbol and number may be dispensed with if the component (e.g. headrest, horn, ESA) is a component of a system and is included in the system type approval.

5 Examples of Part Identification

5.1 Basic Identification 1 (for parts according to paragraph 1.1.1). Figure 11 shows the nominal standard identification with the specified minimum data. The size of the identification text is selected according to paragraph 6 so that the identification can be used for all parts (with the exception of very small parts) and various production procedures.

Figure 11: Basic Identification 1

GM trademark GMW16331-A: Size N

Part number: Upper case height (UCH) 2.6 mm

5.2 Basic Identification 2 (for parts according to paragraph 1.1.2**).** Figure 12 shows the nominal standard identification with additional data for parts which shall be identified in accordance with ISO guidelines/recommendations, i.e. material abbreviations, manufacturer's name and manufacturing date:

© Copyright 2016 General Motors Company All Rights Reserved

Documents
Document Sharing Hub

Copyright General Motors Company
Provided by IHS Markit under license with General Motors Company
No reproduction or networking permitted without license from IHS
Licensee=/, User=,
Not for Resale,
Full document details: GMW-R GMW16331 2016