GM Global Fastening Catalog

1 Introduction

1.1 Scope. This standard provides General Use fastener information contained in a GM Global Fastening Catalog. The GM Global Fastening Catalog contains the approved fasteners and torque for use in GM Global and Regional Vehicle Programs. It does not follow the GM Worldwide template.

1.2 Mission/Theme. Fastener part numbers and torque specifications released for fasteners tightened in the GM vehicle assembly plant must be selected from this catalog, or deviation approved by the system BFO for the attached part. The process for selection of fasteners is described in the catalog in Appendix A.

1.3 Classification. Not applicable.

1.4 Remarks. INFORMATION ON CATALOG PAGE IS FOR REFERENCE ONLY! REFER TO PART DRAWING AS FINAL SOURCE FOR ALL DIMENSIONAL, MATERIAL AND SURFACE TREATMENT SPECIFICATIONS. ALL COPIES OF THE MASTER ARE UNCONTROLLED DOCUMENTS! REFER TO GLOBAL FASTENING RESOURCE CENTER WEBSITE FOR LATEST INFORMATION.

2 Release and Revisions

A new approval must be received for any changes, e.g., properties, manufacturing process, location of manufacture, etc. If not otherwise agreed, all testing and documentation normally required for initial release must be completed.

This standard was originated in August 2012. It was first approved by the Global Fastening Council in November 2012. It was first published in November 2012.

Issue	Publication Date	Description (Organization)
1	NOV 2012	Initial publication.
2	APR 2013	Revision 1. Reference Revision Histories. (Global Fastening Council)
3	DEC 2013	Revision 2. Reference Revision Histories. (Global Fastening Council)
4	JUN 2014	Revision 3. Reference Revision Histories. (Global Fastening Council)
5	MAY 2015	Revision 4. Reference Revision Histories. (Global Fastening Council)
6	NOV 2015	Revision 5. Reference Revision Histories. (Global Fastening Council)
7	MAY 2016	Revision 6. Reference Revision Histories. (Global Fastening Council)
8	FEB 2017	Revision 7: Reverence Revision Histories. (Global Fastening Council)

© Copyright 2017 General Motors Company All Rights Reserved

Documents
Document Sharing Hub

Copyright General Motors Company
Provided by IHS Markit under license with General Motors Company
No reproduction or networking permitted without license from IHS
Full document details: GMW-R GMW17000 2017

Licensee=/, User=,
Not for Resale,

Appendix A

GM Global Fastening Catalog

General Use Fasteners

Date: May 13, 2016

February 2017

Documents
Document Sharing Hub
Copyright General Motors Company
Provided by IHS under license with General Motors Company
No reproduction or networking permitted without license from IHS
Full document details: GMW-R GMW17000 2017
© Copyright 2017 General Motors Company All Rights Reserved
Licensee=, User=,
Not for Resale,

Contacts

For comments, questions, suggestions to this General Motors Global Fastening Catalog please direct them to one of the individuals listed below

APPROVERS

Michelle Wood, Director, Global Fastener Engineering

Approver Name GSSLT Leads	Fastener System	Approver Name BOM Family Owners	Fastener System
Larry Russell	Int/Ext/Closures	Larry Russell	Thread Forming
Dan DeGroote	Chassis	Dan DeGroote	Bolts/Screws
Alexander Deutsch	Body Structure	Keith Olson	Nuts
Shawn Roberts	Electrical	Shawn Roberts	Grounding
Leon Nieto Sanchez	HVAC/PT Cooling	Larry Russell	Body/Welded
David Wulbrecht	Engine	Mike Kardasz	Washers
Chris Preston	Transmission	Benjamin Garcia	Clamps
Robert Gilley	Wheel Fasteners	Dave Brender	Retainers

Regional Approvers	Region
Larry Russell	GMNA
Dan DeGroote	GMNA
Kwanghyun Sung	GMDAT
Scott Gibbins	GM Holden
You Ye	PATAC
Leon Nieto Sanchez	GMM
Rita M. Binda	GMB
Alexander Deutsch	GME

Editor	Region
Frank Richard	GMNA

© Copyright 2017 General Motors Company All Rights Reserved

Documents
Document Sharing Hub
Copyright General Motors Company
Provided by IHS Markit under license with General Motors Company
No reproduction or networking permitted without license from IHS
Licensee=/, User=,
Not for Resale,
Full document details: GMW-R GMW17000 2017

Catalog Format Revision History

Date	Revision	Editor
02/02/2010	Revise catalog approvers page	G. Traister
06/01/2010	Revise Table of contents format, change to WORD 2007.	G. Traister
06/01/2010	Remove all reference to sourced parts due to high maintenance requirements.	G. Traister
09/27/2010	Revise approver's page: replace Sungryul Kim with Kwanghyun Sung, GMDAT.	G. Traister
11/01/2010	Revise catalog to split AS pages to CHASSIS or BODY and re-order pages in alphabetical order under headings.	G. Traister
09/16/2011	Revise approvers. Revise format to separate Application Specific section specifically for Engine/Transmission/Powertrain Integration.	G. Traister
02/06/2012	Add page for Fastening Catalog Page Approval process. Revise wording on 'FORWARD'. Revise Fastener/Torque Approval/Deviation Process page, Revise Fastener Procurement Process page.	D. De Groote
02/06/2012	Revise AS Electrical section page arrangement and title naming.	S Roberts
03/16/2012	Replace Terrance Connolly as Director, Global Fastener Engineering.	G Traister
06/08/2012	Update BOM Family Owner for Clamps to Benjamin Garcia.	D. Rosales Nambo
10/09/2012	Update Transmission GSSLT approver to Chris Preston	Larry Russell
04/15/2013	Add Robert Gilley for Wheel Fasteners	Larry Russell
11/11/2013	Replace Udo Kremer with Alexander Deutsch	Alexander Deutsch
05/01/2014	Replace Mohammad Wazir with Michelle Wood	Larry Russell
6/13/2014	Revise Structure GSSLT Lead to Larry Russell. Revise Larry Russell BFO responsibility to add rivets.	Larry Russell
10/10/2014	Change front page logo	Larry Russell
12/15/2014	Replace Daniel Rosales Nambo with Leon Nieto Sanchez	Benjamin Garcia
10/01/2015	Replaced Glenn Tranister with Frank Richard as Editor	F. Richard
02/6/2017	Replace Lou Meli with Larry Russell as Body/Welded BFO	F. Richard

© Copyright 2017 General Motors Company All Rights Reserved
Copyright General Motors Company
Provided by IHS under license with General Motors Company
No reproduction or networking permitted without license from IHS
Licensee=, User=,
Not for Resale,
Full document details: GMW-R GMW17000 2017
Documents
Document Sharing Hub

GM GLOBAL FASTENING CATALOG
TABLE OF CONTENTS

Click on Entries with page numbers to advance to that page.

Table of Contents

APPENDIX A 2

FOREWORD 7

Controlled Fastener Selection Process 7
GM Global Vehicle Program Fastener/Torque Approval/Deviation Process 8
GM Global Fastener Procurement Process 9
GM Global Fastening Catalog Page Approval Process 10

TORQUE SPECIFICATIONS 11

Standard Dynamic and Static Torque Specifications 11
Torque Angle to Yield Specifications 14
Power Tool Tightening Speed Restriction for Prevailing Torque Fasteners 17

GENERAL USE FASTENERS: 19

BOLTS AND SCREWS: 19

Heavy Hexagon Flange Bolts with M-Point, Full Body, Radius Head (Acorn) 19
Heavy Hexagon Bolts with Flange and M-Point M12, M14, M16 21
Heavy Hexagon Bolts with Flange and Header Point 23
Hex Screw and Washer Assemblies with Flat Washer and M-Point 25
Hex Screw and Washer Assemblies with Conical Washer and M-Point 27
Styled Pan Head Tapping Screw with BR Point 29
M4.2 Hex Washer Head Tapping Screw Assembly with Flat Washer BR Point 31

NUTS: 33

Hexagon Nut, Spring Steel for T5 Studs 33
Hexagon Nuts with Flange 35
Hexagon Nut and Washer Assemblies with Conical Washer 37
Hexagon Nut and Washer Assemblies with Flat Washer 39
Hexagon Flange Nut Assemblies Nylon Insert Prevailing Torque 41
Hexagon Flange Nuts All-Metal Prevailing Torque (AMPT) 43
AMPT Hexagon Nut and Washer Assemblies with Conical Washer 45
AMPT Hexagon Nut and Washer Assemblies with Flat Washer 47
Expansion Nuts – Robotics Style (Multi-Threaded) 49
Expansion Nuts – Box Style (Multi-Threaded) 51
Octagon Self-Pierce-And-Clinch Nuts Type HGL 53
Octagon Self-Pierce-And-Clinch Nuts Type HGL – Aluminum Panel Usage 56
Octagon Self-Pierce-And-Clinch Nuts Type HGL – Stainless Steel Nut 59
Pierce Nuts - Rectangular Type AHS 62
Round Self-Pierce-And-Clinch Nuts, Type MHD 64
Self-Pierce-And-Clinch Nuts, Type MHN 66
Round Flangeform Clinch Nuts 68
Square Self-Pierce-And-Clinch, Type KP S/H 70
U Nuts - Multi-Thread 71
Weld Nut - Hex Flange 3 Projection 74
Weld Nut - Unthreaded 3-Projection 76
Weld Nut Plate - Aluminum 78

PANEL CLIPS: 80

© Copyright 2017 General Motors Company All Rights Reserved
Copyright General Motors Company
Provided by IHS under license with General Motors Company
No reproduction or networking permitted without license from IHS
Full document details: GMW-R GMW17000 2017
Licensee=, User=,
Not for Resale,
Documents Document Sharing Hub

TRIM: 80
Metal W - Base Type *80*
PUSH-PIN: **82**
Push-Pin (Non-Shouldered Ergonomic) *82*
RETAINERS: **84**
Retainer *84*
TIE STRAPS: **86**
Tie Straps *86*
Tie Strap for Panel Mount *88*
Tie Strap for Weld Stud Mounting *90*
STUDS: **92**
WELD STUDS: 92
ALUMINUM Drawn Arc Weld Stud with Fir Tree Thread *92*
Drawn Arc Weld Studs with Fir Tree Thread *94*
Large Flange Drawn Arc Weld Stud with M Point *96*
Projection Weld Studs with M Point *98*
CLINCH STUD: 100
Flangeform Studs with M Point *100*
DOUBLE ENDED STUDS: 103
Double Ended Stud with Heavy Hex Flange Head *103*
Double Ended Stud with Heavy Hex Flange Head and Washer *106*

© Copyright 2017 General Motors Company All Rights Reserved
Copyright General Motors Company
Provided by IHS under license with General Motors Company
No reproduction or networking permitted without license from IHS
Licensee=, User=,
Not for Resale,
Full document details: GMW-R GMW17000 2017
Documents
Document Sharing Hub

FOREWORD

This GM Global Fastening Catalog (GMGFC) contains the approved fasteners and torque for use in GM Global and Regional Vehicle Programs. Fastener part numbers and torque specifications released for fasteners tightened in the GM vehicle assembly plant must be selected from this catalog, or deviation approved by the BFO for the attached part. The authority and details for this decision are documented in Notice of Action (NOA) **GFC-452**. The process for selection of fasteners is described below.

Controlled Fastener Selection Process

1. For fasteners installed in the GM vehicle assembly plant or Value Added Assembler (VAA) plant, including fasteners that are part of assembly (POA), fastener parts and torque specifications shall be selected from the GM Global Fastening Catalog.

2. Requests for changes to the GMGFC must be addressed to the GM Fastening Engineering Department at the requestor's location.

3. The Responsible Engineer must consult with the Fastening Engineering Group at his location prior to requesting approval for a part not included in the GMGFC. Ref. flow chart 'GM Global Vehicle Program Fastener Approval Process'.

4. Use of Fasteners and Torque not included in the GMGFC must follow the Fastener Deviation Process. Ref. flow chart 'Deviation Process'.

5. New Fastener Part Numbers must be approved by Fastening Engineering.

6. Uni-Graphics Math Models are available for all fasteners included in the GMGFC. The Math Model and drawing for new fastener part numbers will be generated per Common Global Release Process, found on 'Global Fastening Resource Center' WEB Site.

7. Fasteners for test and experimental builds will be procured per the local process at the requestor's location. In the event fasteners from the GMGFC are not available, Fastening Engineering may identify suitable replacement fastener which shall be used until the GMGFC fastener is available. Ref. flow chart 'Fastener Procurement Process.'

8. Details regarding exceptions for release of catalog fasteners for Global and Regional Vehicle Programs are included in the Reference NOA **GFC-452**.

© Copyright 2017 General Motors Company All Rights Reserved
Copyright General Motors Company
Provided by IHS under license with General Motors Company
No reproduction or networking permitted without license from IHS
Licensee=, User=,
Not for Resale,
Documents Document Sharing Hub
Full document details: GMW-R GMW17000 2017

GM Global Vehicle Program Fastener/Torque Approval/Deviation Process

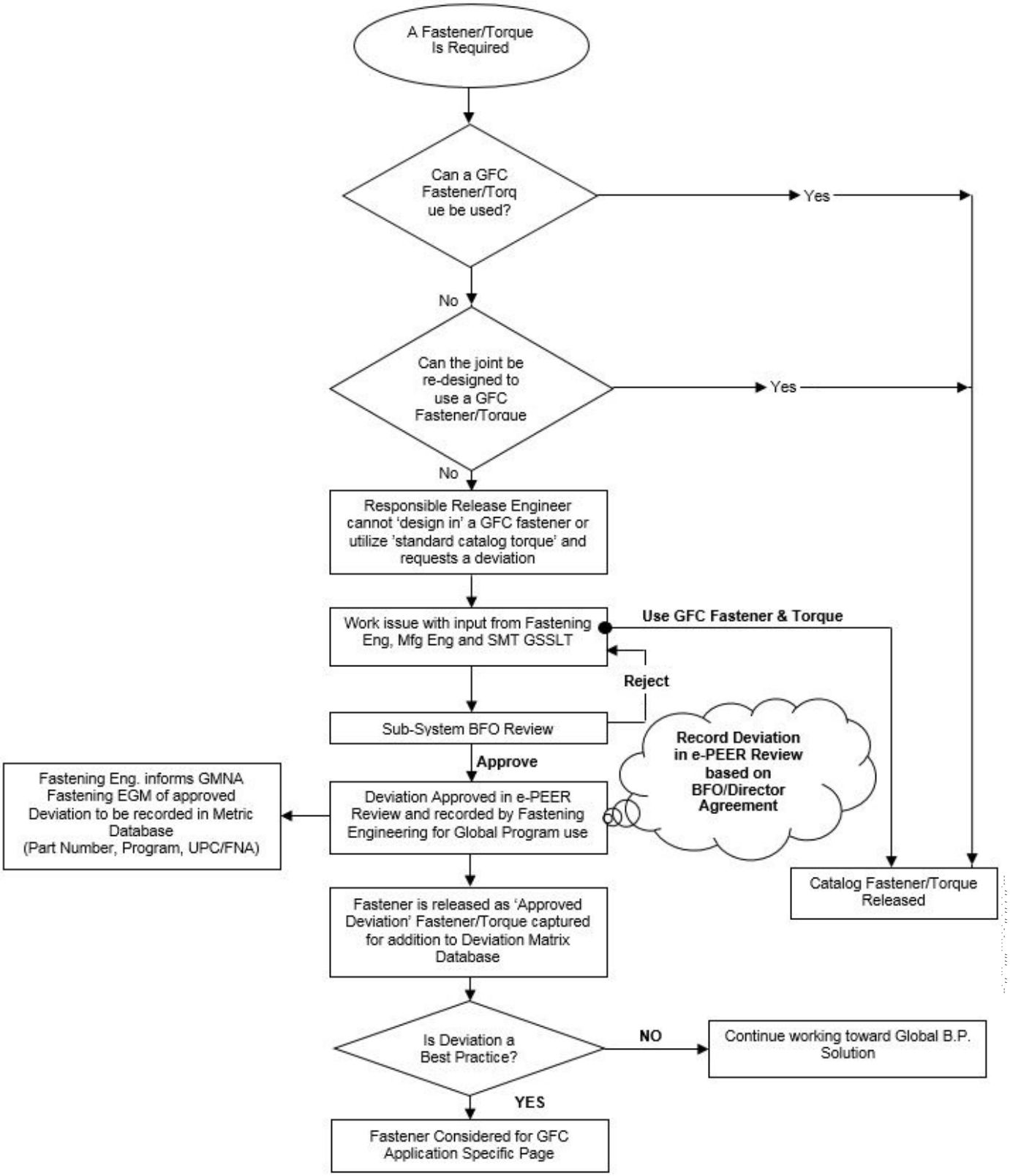

© Copyright 2017 General Motors Company All Rights Reserved
Copyright General Motors Company
Provided by IHS under license with General Motors Company
No reproduction or networking permitted without license from IHS
Licensee=, User=, Not for Resale,
Full document details: GMW-R GMW17000 2017
Documents Document Sharing Hub

GM Global Fastener Procurement Process

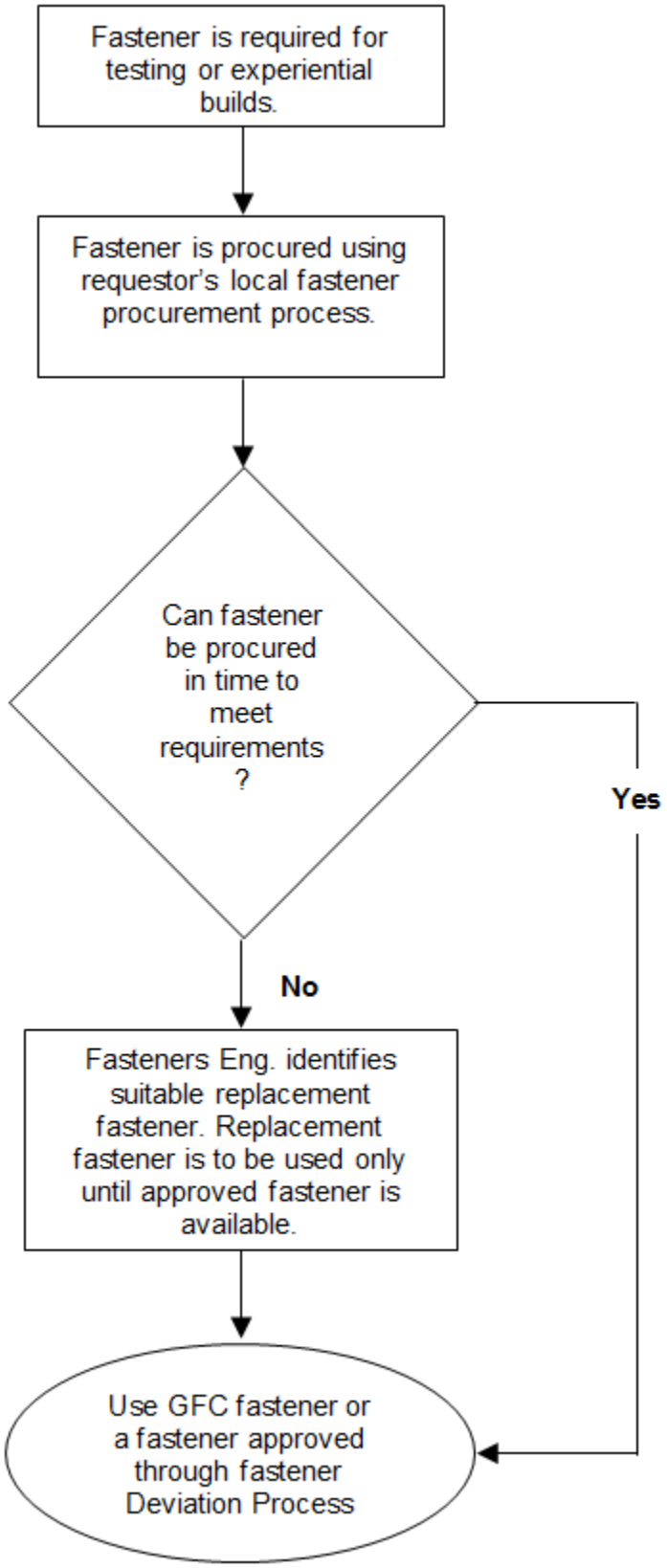

© Copyright 2017 General Motors Company All Rights Reserved
Copyright General Motors Company
Provided by IHS under license with General Motors Company
No reproduction or networking permitted without license from IHS
Full document details: GMW-R GMW17000 2017
Licensee=, User=,
Not for Resale,
Documents
Document Sharing Hub

GM Global Fastening Catalog Page Approval Process

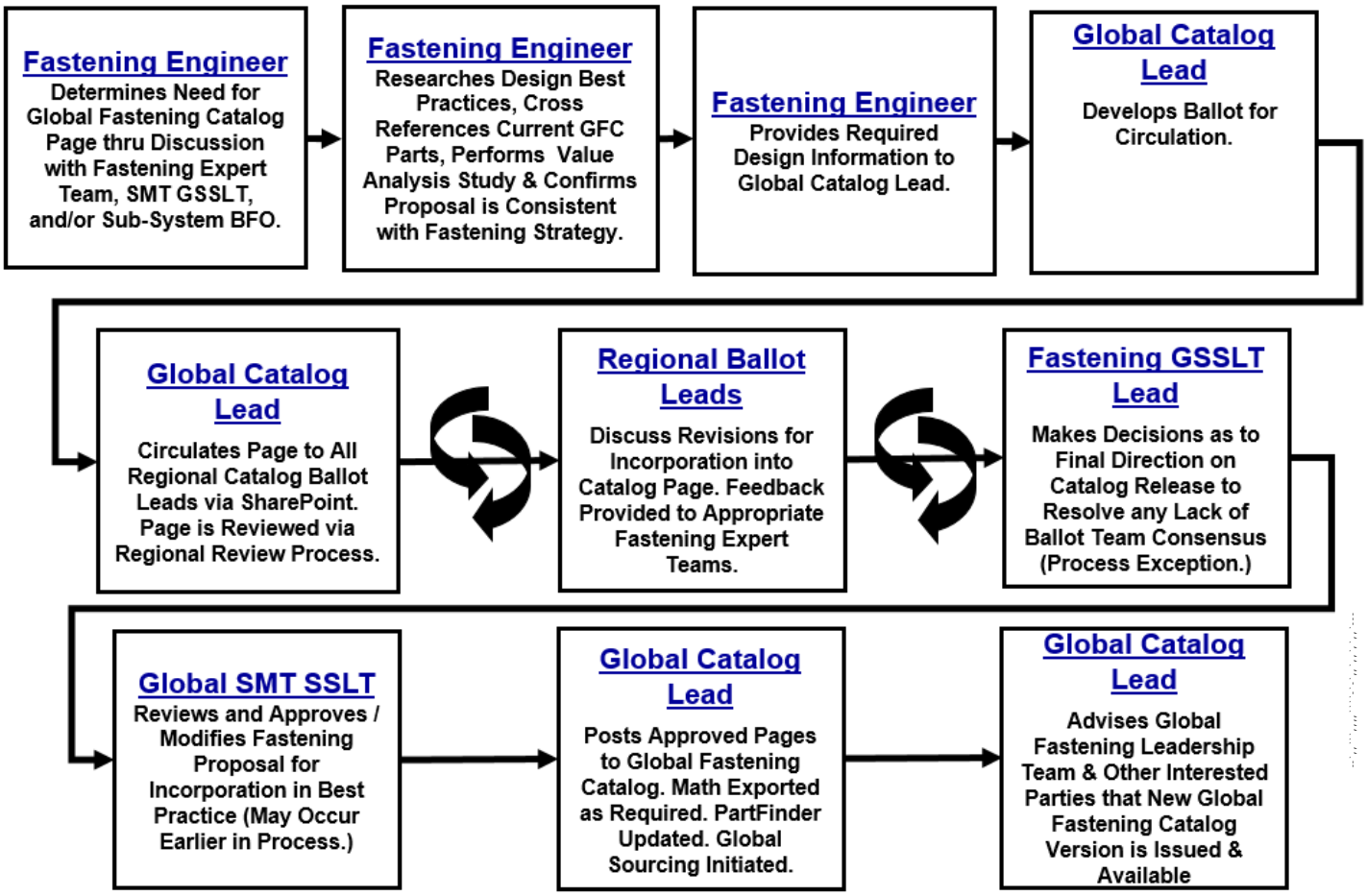

© Copyright 2017 General Motors Company All Rights Reserved
Copyright General Motors Company
Provided by IHS under license with General Motors Company
No reproduction or networking permitted without license from IHS
Full document details: GMW-R GMW17000 2017
Licensee=, User=,
Not for Resale,
Documents
Document Sharing Hub

TORQUE SPECIFICATIONS

Standard Dynamic and Static Torque Specifications

NOTES

- The following global standard torque specifications shall be released for all threaded fasteners in the GM Global Fastening Catalog unless otherwise noted on the catalog page.
- The format for release of the torque specification shall be according to GRC 3.1.10.
- These torques do not apply to nuts with GM14100 (or predecessors) plus wax/lubricant *SEE FASTENING ENGINEERING*
- In some instances, a Standard Dynamic Torque will not meet the joint requirements, and will be flagged in E2 as a Non-compliant Torque. In these cases, please add a note on the E2 Notes tab detailing the reason for the special case torque

Nominal Diameter (mm)	Minimum Bolt Material Grade GMW25	Standard Dynamic Torque (Nm)	(4) Standard Static Torque (Nm)
4.2	ISO2702	(1) D2.5+/-0.5NM	(3) 1NMMIN FDSNS
5	8.8	D4.7+/-0.9NM	3NMMIN FDSNS
6	8.8	D9+/-1.5NM	(2) S7.5-10.5NM
8	8.8	D22+/-3NM	S19-25NM
10	10.9	D58+/-9NM	S49-67NM
12	10.9	D100+/-15NM	S85-115NM
14	10.9	D160+/-25NM	S135-185NM
16	10.9	D240+/-35NM	S205-275NM

(1) D – Dynamic
(2) S – Static
(3) FDSNS – Fully Driven Seated Not Stripped
(4) The static torque specification listed is for initial release only. The static torque may be revised by the General Assembly Engineer per Global NOA GGAS345 and GPDS Releasing Guideline GRC 3.1.10.

*Exceptions for grade 8.8 bolts and studs

Nominal Diameter (mm)	Minimum Bolt Material Grade GMW25	Standard Dynamic Torque (Nm)	(4) Standard Static Torque (Nm)
10	***8.8***	(1) D41+/-6NM	S35-47NM
12	***8.8***	(1) D70+/-11NM	S59-81NM

1. Standard torque specification only for nuts installed onto grade 8.8 bolt or stud, or for grade 8.8 bolt

© Copyright 2017 General Motors Company All Rights Reserved
Copyright General Motors Company
Provided by IHS under license with General Motors Company
No reproduction or networking permitted without license from IHS
Full document details: GMW-R GMW17000 2017
Licensee=, User=, Not for Resale,
Documents Document Sharing Hub

Conditions

- Bolt material is at a minimum according to the table above.
- Contact areas and component materials must be designed so allowable bearing stress and compressive yield strength of the clamped materials is not exceeded.
- The component against which the driven fastener is assembled **cannot** have a wax coating or friction less than 0.10.
- Thread engagement into tapped components must be sufficient to prevent stripping.

© Copyright 2017 General Motors Company All Rights Reserved
Copyright General Motors Company
Provided by IHS under license with General Motors Company
No reproduction or networking permitted without license from IHS
Licensee=, User=,
Not for Resale,
Documents
Document Sharing Hub
Full document details: GMW-R GMW17000 2017

REVISION HISTORY

01/18/2008	Initial Release to Global Catalog	Barry Narrin
04/29/2009	Pages updated and release to Global Catalog	Barry Narrin
10/20/2011	Revise notes on Standard Torque page to eliminate wax case. Delete torque and conditions page for Prevailing Torque Nuts. Correct NOA numbers.	John Reiff
02/06/2012	Add note	Dan DeGroote
08/30/2013	Added torque specifications for M10 and M12 grade 8.8	John Reiff
06/02/2014	Added joint requirements note	Dan DeGroote
02/07/2017	Update format	F. Richard

© Copyright 2017 General Motors Company All Rights Reserved
Copyright General Motors Company
Provided by IHS under license with General Motors Company
No reproduction or networking permitted without license from IHS
Licensee=, User=,
Not for Resale,
Documents
Document Sharing Hub
Full document details: GMW-R GMW17000 2017

Torque Angle to Yield Specifications

Standard Torque Angle to Yield (TAY) Specifications

NOTES

- Use the standard torque specifications as the first choice. Release of TAY specification must be approved by the appropriate GSSLT and Fastening Engineer for that usage. For suspension refer to KPAC FASTCPT-134.
- For a Torque plus Angle specification, the Design Responsible Engineer must contact the responsible Fastening Engineer.
- The Fastening Engineer shall provide the Design Responsible Engineer with the Torque plus Angle specification, the static torque specification, the maximum expected final torque, the requirements for reprocessing or repair in the assembly plant, and the requirements for service.
- TAY specification must be released according to GRC 3.1.10. Replacement of the bolt in service and in the event of plant reprocessing is required.
- PQC "TAY" must be released.

Nominal Diameter (mm)	Bolt Material Grade GMW25	Standard TAY	Static Torque
10	10.9	D58NM+90TO105DEG	TBD by Fastening Engineer
12	10.9	D100NM+90TO105DEG	TBD by Fastening Engineer
14	10.9	D160NM+90TO105DEG	TBD by Fastening Engineer
16	10.9	D240NM+90TO105DEG	TBD by Fastening Engineer

Conditions

To ensure that the bolt or nut can be assembled to the standard torque angle to yield specification without failure, the following Best Practices must be followed:

- Bolt material is according to the table above.
- Contact areas and component materials must be designed so allowable bearing stress and compressive yield strength of the clamped materials is not exceeded. Reference Best Practice: "Maintaining Fastening Clamp Load Embedment Issues", GMW15011, and GMW14676.
- Thread engagement for tapped threads, or nut proof load, must be sufficient to withstand the maximum preload resulting from the TAY specification.
- The yielding section of the bolt must be greater than 2.5xd (see picture). The yielding section is the length of thread inside the grip length or the length of the bolt shank which is reduced below the bolt tensile stress diameter.
- The component against which the driven fastener is assembled **cannot** have a wax coating or lubricant with coefficient of friction less than 0.10.
- The nut and bolt finish coefficient of friction is 0.10 – 0.16.

© Copyright 2017 General Motors Company All Rights Reserved
Copyright General Motors Company
Provided by IHS under license with General Motors Company
No reproduction or networking permitted without license from IHS
Licensee=, User=,
Not for Resale,
Documents Document Sharing Hub
Full document details: GMW-R GMW17000 2017

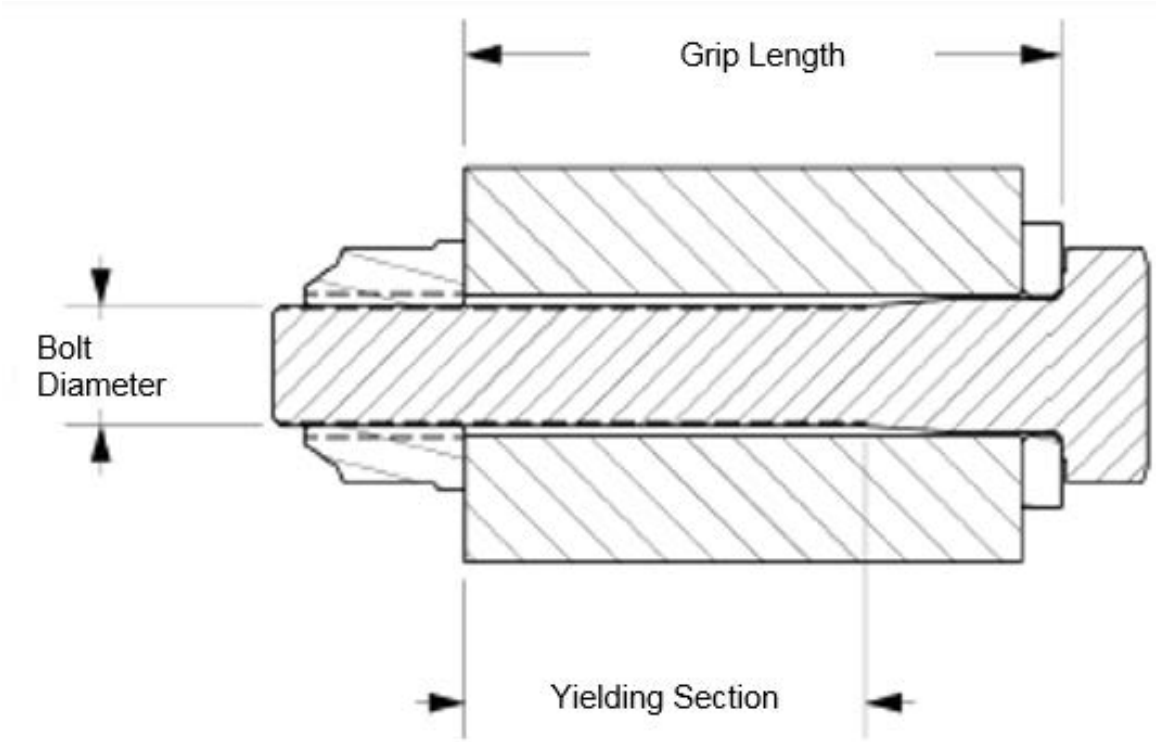

© Copyright 2017 General Motors Company All Rights Reserved
Copyright General Motors Company
Provided by IHS under license with General Motors Company
No reproduction or networking permitted without license from IHS
Licensee=, User=,
Not for Resale,
Documents
Document Sharing Hub
Full document details: GMW-R GMW17000 2017

REVISION HISTORY

08/30/2013	Initial Release to Global Catalog	John Reiff
02/07/2017	Update Reference Document to FASTCPT-134 in Notes	F. Richard
02/07/2017	Update format	F. Richard

© Copyright 2017 General Motors Company All Rights Reserved
Page 16 of 107
Copyright General Motors Company
Provided by IHS under license with General Motors Company
No reproduction or networking permitted without license from IHS
Licensee=, User=,
Not for Resale,
Documents
Document Sharing Hub
Full document details: GMW-R GMW17000 2017

Power Tool Tightening Speed Restriction for Prevailing Torque Fasteners

For assembly of prevailing torque fasteners or into prevailing torque fasteners power tool speed must be restricted as follows:

Fastener Type	Power Tool Maximum Speed (RPM)
Thread forming bolts into unthreaded metal nut members	500
Bolt with nylon patch or nut with nylon insert	350
Screws into plastic or plastic nuts driven on studs	350
All metal prevailing torque nut and 65% Lock Thread (M6 - M10)	350
All metal prevailing torque nut and 65% Lock Thread (≥M12)	225

Conditions for which Fastener Engineer/Design Release Engineer should consider further reduction in tool speed:

1. Material is not per global standards. Example M12 prevailing torque nut installed to bolt or stud that is not material GMW25 (10.9)
2. More than 6 full threads extend from nut after tightening.

© Copyright 2017 General Motors Company All Rights Reserved
Copyright General Motors Company
Provided by IHS under license with General Motors Company
No reproduction or networking permitted without license from IHS
Licensee=, User=,
Not for Resale,
Documents Document Sharing Hub
Full document details: GMW-R GMW17000 2017

REVISION HISTORY

06/13/2008	Initial Release to Global Catalog	Barry Narrin
10/09/2012	Complete revision of conditions and tool speeds.	John Reiff
7/8/2015	For 225 RPM changed from (M12-M16) to (≥M12)	F. Richard
02/07/2017	Update format	F. Richard

© Copyright 2017 General Motors Company All Rights Reserved
Copyright General Motors Company
Provided by IHS under license with General Motors Company
No reproduction or networking permitted without license from IHS
Licensee=, User=,
Not for Resale,
Documents
Document Sharing Hub
Full document details: GMW-R GMW17000 2017

GENERAL USE FASTENERS:
BOLTS AND SCREWS:
Heavy Hexagon Flange Bolts with M-Point, Full Body, Radius Head (Acorn)

Material:
GMW25 (8.8 ≤ M8, 10.9 ≥ M10)

Surface Treatment:
GMW3359 (Silver)

NOTES
- Parts above the continuous red thick stepped line are threaded to the head. For M6, M8, and M10 Applications use Heavy Hexagon Flange Bolts with M-Point, Full Body, Radius Head (Acorn).
- For additional data see GM specification GMW16458 and GMW3362.

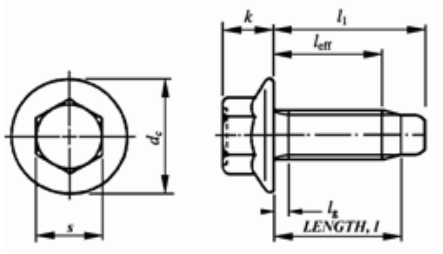

Thread		M6					M8					M10				
P		1.0					1.25					1.5				
s	Hex	10					13					15				
k	max	6.6					8.1					10.4				
d_c	max	14.2					18					22.3				
l		l	l_1	l_{eff}	l_g	Part	l	l_1	l_{eff}	l_g	Part	l	l_1	l_{eff}	l_g	Part
(ref)		nom	max	min	max	Number	nom	max	min	max	Number	nom	max	min	max	Number
10		7.65	10.65	5.2	1.5	11588709										
13		10.65	13.65	8.2	1.5	11588710										
16		13.65	16.65	11.2	1.5	11588711										
20		17.65	20.65	15.2	1.5	11588712	16.65	20.70	13.7	1.9	11588722	15.85	20.65	12.3	2.2	11588736
25		22.65	25.65	20.2	2.5	11588713	21.65	25.70	18.7	1.9	11588723	20.85	25.65	17.3	2.2	11588737
30		27.65	30.65	25.2	2.5	11588714	26.65	30.70	23.7	3.1	11588724	25.85	30.65	22.3	2.2	11588738
35		32.65	35.65	30.2	12.5	11588715	31.65	35.70	28.7	3.1	11588725	30.85	35.65	27.3	3.8	11588739
40		37.65	40.65	35.2	17.5	11588716	36.65	40.70	33.7	12.0	11588726	35.85	40.65	32.3	3.8	11588740
45		42.65	45.65	40.2	22.5	11588717	41.65	45.70	38.7	17.0	11588727	40.85	45.65	37.3	11.5	11588741
50		47.65	50.65	45.2	27.5	11588718	46.65	50.70	43.7	22.0	11588728	45.85	50.65	42.3	16.5	11588742
55		52.65	55.75	50.1	32.5	11609577	51.65	55.80	48.6	27.0	11588729	50.85	55.75	47.2	21.5	11588743
60		57.65	60.75	55.1	37.5	11588719	56.65	60.80	53.6	32.0	11588730	55.85	60.75	52.2	26.5	11588744
65		62.65	65.75	60.1	32.5	11611329	61.65	65.80	58.6	37.0	11588731	60.85	65.75	57.2	31.5	11588745
70		67.65	70.75	65.1	47.5	11588720	66.65	70.80	63.6	42.0	11588732	65.85	70.75	62.2	36.5	11588746
75		72.65	75.75	70.1	42.5	11611330	71.65	75.80	68.6	45.0	11610448	70.85	75.75	67.2	41.5	11588747
80		77.65	80.75	75.1	57.5	11588721	76.65	80.80	73.6	52.0	11588733	75.85	80.75	72.2	46.5	11588748
85		82.65	85.75	80.1	52.5	11611354	80.0	84.15	77.0	52.0	11589321	80.85	85.75	77.2	51.5	11588749
90		87.65	90.75	85.1	67.5	11610243	86.65	90.80	83.6	62.0	11588734	85.85	90.75	82.2	56.5	11588750
95		91.85	94.95	89.3	62.6	11571216	91.65	95.80	88.6	67.0	11611102	90.85	95.75	87.2	61.5	11588751
100							96.65	100.80	93.6	72.0	11588735	95.85	100.75	92.2	66.5	11588752
105							100.85	105.00	97.8	76.2	11589253	100.85	105.75	97.2	71.5	11588753
110		107.65	110.75	105.1	87.5	11562025	105.00	109.15	101.9	83.0	11519398	105.85	110.75	102.2	76.5	11588754
115		112.65	115.75	110.1	87.0	11611967	111.65	115.80	108.6	87.0	11612204	110.85	115.75	107.2	81.5	11588755
120							116.65	120.80	113.6	92.0	11588694	115.85	120.75	112.2	86.5	11588756
125							122.65	126.80	119.6	98.0	11589134	120.85	125.75	117.2	91.5	11588757

ATTENTION: Refer to Paragraph 1.4 on page 1.

© Copyright 2017 General Motors Company All Rights Reserved
Copyright General Motors Company
Provided by IHS under license with General Motors Company
No reproduction or networking permitted without license from IHS
Licensee=, User=,
Not for Resale,
Documents Document Sharing Hub
Full document details: GMW-R GMW17000 2017

REVISION HISTORY

03/19/2005	Initial Publication	D. Wulbrecht
07/21/2007	Graphic Picture updated	Barry Narrin
01/15/2011	Added part number 11519398	Dan DeGroote
04/29/2011	Added part number 11589253	Dan DeGroote
09/16/2011	Added part number 11611967	Dan DeGroote
03/16/2012	Added part numbers 11610448, 11611329, 11611330, 11611354 11610243, 11571216, 11562025, 11589134, 11612204, 11611102 11589321	Dan DeGroote
11/11/2012	Add note to reference GM specifications .	Dan DeGroote
02/07/2017	Correct l1 dimensions	Dan DeGroote
02/07/2017	Update format	F. Richard

© Copyright 2017 General Motors Company All Rights Reserved
Copyright General Motors Company
Provided by IHS under license with General Motors Company
No reproduction or networking permitted without license from IHS
Licensee=, User=,
Not for Resale,
Documents
Document Sharing Hub
Full document details: GMW-R GMW17000 2017

Heavy Hexagon Bolts with Flange and M-Point M12, M14, M16

Material:
GMW25 (10.9)

Surface Treatment:
GMW3359 (Silver)

NOTES
- Parts above the continuous red thick stepped line are threaded to the head. For M12, M14, and M16 Applications Use Heavy Hexagon Bolts with Flange and M-Point.
- For additional data see GM specification GMW16458 and GMW3362.

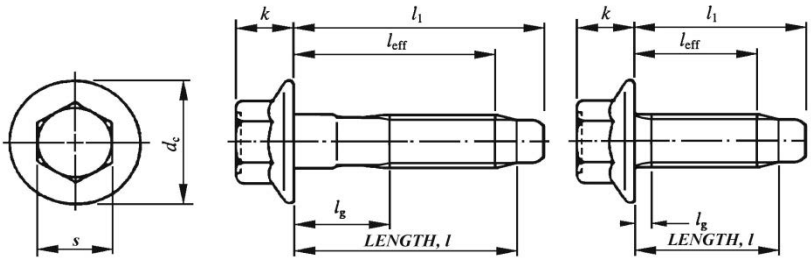

Thread		M12				M14				M16			
P	Pitch	1.75				2				2			
s	Hex	18				21				24			
k	max	11.8				13.7				15.4			
d_c	max	26.6				30.5				35			
L		l_1	l_{eff}	l_g	Part	l_1	l_{eff}	l_g	Part	l_1	l_{eff}	l_g	Part
nom		max	min	max	Number	max	min	max	Number	max	min	max	Number
25		30.8	20.85	2.6	11589271								
30		35.8	25.85	4.4	11589272	36.58	25.35	3	11589350				
35		40.8	30.85	4.4	11589273	41.58	30.35	5	11589351	42.25	30.35	3	11589365
40		45.8	35.85	4.4	11589274	46.58	35.35	5	11589352	47.25	35.35	5	11589366
45		50.8	40.85	4.4	11589275	51.58	40.35	5	11589353	52.25	40.35	5	11589367
50		55.8	45.85	4.4	11589276	56.58	45.35	5	11589354	57.25	45.35	5	11589368
55		60.9	50.75	4.4	11609605	61.68	50.25	5	11561296	62.25	50.25	5	11609231
60		65.9	55.75	4.4	11589277	66.68	55.25	5	11589355	67.35	55.25	5	11589369
65		70.9	60.75	4.4	11609606	71.68	60.25	5	11561297	72.35	60.25	5	11561425
70		75.9	65.75	21	11589278	76.68	65.25	5	11589356	77.35	65.25	5	11589370
75		80.9	70.75	26	11609598	81.68	70.25	5	11561298	82.35	70.25	5	11561305
80		85.9	75.75	31	11589279	86.68	75.25	27	11589357	87.35	75.25	5	11589371
85		90.9	80.75	36	11609607	91.68	80.25	32	11561299	92.35	80.25	5	11561306
90		95.9	85.75	41	11589280	96.68	85.25	37	11589358	97.35	85.25	33	11589372
95		100.9	90.75	46	11609608	101.68	90.25	42	11561300	102.35	90.25	38	11561307
100		105.9	95.75	51	11589281	106.68	95.25	47	11589359	107.35	95.25	43	11589373
105		110.9	100.75	56	11609609	111.68	100.25	52	11561301	112.35	100.25	48	11561308
110		115.9	105.75	61	11589282	116.68	105.25	57	11589360	117.35	105.25	53	11589374
115		120.9	110.75	66	11609610	121.68	110.25	62	11561302	122.35	110.25	58	11561309
120		125.9	115.75	71	11589283	126.68	115.25	67	11589361	127.35	115.25	63	11589375
125		130.9	120.75	76	11609611	131.68	120.25	72	11561303	132.35	120.25	68	11561310
130		135.9	125.75	81	11589284	136.68	125.25	77	11589362	137.35	125.25	73	11589376
135		140.9	130.75	86	11609612	141.68	130.25	82	11561304	142.35	130.25	78	11561311
140		145.9	135.75	91	11589285	146.68	135.25	87	11589363	147.35	135.25	83	11589377
145						151.68	140.25	105	13258478				
150		155.9	145.75	71	11547261	156.68	145.25	97	11589364	157.35	145.25	93	11589378
155		160.9	150.75	120	11518690								
160		165.9	155.75	91	11546386					167.35	155.25	103	11589379

© Copyright 2017 General Motors Company All Rights Reserved
Copyright General Motors Company
Provided by IHS under license with General Motors Company
No reproduction or networking permitted without license from IHS
Full document details: GMW-R GMW17000 2017
Licensee=, User=,
Not for Resale,
Documents Document Sharing Hub

REVISION HISTORY

06/28/2002	M10 Hex Size Changed to 15. New 11588… part numbers replaced 11900… series. References to Global Catalog Removed.	Ron Strong
08/13/2003	Increased thread length, revised prints per GM spec. B115, issued new 11589 part #s.	K. Esfahani
06/20/2004	Added 11609…and 1156…. part numbers with 5 mm length increment	K. Esfahani
03/19/2005	Sizes M6, M8, and M10 replaced by Heavy Hexagon with Flange Acorn Head Bolts	K. Esfahani
03/16/2012	Added part number 13258478	Mike Kardasz
12/07/2012	Added part numbers 11518690, 11546386. Revised note from B115 To GMW16458	Dan DeGroote
04/15/2013	Add bolt part number 11547261	Keith Olson
02/07/2017	Update format	F. Richard

© Copyright 2017 General Motors Company All Rights Reserved
Copyright General Motors Company
Provided by IHS under license with General Motors Company
No reproduction or networking permitted without license from IHS
Licensee=, User=,
Not for Resale,
Documents
Document Sharing Hub
Full document details: GMW-R GMW17000 2017

Heavy Hexagon Bolts with Flange and Header Point

Material:
GMW25 (10.9)

Surface Treatment:
GMW3359 (Silver)

NOTES

- **Header point bolts are intended for use in hand starting applications only.**
- Parts above the continuous red thick stepped line are threaded to the head.
- Reduced shank type only below the dashed line. If no dashed line on a diameter, parts below red line are also reduced shank.
- See Fastening Engineer for guidance in applications.
- Optimized for Mass savings

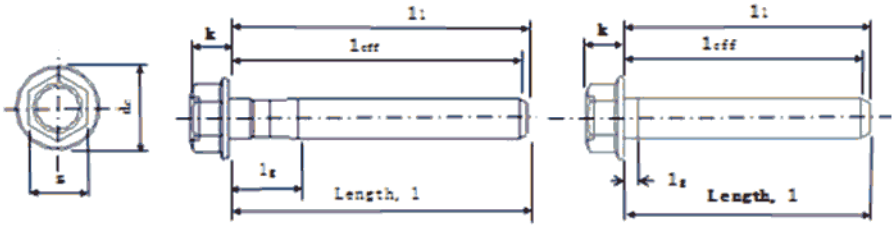

Thread	M10				M12				M14				M16			
P Pitch	1.5				1.75				2				2			
S Hex	15				18				21				24			
K max	10.4				11.8				13.7				15.4			
d_c max	22.3				26.6				30.5				35			
l	l_1	l_{eff}	l_g	Part	l_1	l_{eff}	l_g	Part	l_1	l_{eff}	l_g	Part	l_1	l_{eff}	l_g	Part
nom	max	min	max	Number	max	min	max	Number	max	min	max	Number	max	min	max	Number
16	16.4	13.35	2.2	11546399												
20	20.4	17.35	2.2	11546400												
25	25.4	22.35	3.8	11516327	25.4	22.18	4.4	11516329								
30	30.4	27.35	3.8	11516328	30.4	26.98	4.4	11515775	30.4	25.6	3	11610876				
35	35.5	32.25	3.8	11515767	35.8	31.58	4.4	11515776	35.8	30.2	5	11610877	35.8	30.2	3	11611019
40	40.8	37.25	3.8	11546404	40.8	36.58	4.4	11516330	40.8	35.2	5	11610878	40.8	35.2	5	11611020
45	45.8	42.25	3.8	11546405	45.8	40.7	4.4	11610904	45.8	40.2	5	11610879	45.8	40.2	5	11611021
50	50.8	47.25	3.8	11546406	50.8	45.7	4.4	11610905	50.8	45.2	5	11610880	50.8	45.2	5	11611022
55	56.0	52.15	3.8	11546407	56.0	50.5	4.4	11610906	56.0	50.0	5	11610881	56.0	50.0	5	11611023
60	61.0	57.15	3.8	11546408	61.0	55.5	4.4	11610907	61.0	55.0	5	11610882	61.0	55.0	5	11611024
65	66.0	62.15	11.5	11546409	66.0	60.5	4.4	11610899	66.0	60.0	5	11610883	66.0	60.0	5	11611025
70	71.0	67.15	16.5	11546410	71.0	65.5	4.4	11610908	71.0	65.0	5	11610875	71.0	65.0	5	11611026
75	76.0	72.15	21.5	11546411	76.0	72.5	4.4	11610909	76.0	70.0	5	11610884	76.0	70.0	5	11611027
80	81.0	77.15	26.5	11546412	81.0	75.5	4.4	11610910	81.0	75.0	5	11610885	81.0	75.0	5	11611028
85	86.1	82.05	31.5	11546413	86.1	80.4	4.4	11610911	86.1	79.9	5	11610886	86.1	79.9	5	11611029
90	91.1	87.05	36.5	11546414	91.1	85.4	21	11610912	91.1	84.9	5	11610887	91.1	84.9	5	11611030
95	96.1	92.05	41.5	11546415	96.1	90.4	26	11610913	96.1	89.9	5	11610888	96.1	89.9	5	11611031
100	101.1	97.05	46.5	11546416	101.1	95.4	31	11610914	101.1	94.9	27	11610889	101.1	94.9	5	11611032
105	106.1	102.05	51.5	11546417	106.1	100.4	36	11610915	106.1	99.9	32	11610890	106.1	99.9	5	11611033
110	111.1	107.05	56.5	11546418	111.1	105.4	41	11610916	111.1	104.9	37	11610891	111.1	104.9	33	11611034
115	116.1	112.05	61.5	11546419	116.1	110.4	46	11610917	116.1	109.9	42	11610892	116.1	109.9	38	11611035
120	121.1	117.05	66.5	11546420	121.1	115.4	51	11610918	121.1	114.9	47	11610893	121.1	114.9	43	11611036
125	126.3	121.95	71.5	11546421	126.3	120.2	56	11610919	126.3	119.7	52	11610894	126.3	119.7	48	11611037
130					131.3	125.2	61	11610920	131.3	124.7	57	11610895	131.3	124.7	53	11611038
135					136.3	130.2	66	11610921	136.3	129.7	62	11610896	136.3	129.7	58	11611039
140					141.3	135.2	71	11610922	141.3	134.7	67	11610897	141.3	134.7	63	11611040
150									151.3	144.7	77	11610898	151.3	144.7	73	11611041
160													161.3	154.7	83	11611042

ATTENTION: Refer to Paragraph 1.4 on page 1.

© Copyright 2017 General Motors Company All Rights Reserved
Copyright General Motors Company
Provided by IHS Markit under license with General Motors Company
No reproduction or networking permitted without license from IHS
Full document details: GMW-R GMW17000 2017
Licensee=, User=,
Not for Resale,
Documents
Document Sharing Hub

REVISION HISTORY

04/29/2009	Initial Release to Global Catalog	Barry Narrin
09/16/2011	Revise title and notes Move page from Application Specific to General Use section	D. DeGroote
09/16/2011	Correct all I_{eff} values	D. DeGroote
10/20/2011	Add all M10 part numbers, revise notes	D. DeGroote
06/08/2012	Remove part 11610901 and add part 11515775	D. DeGroote
08/30/2013	Replace part 11546401 with part 11516327, Replace part 11546403 with part 11515767 and update l1	D. DeGroote
03/14/2014	Replace part11546402 with part 11516328	D. DeGroote
05/01/2014	Remove parts 11610900, 11610902, 11610903 and replace with parts 11516329, 11515776, 11516330	D. DeGroote
02/07/2017	Update format	F. Richard

© Copyright 2017 General Motors Company All Rights Reserved
Copyright General Motors Company
Provided by IHS under license with General Motors Company
No reproduction or networking permitted without license from IHS
Licensee=, User=,
Not for Resale,
Documents
Document Sharing Hub
Full document details: GMW-R GMW17000 2017

Hex Screw and Washer Assemblies with Flat Washer and M-Point

Material:

Bolt: Steel, GMW25 for Property Class, See Table
Washer: SAE J403 Grade 1050-1075 Steel
Hardness, See 2D Print

Surface Treatment:

GMW3359 (Silver)

NOTES

- This fastener is recommended for use against soft surfaces. (e.g. plastic, aluminum)
- For screws with washers with d2 of 24.00mm the recommended maximum clearance hole is 15mm.
- Hex flange bolts are recommended for use in most applications.

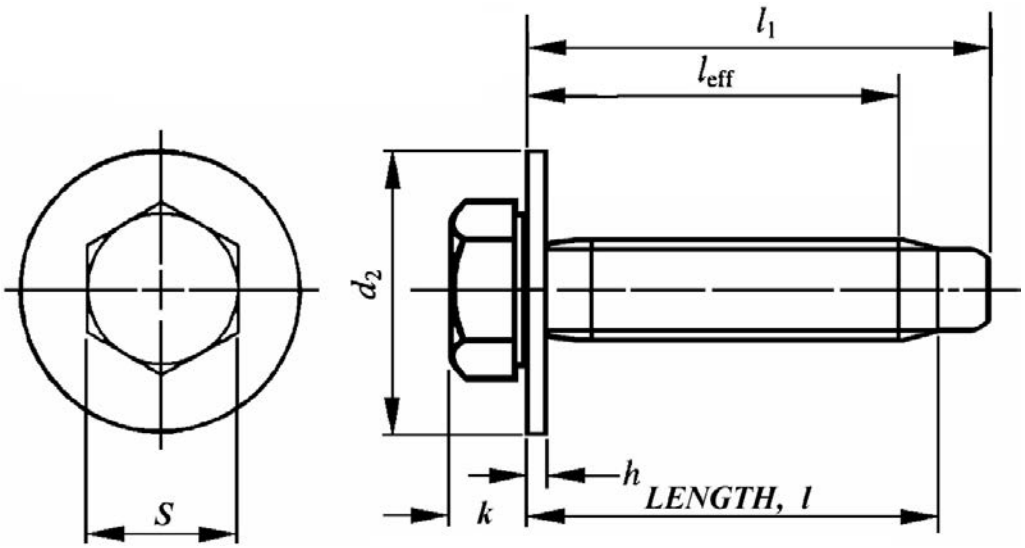

Part Number	Thread / Pitch	Property Class	l nom	l_1 max	l_{eff} min	S max	k max	h max	d_2 max
11519374	M6 x 1.0	8.8	12.0	15.0	9.55	10.0	4.15	1.68	17.00
11519375	M6 x 1.0	8.8	16.0	19.0	13.55	10.0	4.15	1.68	17.00
11571069	M6 x 1.0	8.8	16.0	19.0	13.55	10.0	4.15	2.30	24.00
11519376	M6 x 1.0	8.8	20.0	23.0	17.55	10.0	4.15	1.68	17.00
11570298	M6 x 1.0	8.8	20.0	23.0	17.55	10.0	4.15	2.30	24.00
11519377	M6 x 1.0	8.8	25.0	28.0	22.55	10.0	4.15	1.68	17.00
11570299	M6 x 1.0	8.8	25.0	28.0	22.55	10.0	4.15	2.30	24.00
11519506	M6 x 1.0	8.8	30.0	33.0	27.55	10.0	4.15	1.68	17.00
11570279	M6 x 1.0	8.8	30.0	33.0	27.55	10.0	4.15	2.30	24.00
11519507	M6 x 1.0	8.8	35.0	38.0	32.55	10.0	4.15	1.68	17.00
11570300	M6 x 1.0	8.8	35.0	38.0	32.55	10.0	4.15	2.30	24.00
11519508	M6 x 1.0	8.8	40.0	43.0	37.55	10.0	4.15	1.68	17.00
11570301	M6 x 1.0	8.8	40.0	43.0	37.55	10.0	4.15	2.30	24.00
11519378	M6 x 1.0	8.8	45.0	48.0	42.55	10.0	4.15	1.68	17.00
11611334	M8 x 1.25	8.8	26.6	30.7	23.70	13.0	5.45	2.09	24.0
11546625	M8 x 1.25	8.8	30.0	34.05	27.05	13.0	5.45	2.63	32.0
11611978	M8 x 1.25	9.8	36.45	40.5	32.50	13.0	5.50	2.80	32.0
11609921	M8 x 1.25	10.9	39.95	44.0	37.00	13.0	6.00	2.30	24.0
11562133	M8 x 1.25	8.8	55.0	59.05	52.05	13.0	5.45	2.20	24.0

ATTENTION: Refer to Paragraph 1.4 on page 1.

© Copyright 2017 General Motors Company All Rights Reserved
Page 25 of 107
Copyright General Motors Company
Provided by IHS under license with General Motors Company
No reproduction or networking permitted without license from IHS
Full document details: GMW-R GMW17000 2017
Licensee=, User=,
Not for Resale,
Documents
Document Sharing Hub

REVISION HISTORY

01/11/2006	Correct illustration l_{eff}	J. Pylat
05/09/2007	Wide washers added	B. Narrin
11/09/2007	Part number 11571069 added.	Barry Narrin
11/01/2010	Remove reference to GMW3308	D. De Groote
11/01/2010	Correct h_{max} values to correspond to individual drawings	D. De Groote
02/06/2013	Add part numbers 11611334, 11546625, 11611978, 11609921, 11562133 Add Property class column	Glenn Traister
04/15/2013	Notes added, washer material added	Glenn Traister
02/07/2017	Update format	F. Richard

© Copyright 2017 General Motors Company All Rights Reserved
Copyright General Motors Company
Provided by IHS under license with General Motors Company
No reproduction or networking permitted without license from IHS
Licensee=, User=,
Not for Resale,
Documents
Document Sharing Hub
Full document details: GMW-R GMW17000 2017

Hex Screw and Washer Assemblies with Conical Washer and M-Point

Material:

Bolt: GMW25 (8.8 ≤ M8, 10.9 ≥ M10)
Washer: SAE J403 Grade 1050-1075 Steel
Hardness - See 2D Print

Surface Treatment:

GMW3359 (Silver)

NOTES

- For additional data see GMW3362
- Hex flange bolts are recommended for use in most applications.
- These fasteners should only be used against hard surfaces (e.g. steel) and when needed to cover clearance holes.
- These fasteners should not be used against soft surfaces (e.g. plastic, aluminum).

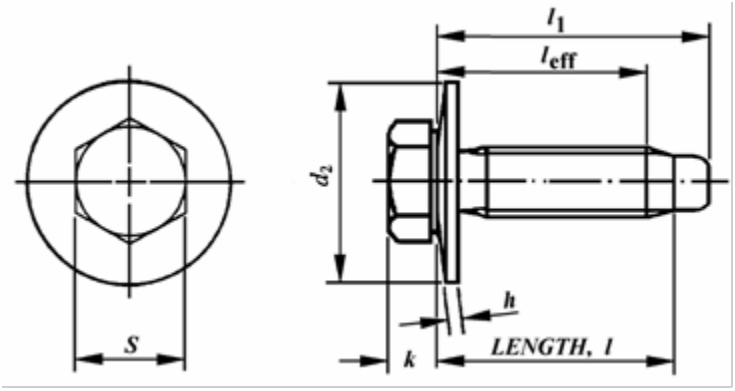

Thread		M6			M8			M10			M12		
P	Pitch	1			1.25			1.5			1.75		
s	Hex	10			13			15			18		
k	max	4.15			5.45			6.58			7.68		
h	max	2.12			2.63			3.15			3.55		
d_2	max	17			24			28			35		
l		l_1	l_{eff}	Part	l_1	l_{eff}	Part	l_1	l_{eff}	Part	l_1	l_{eff}	Part
nom		max	min	number	max	min	number	max	min	number	max	Min	number
12		15.0	9.55	11519381									
16		19.0	13.55	11519382	20.05	13.05	11519386						
20		23.0	17.55	11519383	24.05	17.05	11519387	24.8	16.45	11589163			
25		28.0	22.55	11519384	29.05	22.05	11519388	29.8	21.45	11589164	30.8	20.85	11519535
30		33.0	27.55	11519385	34.05	27.05	11519389	34.8	26.45	11589165	35.8	25.85	11519536
35					39.05	32.05	11519390	39.8	31.45	11589166	40.8	30.85	11519537
40					44.05	37.05	11519526	44.8	36.45	11589167	45.8	35.85	11519538
45					49.05	42.05	11519527	49.8	41.45	11589168	50.8	40.85	11519393
50					54.05	47.05	11519391	54.8	46.45	11589169	55.8	45.85	11519539
55					59.15	51.95	11610545	59.9	51.35	11589170	60.9	50.75	11519540
60											65.9	55.75	11519541
65											70.9	60.75	11519542
70								75.05	66.50	11571100	75.9	65.75	11519543
80								85.1	76.35	11611595	85.9	75.75	11519544
85											90.9	80.75	11570800

© Copyright 2017 General Motors Company All Rights Reserved
Page 27 of 107
Copyright General Motors Company
Provided by IHS under license with General Motors Company
No reproduction or networking permitted without license from IHS
Full document details: GMW-R GMW17000 2017
Licensee=, User=,
Not for Resale,
Documents Document Sharing Hub

REVISION HISTORY

06/18/2002	M10 Hex changed to 15mm. s, k and h changed. l_1 and l_{eff} changed to reference bearing surface of hex head instead of washer.	
09/09/2002	Errors corrected in h max row, M6 and M8 columns, and s value of M10 column.	
02/19/2003	New Part Number Series added for M10 15mm s value. This was done because there were already releases of the 16mm hex parts when the value was changed to 15mm.	
03/28/2008	Errors corrected in h max row for M6 column	Barry Narrin
06/13/2008	Part Number 11610545 added	Barry Narrin
12/01/2008	Part Number 11570800 added	Barry Narrin
11/01/2010	Remove reference to GMW3305	D. De Groote
11/01/2010	Added part number 11611595	U. Kremer
04/15/2013	Added part number 11571100, added notes, added washer material	Shawn Roberts
02/07/2017	Update format	F. Richard

© Copyright 2017 General Motors Company All Rights Reserved
Copyright General Motors Company
Provided by IHS under license with General Motors Company
No reproduction or networking permitted without license from IHS
Licensee=, User=,
Not for Resale,
Documents
Document Sharing Hub
Full document details: GMW-R GMW17000 2017

Styled Pan Head Tapping Screw with BR Point

Material:
ISO2702

Surface Treatment:
GMW16730

NOTES
- Spaced thread screws with separate multi-thread nuts is the most preferred tapping solution.
- BR is the preferred point.
- Do NOT use these tapping screws directly into plastic or sheet metal.
- If your clearance hole is above 7 mm, recommend using screw with washer (hex washer head)

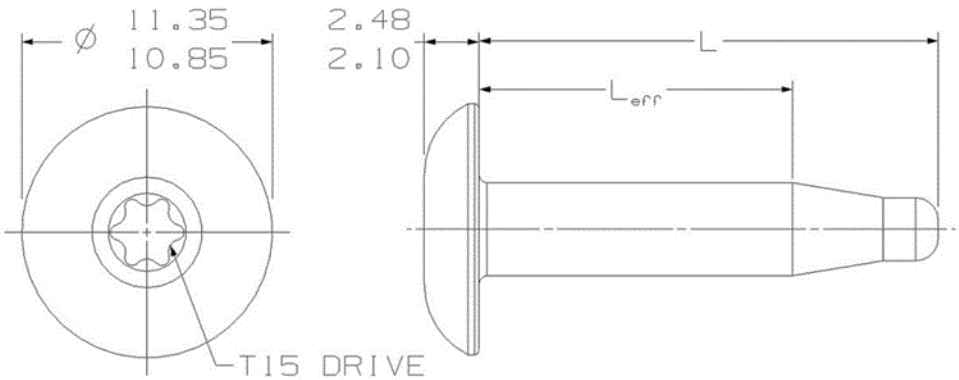

Metric/Inch	**Metric**
Noun Name	**Bolt/Screw**
Head Shape	**Styled Pan**
Bearing Face	**Pan head**
Driver Type	**T15**
Thread	**Spaced**
Diameter	**4.2**
Pitch	**1.41**
Material	**ISO2702**
Point Type	**BR**
Finish	**GMW4205**

Part Number	***L (length)***			***L_{eff}* min**
	nom	**min**	**max**	
11611880	10	9.2	10.8	4.2
11611881	13	12.2	13.8	7.2
11611882	16	15.2	16.8	10.2
11611883	20	19.2	20.8	14.2
11611884	25	24.2	25.8	19.2
11611885	30	28.7	31.3	23.7
11611886	35	33.7	36.3	28.7

© Copyright 2017 General Motors Company All Rights Reserved
Copyright General Motors Company
Provided by IHS under license with General Motors Company
No reproduction or networking permitted without license from IHS
Full document details: GMW-R GMW17000 2017
Licensee=, User=,
Not for Resale,
Documents Document Sharing Hub

REVISION HISTORY

09/09/2003	Finish Changed to GMW4205 and New Part Numbers replaced old part numbers.	
04/29/2011	Removed and replaced all part numbers and art to update new head style. Change page name to reflect head style change.	G. Traister
02/06/2013	Finish Changed to GMW16730 per the part prints	D. Brender
02/07/2017	Update format	F. Richard

© Copyright 2017 General Motors Company All Rights Reserved
Page 30 of 107
Copyright General Motors Company
Provided by IHS under license with General Motors Company
No reproduction or networking permitted without license from IHS
Licensee=, User=,
Not for Resale,
Documents
Document Sharing Hub
Full document details: GMW-R GMW17000 2017

M4.2 Hex Washer Head Tapping Screw Assembly with Flat Washer BR Point

Material:
ISO 2702

Surface Treatment:
GMW4205

NOTES

- To be used with Multi-Threaded U-nuts & Expansion Type Nuts.
- Fastening directly into plastic is not a recommended practice for a robust attachment.
- The recommended clearance holes are 5.0 mm diameter for Regular series washers, and 8.0mm diameter for Wide series washers.
- Not to be used for structural attachments.
- For the recommended Torque Specification see the Global Standard Torque Specification sheet located on the Global Fastening Resource Center website.

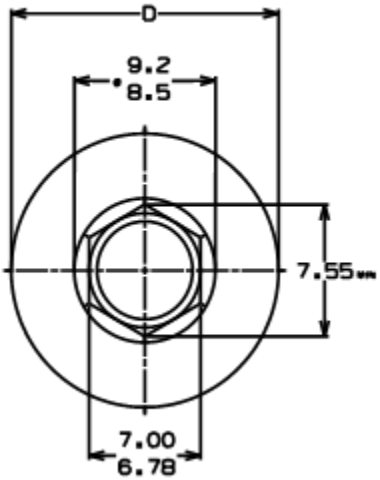

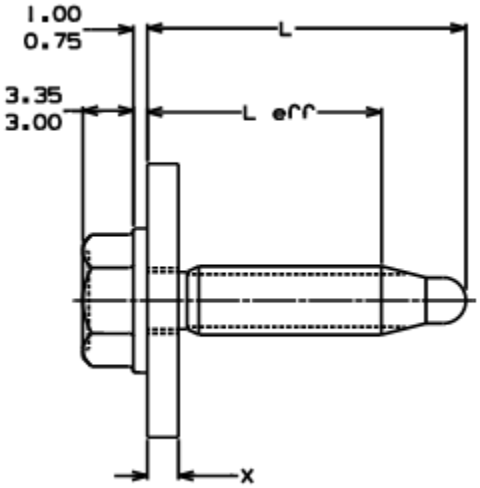

Part Number	Thread / Pitch	Series	D		X		L			L eff min
			min	max	min	min	nom	min	max	
11589010	M4.2 X 1.41	Regular	12.07	12.50	1.0	1.4	13	12.2	13.8	7.2
11589011	M4.2 X 1.41	Regular	12.07	12.50	1.0	1.4	16	15.2	16.8	10.2
11589015	M4.2 X 1.41	Regular	12.07	12.50	1.0	1.4	20	19.2	20.8	14.2
11589012	M4.2 X 1.41	Regular	12.07	12.50	1.0	1.4	25	24.2	25.8	19.2
11589013	M4.2 X 1.41	Regular	12.07	12.50	1.0	1.4	30	28.7	31.3	23.7
11589014	M4.2 X 1.41	Regular	12.07	12.50	1.0	1.4	35	33.7	36.3	28.7
11570497	M4.2 X 1.41	Wide	16.57	17.00	1.6	2.3	16	15.2	16.8	10.2
11570498	M4.2 X 1.41	Wide	16.57	17.00	1.6	2.3	20	19.2	20.8	14.2
11570499	M4.2 X 1.41	Wide	16.57	17.00	1.6	2.3	25	24.2	25.8	19.2
11610068	M4.2 X 1.41	Wide	16.57	17.00	1.6	2.3	30	28.7	31.3	23.7

© Copyright 2017 General Motors Company All Rights Reserved
Copyright General Motors Company
Provided by IHS under license with General Motors Company
No reproduction or networking permitted without license from IHS
Full document details: GMW-R GMW17000 2017
Licensee=, User=,
Not for Resale,
Documents
Document Sharing Hub

REVISION HISTORY

03/05/2007	Wide series washer added.	Barry Narrin
02/07/2017	Update format	F. Richard

© Copyright 2017 General Motors Company All Rights Reserved
Copyright General Motors Company
Provided by IHS under license with General Motors Company
No reproduction or networking permitted without license from IHS
Licensee=, User=,
Not for Resale,
Documents
Document Sharing Hub
Full document details: GMW-R GMW17000 2017

NUTS:

Hexagon Nut, Spring Steel for T5 Studs

Material:
SAE J403 Grade 1050 – 1065 Carbon Spring Steel

Surface Treatment:
GMW3359

NOTES
- This nut is intended to be used on weld studs, fir tree thread T5.

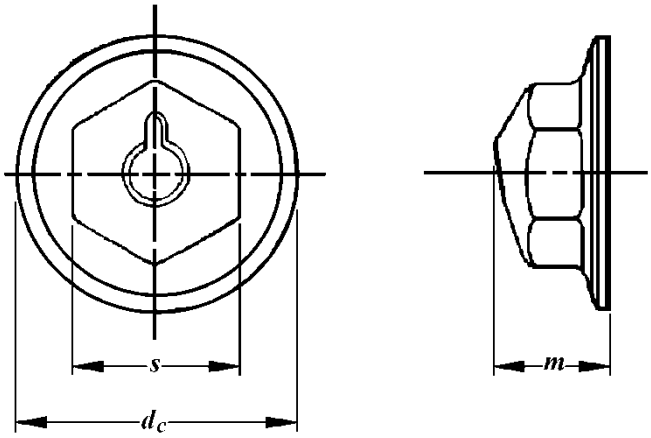

Part Number	Thread	Pitch	s max	m max	d_c max
11609656	T5	1.6	10.00	6.65	14.00

© Copyright 2017 General Motors Company All Rights Reserved
Copyright General Motors Company
Provided by IHS under license with General Motors Company
No reproduction or networking permitted without license from IHS
Licensee=, User=,
Not for Resale,
Documents Document Sharing Hub
Full document details: GMW-R GMW17000 2017