SECTION 4

Instrumentation

Instrumentation in a gas processing plant is usually comprised of a system of pneumatic, hydraulic, and electronic devices for measurement and control of all the process variables (pressure, flow, temperature, etc.) which are pertinent to the operation of the plant. In addition, microprocessors are normally included in the instrumentation system to handle functions such as data gathering and transmission, bulk data storage, display, alarms, logging, computations, and control. Since the advent of integrated circuit electronics, specifically the microprocessor, many types of instruments are becoming more intelligent or "computerized."

The basic purposes of this section are to provide:

- A ready reference of definitions and symbols associated with gas plant instrumentation.
- Guidelines and design information for good process measurement, signal transmission, signal indication, and control response.
- A reference of terminology which pertains to the instrumentation of gas plants and related facilities.

FIG. 4-1

Nomenclature

Controller Symbol	Description	Output Expression
P	Proportional	$CO = K_p (PV - SP) + MO$
I	Integral (Reset)	$CO = K_i \int (PV - SP)\, dt$
D	Derivative (Rate)	$CO = K_d[d(PV - SP)/dt]$

C_v = valve flow coefficient
CO = controller output
d = valve inlet diameter
D = internal diameter of the pipe
F_d = valve style modifier
F_F = liquid critical pressure ratio factor, dimensionless
F_k = ratio of specific heats factor, dimensionless
F_L = liquid pressure recovery factor of a valve without attached fittings, dimensionless
F_p = piping geometry factor, dimensionless
F_R = Reynolds number factor, dimensionless
G_f = liquid relative density at upstream conditions, ratio of density of liquid at flowing temperature to density of water at 15.6 °C, dimensionless
G_g = gas relative density (ratio of density of flowing gas to density of air with both at standard conditions, which is equal to the ratio of the molecular mass of gas to the molecular mass of air), dimensionless
k = ratio of specific heats, dimensionless
K = gain
K_c = cavitation index, dimensionless
K_d = derivative gain constant
K_i = integral mode gain constant
K_n = normalization constant
K_p = proportional mode gain constant
K_u = ultimate sensitivity
M = molecular mass, atomic mass units
MO = manual-mode controller output
$N_1, N_2 \ldots N_x$ = numerical constants for units of measurement used
P_c = absolute thermodynamic critical pressure
P_u = ultimate time period
P_v = vapor pressure of liquid at valve inlet temperature, kPa (abs)
P_1 = upstream absolute static pressure, measured two nominal pipe diameters upstream of valve-fitting assembly, kPa (abs)
P_2 = downstream absolute static pressure, measured six nominal pipe diameters downstream of valve-fitting assembly, kPa (abs)
ΔP = pressure differential, $P_1 - P_2$
PB = proportional band setting
PB_u = ultimate proportional band setting
PV = process variable measurement
(PV – SP) = error signal
q = volumetric flow rate
Q_g = gas or vapor flow rate, kg/h or cu m^3/h
Q_L = liquid flow rate, m^3/h
SP = setpoint
T = absolute temperature of gas at inlet, K
T_c = time constant
T_d = derivative mode time constant
T_i = integral mode time constant
T_t = absolute upstream temperature (in degrees K)
w = weight or mass flow rate
X = ratio of pressure drop to absolute inlet pressure ($\Delta P/P_1$), dimensionless
X_c = pressure drop ratio for the subject valve at critical flow, with $F_k = 1.0$, dimensionless
Y = expansion factor, ratio of flow coefficient for a gas to that for an incompressible fluid at the same Reynolds number, dimensionless
Z = compressibility factor, dimensionless
γ_1 = specific weight, upstream conditions
ξ = damping factor

Documents
Document Sharing Hub
Full document details: GPSA M04 2016

DEFINITIONS OF WORDS AND PHRASES USED IN INSTRUMENTATION

A/D: Analog-to-digital.

Actuator: A device which accepts the output from a control system and moves a final control element (usually a valve) to change a process condition. See also "Final Control Element."

Adaptive control: Method of control whereby tuning (response) of the control system is varied with the process conditions, unlike other control where tuning is manual and remains constant.

Algorithm: Mathematical representation of the action performed by a controller such as proportional, integral, derivative, or combinations of those modes.

Alphanumeric: A character set that contains both letters and digits and perhaps other characters such as punctuation marks.

Analog computer: A computing device comprised of functional modules such as amplifiers, multipliers, dividers, etc., interconnected in such a way as to facilitate the solution of a set of mathematical expressions or to implement some control strategy. The input to and the output from an analog computer are continuous signals as contrasted with a digital computer which updates an output every scan.

Attenuation: An increase or decrease in signal magnitude between two points or between two frequencies.

Baud rate: The number of bits or discrete pieces of information transmitted per second.

Bit: Abbreviation for "binary digit." A single character in a binary number, represented by zero (0) or one (1).

Byte: The number of adjacent binary digits operated upon as a unit.

Cascade control: Controllers arranged such that the output of one controller manipulates the setpoint input of a second controller instead of manipulating a process variable directly.

Control action, derivative (rate): Control action in which the controller output is proportional to the rate of change of the input.

Control action, integral (reset): Control action in which the controller output is proportional to the time integral of the error signal.

Control action, proportional: Control action in which the controller output has a linear relationship to the error signal.

Controller: A device which receives a measurement of the process variable, compares that measurement with a setpoint representing the desired control point, and adjusts its output based on the selected control algorithm to minimize the error between the measurement and the setpoint. If an increase in the measured process variable above the setpoint causes an increase in the magnitude of the controller output, the controller is said to be "direct acting." If a process variable increase above the setpoint causes a decrease in the magnitude of the controller output, the controller is "reverse acting."

Data base: A collection of values for process variables, setpoints, scaling factors, control parameters, limits, constants, identifiers, etc. for access by the application programs in a computer-based control system.

Data highway: A high-speed serial or parallel data path which connects several units of a distributed control or data collection system.

DDC: Direct Digital Control. A control technique in which a digital computer is used as the sole controller and its output is used to set the final control element. This is in contrast to supervisory control.

Dead band: The range through which an input may vary without changing the output. In a mechanical instrument such as a meter movement or strip-chart recorder, the dead band is caused by friction and slack or "play" in the readout mechanism. In a controller, dead band is a zone around the setpoint in which the measurement may vary without initiating a compensating controller response.

Dead time: The interval of time lag between the initiation of a controller output or stimulus and the start of the resulting observable process response.

Dedicated control: Using one controller to control one process variable.

Derivative control: A mode of control using an algorithm which anticipates when a process variable will reach its desired control point by sensing its rate of change. This allows a control change to take place before the process variable overshoots the desired control point. See also "Control Action, Derivative (Rate)."

Derivative time: The time difference by which the output of a proportional-derivative (PD) controller leads the controller input when the input changes linearly with time.

Digital computer: An electronic machine for performing calculations on discrete quantities of data. Usually includes bulk storage devices such as disks, tape units, etc., in addition to internal memory. Also includes devices for printing and/or displaying output data.

Distributed control system: Any control system in which the degradation or failure of any single element will affect only the control loop, or related loops, in which it operates.

EPROM (erasable programmable read-only memory): A memory device with information placed into it during manufacture that cannot be altered by the computer. It can only be erased and reprogrammed with special equipment.

Error signal: The signal resulting from the difference between the setpoint reference signal and the process variable feedback signal in a controller.

Feedback control: A type of control whereby the controller receives a feedback signal representing the condition of the controlled process variable, compares it to the setpoint, and adjusts the controller output accordingly.

Feedforward control: A type of control which takes corrective action based on disturbances before the process variable is upset.

Final control element: That component of a control system (such as a valve) which directly changes the manipulated variable.

Documents
Document Sharing Hub

Full document details: GPSA M04 2016

Gain: The ratio of change in output divided by the change in input that caused it. Both input and output must be in the same units; hence gain is a dimensionless number. Gain is the reciprocal of Proportional Band (PB).

Hierarchy: The ranking or precedence of the elements in a supervisory system. For example, a lower ranking element such as a local controller affects only one variable while a higher ranking element such as a computer might affect many variables.

Hysteresis: Difference between upscale and downscale output in instrument response when subjected to the same input approached from opposite directions.

Integral (reset) control: A control algorithm which attempts to eliminate the offset (caused by proportional control) between the measurement and setpoint of the controlled process variable. See also "Control Action, Integral (Reset)."

Integral (reset) time: The proportionality constant in the equation relating the controller output to the error for integral control $CO = K_i \int (PV - SP)\, dt$. It is usually expressed as Minutes per Repeat. Where: $K_i = K_p/T_i$. K_p is the integral gain of the controller. T_i is the time required to produce a change in controller output equal to the change in error input.

Integral windup/windown: Also called "controller windup/windown" or "reset windup." Saturation of the controller output at its maximum positive or negative value due to an error signal existing for an excessive period of time. Can be caused by the controller being left on "automatic" when the measurement transmitter is out of service.

Intrinsically safe: Refers to equipment or wiring which is incapable of releasing sufficient electrical or thermal energy under either abnormal or normal conditions to cause ignition of a specific hazardous atmospheric mixture in its most easily ignited concentration.

I/P transducer: (Current-to-pneumatic). A device which converts an electrical current signal to a proportional pneumatic signal for the purpose of interfacing electronic and pneumatic parts of a control system. A typical I/P transducer might convert a 4-20 mA signal from an electronic controller to a 20-100 kPa (ga) signal to actuate a pneumatic valve.

I/O devices: Input/output devices used to enter data into and receive data from a computer or control system. Examples are analog and digital input and output devices for handling process measurements and conditions as well as "business" type devices such as terminals, printers, plotters, etc.

Noise: In process instrumentation, an unwanted component of a signal or variable. Noise may be expressed in units of the output or in percent of output span.

Offset: The steady-state deviation of the controlled variable from the set-point, usually caused by a disturbance or a load change in a system employing a proportional-only controller such as a level controller. Offset will eventually be reduced to zero by the integral action in a PI or PID controller.

P controller: A controller which produces proportional control action only.

Parallel data: Data transmission where all data bits of a data word are processed at once.

PD controller: A controller which produces proportional plus derivative (rate) control action.

PI controller: A controller which produces proportional plus integral (reset) control action.

PID controller: A controller which produces proportional plus integral (reset) plus derivative (rate) control action.

PROM (programmable read-only memory): A device with information placed into it during manufacture that cannot be altered by the computer. It can, however, be reprogrammed using special equipment.

Proportional band: The change in the controller error signal required to produce a full range change in output due to proportional control action. It is the reciprocal of gain expressed as a percentage: PB(%) = 100/k.

Proportional control: A mode of control using an algorithm which causes the output of a controller to change in a linear fashion as the error signal (process variable – setpoint difference) changes. See also "Control Action, Proportional."

RAM (random access memory): Memory which contains no pre-programmed information but is loaded and/or altered by the computer system. It is of a "volatile" nature in that all the contents are lost when electrical power is removed. RAM memories are usually provided with battery backup power systems, making it "non volatile."

Ramp: An increase or decrease of a variable at a constant rate of change with respect to time.

Reset rate: The inverse of integral time; usually expressed as "repeats per minute."

ROM (read-only memory): Memory with information placed into it during manufacture that cannot be altered.

Serial communications: Sending bits of information in succession along a single circuit (pair of wires).

Setpoint: The desired value at which a process variable is to be controlled.

Software: A set of programs and associated data tables which causes the hardware components of a computer system to perform the desired tasks.

Split-ranging: Action in which two or more final control elements are actuated by a single controller output. For example, in a heating circuit, 0-50% of the controller output operates a primary heat source and the 50-100% portion of the controller output operates a secondary heat source.

Steady-state: The condition when all process properties are constant with time, transient responses having died out.

Supervisory control: A method of computer control whereby a computer or master station provides setpoints to individual controllers which independently perform the actual control algorithms.

System control diagram: A diagram used to define the process functionality to achieve the overall operating and control philosophy.

Telemetry: A technique which permits a measured quantity to be transmitted and interpreted at a distance from the measuring location. Form, or types of telemetry include analog, digital, frequency, and pulse.

Documents
Document Sharing Hub

Full document details: GPSA M04 2016

Transmitter: A device that converts a process measurement (pressure, flow, level, temperature, etc.) into an electrical or pneumatic signal suitable for use by an indicating or control system.

Word, computer: A group of bits treated as a unit and capable of being stored in one computer location. Some common word lengths are 8 bits, 16 bits, and 32 bits.

GENERAL INSTRUMENTATION CONSIDERATIONS

Type Selection

Often the type selection of an instrument is pre-determined by whatever is available, or what will be compatible with the rest of a system. There are cases, however, where the choice to install pneumatic or electronic instrumentation must be made by comparing the features of each type. Fig. 4-3 lists some of the attributes of each type to aid in this comparison.

Identification

An instrument may perform a single function such as a temperature indicator (TI), or a combination of functions such as a flow recording controller (FRC). Fig. 4-2 covers the common symbols on process and mechanical flow sheets, also called Piping and Instrument Diagrams (P&IDs). The table in Fig. 4-2 shows the accepted International Society of Automation (ISA) letter designations and their meanings when used in instrument identifications. See ANSI/ISA- 5.1-2009 "Instrumentation Symbols and Identification" for the most current symbol listings. Special identification requirements may be encountered in certain applications, e.g., offshore requirements of API-RP 14-C. International Society of Automation publication ISA-S5.1, "Instrumentation Symbols and Identification," should be referred to for more detailed information.

PNEUMATIC POWER SUPPLIES

The pneumatic power supply is more commonly known as the instrument air system. The main considerations of an instrument air system are:

1. Adequate Capacity: The minimum capacity of the system should be the sum of the individual requirements of each air-consuming instrument in the system, plus a supplemental volume for purges, leaks, additions, etc. If accurate consumption figures are not available, an estimated consumption volume of 0.82 m^3 per hour for each air-consuming device is usually adequate. The air storage tank should have sufficient capacity to maintain this rate for about five minutes or such time as is considered adequate to perform an emergency shut-down of the plant or to switch over to a backup air system. Also the air storage tank capacity should be large enough to prevent excessive cycling of the compressor.

2. Filtering and Regulation: Instrument air systems are normally designed for pressures up to 875 kPa (ga) and should be protected by relief valves. Instrument air should be free from all contamination such as oil, water, and any hazardous or corrosive gases. Non-lubricated compressors should be used if possible. Where lubricated compressors are used, an oil removal separator is required. The presence of oil may cause instrument contamination and possibly create a combustible mixture. After being compressed, instrument air must be cooled to remove the major portion of the contained water. A final drying system must be used to reduce the water dewpoint to at least 6 °C below the ambient temperature at line pressure. An afterfilter may be required to remove particulate carryover from the dehydrators.

3. Proper Distribution: The air distribution system should be free of any "pockets" where liquid could accumulate. If this is not possible, drain valves should be installed. All supply lines should connect to the top of the air manifold or "header." Instrument air filter-regulators should be provided at each air-consuming device to reduce the line pressure to the supply pressure recommended by the instrument manufacturer. This also provides one more stage of protection from contaminants. International Society of Automation ANSI/ISA-7.0.01-1996-Quality Standard for Instrument Air references for additional information.

4. Non-Air Systems: Natural gas has been used instead of instrument air in some remote installations where compressed air was not available. This practice should be avoided if at all possible due to safety and pollution problems and the additional filtering and clean-up of the gas which must be done to protect the instruments. The user must be cognizant of all applicable regulations when considering the use of any combustible gas in instrumentation service. "Green House Gas" legislation should be considered. Some small-scale systems have used bottled nitrogen for instrument gas. This is quite acceptable, but non-bleed type instruments should be used to keep the consumption to a minimum.

5. Hydraulic Powered Devices: Hydraulic actuators are sometimes used on valves or rams where very high thrusts (up to 3500 kgf) are required for operation. Due to the problems of transmitting very high pressure signals, a local pump powered by an electric motor is often used to form what is commonly known as an "electro-hydraulic actuator."

ELECTRONIC POWER SUPPLIES

Practical safeguarding of persons and property for the installation of electrical systems are provided by the National Electrical Code (NEC), NFPA 70, Article 500 (Hazardous Locations) and Article 725 (Remote Control & Signal Circuits). Special attention should be given to Article 725. The authority having jurisdiction adopts and enforces the National Electrical Code. The requirements pertaining to physical protection of wiring, isolation and spacing of conductors depending upon class, and minimum wire sizes are often overlooked in an instrumentation installation. Engineers and Designers must consider the Electrical Area Hazardous Classification before the installation of electronic devices and raceway systems in a facility processing hydrocarbons. Section 18 Utilities (Building and Area Classification) of the GPSA covers in more detail the Electrical device and raceway installation methods and descriptions.

Documents
Document Sharing Hub
Full document details: GPSA M04 2016

FIG. 4-2
Instrumentation Symbols

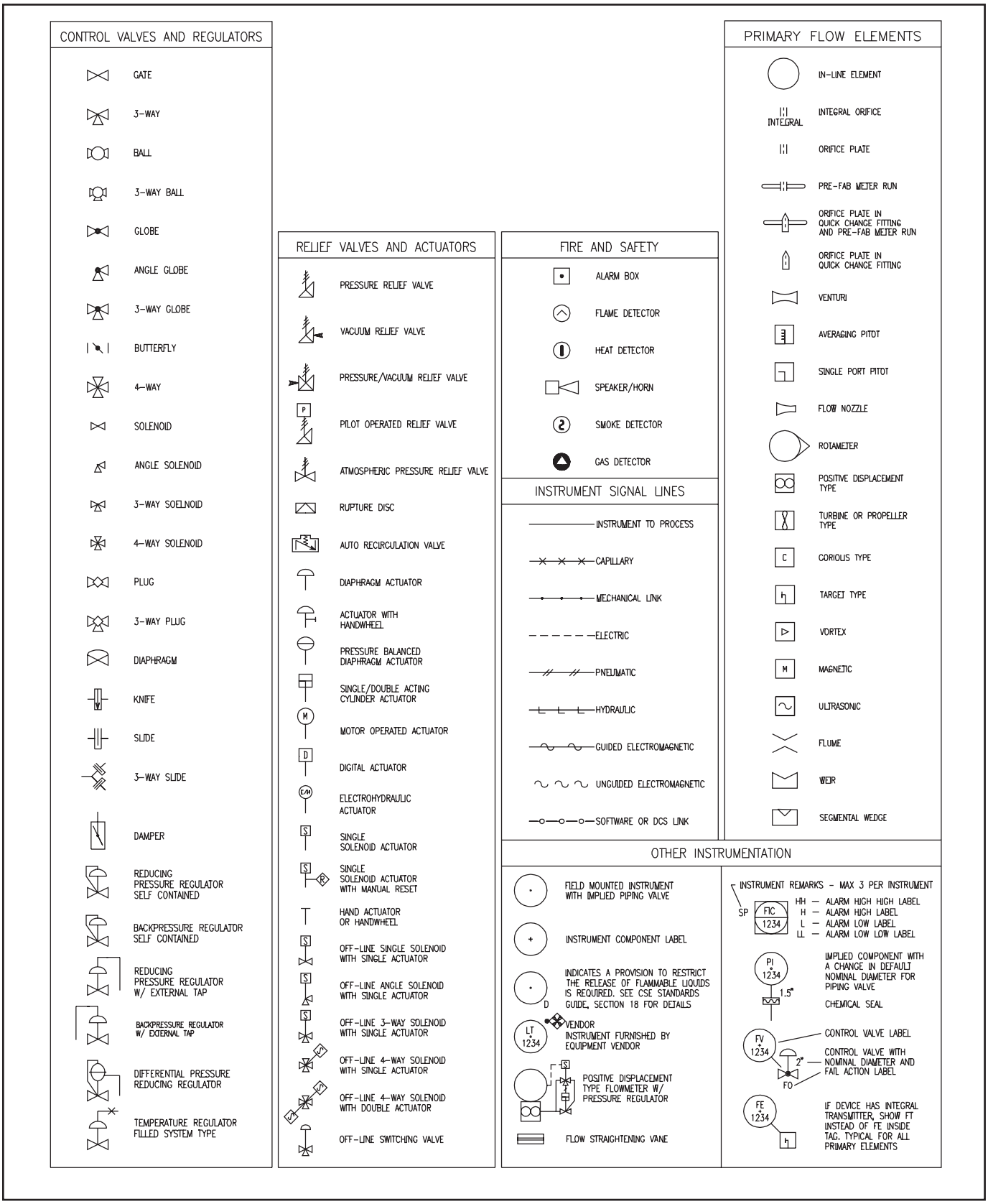

Documents
Document Sharing Hub
Full document details: GPSA M04 2016

FIG. 4-2 (Cont'd)
Instrumentation Symbols

INSTRUMENT OR FUNCTION SYMBOLS

- FIELD MOUNTED INSTRUMENT
- INSTRUMENT MOUNTED ON MAIN CONTROL ROOM PANEL
- INSTRUMENT MOUNTED BEHIND MAIN CONTROL ROOM PANEL
- INSTRUMENT FUNCTION MOUNTED ON LOCAL PANEL
- INSTRUMENT FUNCTION MOUNTED BEHIND LOCAL PANEL
- INSTRUMENT SHOWN ON ANOTHER DRAWING
- FIELD MOUNTED LIGHT
- LIGHT MOUNTED ON MAIN CONTROL ROOM PANEL
- LIGHT MOUNTED ON LOCAL PANEL
- LOCAL DCS SHARED CONTROL FUNCTION
- PRIMARY DCS SHARED DISPLAY SHARED CONTROL FUNCTION ACCESSIBLE TO OPERATOR
- PRIMARY DCS SHARED DISPLAY SHARED CONTROL FUNCTION INACCESSIBLE TO OPERATOR
- AUXILIARY DCS SHARED DISPLAY SHARED CONTROL FUNCTION ACCESSIBLE TO OPERATOR
- AUXILIARY DCS SHARED DISPLAY SHARED CONTROL FUNCTION INACCESSIBLE TO OPERATOR
- HARD WIRED INTERLOCK
- LOCAL PLC SHARED CONTROL FUNCTION
- PRIMARY PLC SHARED DISPLAY SHARED CONTROL FUNCTION ACCESSIBLE TO OPERATOR
- PRIMARY PLC SHARED DISPLAY SHARED CONTROL FUNCTION INACCESSIBLE TO OPERATOR
- PRIMARY COMPUTER SHARED DISPLAY AUXILIARY PLC SHARED DISPLAY SHARED CONTROL FUNCTION ACCESSIBLE TO OPERATOR
- PRIMARY COMPUTER SHARED DISPLAY AUXILIARY PLC SHARED DISPLAY SHARED CONTROL FUNCTION INACCESSIBLE TO OPERATOR
- LOCAL COMPUTER SHARED CONTROL FUNCTION
- SHARED CONTROL FUNCTION ACCESSIBLE TO OPERATOR
- SHARED CONTROL FUNCTION INACCESSIBLE TO OPERATOR
- AUXILIARY COMPUTER SHARED DISPLAYED SHARED CONTROL FUNCTION ACCESSIBLE TO OPERATOR
- AUXILIARY COMPUTER SHARED DISPLAYED SHARED CONTROL FUNCTION INACCESSIBLE TO OPERATOR

INSTRUMENT SYMBOLOGY DEFINITION

MEANINGS OF IDENTIFICATION LETTERS

THIS TABLE APPLIES ONLY TO THE FUNCTIONAL IDENTIFICATION OF INSTRUMENTS

	FIRST-LETTER		SUCCEEDING-LETTERS		
	MEASURED OR INITIATING VARIABLE	MODIFIER	READOUT OR PASSIVE FUNCTION	OUTPUT FUNCTION	MODIFIER
A	ANALYSIS		ALARM		
B	BURNER, COMBUSTION		USER'S CHOICE	USER'S CHOICE	USER'S CHOICE
C	USER'S CHOICE			CONTROL	
D	USER'S CHOICE	DIFFERENTIAL			
E	VOLTAGE		SENSOR (PRIMARY ELEMENT)		
F	FLOW RATE	RATIO (FRACTION)			
G	USER'S CHOICE		GLASS, VIEWING DEVICE		
H	HAND				HIGH
I	CURRENT (ELECTRICAL)		INDICATE		
J	POWER	SCAN			
K	TIME, TIME SCHEDULE	TIME RATE OF CHANGE		CONTROL STATION	
L	LEVEL		LIGHT		LOW
M	USER'S CHOICE	MOMENTARY			MIDDLE, INTERMEDIATE
N	USER'S CHOICE		USER'S CHOICE	USER'S CHOICE	USER'S CHOICE
O	USER'S CHOICE		ORIFICE, OPEN		
P	PRESSURE, VACUUM		POINT (TEST) CONNECTION		
Q	QUANTITY	INTEGRATE, TOTALIZE			
R	RADIATION		RECORD		
S	SPEED, FREQUENCY	SAFETY		SWITCH	
T	TEMPERATURE			TRANSMIT	
U	MULTIVARIABLE		MULTIFUNCTION	MULTIFUNCTION	MULTIFUNCTION
V	VIBRATION, MECHANICAL ANALYSIS			VALVE, DAMPER, LOUVER	
W	WEIGHT, FORCE		WELL		
X	UNCLASSIFIED	X AXIS	UNCLASSIFIED	UNCLASSIFIED	UNCLASSIFIED
Y	EVENT, STATE OR PRESENCE	Y AXIS		RELAY, COMPUTE, CONVERT	
Z	POSITION, DIMENSION	Z AXIS		DRIVER, ACTUATOR UNCLASSIFIED FINAL CONTROL ELEMENT	

NOTE: FOR FURTHER EXPLANATORY NOTES WITH REGARD TO ABOVE TABLE, SEE ANSI/ISA-S5.1 STANDARD ENTITLED "INSTRUMENTATION SYMBOLS AND IDENTIFICATION"

FUNCTION LABELS

Σ	SUMMING FUNCTION	√	ROOT EXTRACTION FUNCTION	-K	REVERSE PROPORTIONAL FUNCTION
Σ/n	AVERAGING FUNCTION	X^n	EXPONENTIAL FUNCTION	I/P	CURRENT TO PNEUMATIC
Δ	DIFFERENCE FUNCTION	f(x)	UNSPECIFIED FUNCTION	P/I	PNEUMATIC TO CURRENT
K	PROPORTIONAL FUNCTION	f(t)	TIME FUNCTION	+	BIAS FUNCTION
∫	INTEGRAL FUNCTION	>	HIGH SELECTING FUNCTION	−	BIAS FUNCTION
d/dt	DERIVATIVE FUNCTION	<	LOW SELECTING FUNCTION	±	BIAS FUNCTION
X	MULTIPLYING FUNCTION	≯	HIGH LIMITING FUNCTION		
÷	DIVIDING FUNCTION	≮	LOW LIMITING FUNCTION		

AVA Documents
Document Sharing Hub
Full document details: GPSA M04 2016

Power Outages and Interruptions

It is usually the responsibility of the consumer, not the electric utility company, to provide protection for connected electronic equipment against upsets such as voltage spikes caused by lightning, high or low voltage surges, etc. The frequency of power outages and average time for service to be restored should be determined to assist in the design of electronic power supply protection and battery backup systems. The power company should be able to provide data about their reclosure gear (equipment which attempts to restore service after a current surge has tripped the substation or sectionalizing breakers). Also, a record of power outages in the local substation area and storm frequency charts will be very useful. A typical reclosure operation description is shown in Fig. 4-4.

Example 4-1 — If a plant can tolerate loss of power to its electronic equipment for six seconds, and an average of 50 power outages per year are expected, then, according to Fig. 4-4, 84% of those outages will be restored on the first reclosure attempt, and the remaining 16% or approximately eight power outages per year can be expected to disrupt plant operations. Note: Storm frequency charts are often available from manufacturers of surge arresting devices. These charts may be used in case power outage records are not available from the power company. Climatic data for a particular area may be obtained from the National Oceanic and Atmospheric Administration (NOAA) in Asheville, North Carolina.

FIG. 4-3

Instrument Type Features

Pneumatic	Electronic
Advantages	
1. Intrinsically safe, no electrical circuits. 2. Compatible with valves. 3. Reliable during power outage for short period of time, dependent on size of air surge vessel.	1. Greater accuracy at less cost. 2. More compatible with computers and sharing information. 3. Fast signal transit time. 4. No signal integrity loss if current loop is used and signal is segregated from A.C. current.
Disadvantages	
1. Subject to air system contaminants. 2. Subject to air leaks. 3. Mechanical parts may fail due to dirt, sand, water, etc. 4. Signal boosters often needed on transmission lines of over 90 meters. 5. Subject to freezing with moisture present. 6. Control speed is limited to velocity of sound.	1. Must be air purged, explosion proof, or intrinsically safe to be used in hazardous areas. 2. Subject to electrical interference. 3. More difficult to provide for positive fail-safe operation.

Power Supply Specifications

Three manufacturer specifications which should be carefully noted are: (1) regulation, (2) ripple, and (3) short-circuit protection. Regulation is an indication of how well power supply output voltage remains constant as the electrical load is removed and re-connected. Good regulation implies no interaction between connected devices on the same power supply. Ripple is the amount of AC variation on the DC output with a constant load on the power supply. This is especially critical when the outputs of transmitters are connected to analog-to-digital (A/D) converters in a computer or microprocessor based installation. For example, if the A/D precision allows resolution to the nearest 10 millivolts, power supply ripple should be less than 1/3 of this or 3.3 millivolts, unless the noise can be rejected by the converter. Short-circuit protection is a means by which the power supply current is limited at a safe maximum in case the output is accidentally shorted-out at some point. All power supplies should include short circuit protection to prevent serious damage. Power supplies should always have the common side of the output separate from chassis ground to permit the common to be grounded at a single point to a "high quality" instrument ground.

Uninterruptible Power Supplies

Uninterruptible Power Supplies (UPS), often referred to as battery back-up systems, should be sized to span the third reclosure time if power supply levels must be maintained to minimize erratic plant behavior. However, if the instrument air compressor is driven by an electric motor, it usually is not beneficial to maintain battery power past the time the air supply is depleted. All instrument needs required for an orderly shutdown should be considered. Another consideration is the response time for the operations personnel. Minimum UPS design backup time should be capable of providing a safe facility shutdown. Back-up power is most economically provided by "floating" the batteries across the output of the DC power supplies. The circuits should be designed to prevent over-charging or under-charging of the batteries as well as to prevent damage to the regulator circuits when the AC input is disrupted. If the AC input power must be backed up, batteries are used to feed an inverter which transforms DC power into AC power of the proper voltage and frequency. Static switches are available to automatically switch the power supply input from the normal AC line to the inverter when AC line power is lost. Newer UPS systems configurations (Line Interactive, Standby-Ferro-resonant and Double Conversion On-Line) automatically switch the AC loads without manual transfer switches. Each design has its benefits and limitations. The double conversion are becoming popular for their higher efficiency and seismic ratings. UPSs are available in Single Phase and 3 Phase configurations. Single phase 240/120 VAC, 3-wire is the most common. A manual backup bypass transfer switch should be considered in the design to allow for UPS maintenance with no power interruption

FIG. 4-4

Example Reclosure Gear Operation for Power Outages of Commercial Utilities

Reclosure Attempt	Time	% Successful
First Reclosure	0.1 sec or less	84
Second Reclosure	15-45 sec	10
Third Reclosure	120 sec	1.5
Manual Intervention	–	4.5

Documents
Document Sharing Hub
Full document details: GPSA M04 2016

to the loads. Manufacturer recommendations for environmental requirements must be observed to assure reliability of electronic power supplies, static switches, etc. Regular maintenance of battery systems is mandatory since batteries have a limited life-span compared to other electronic components and terminal corrosion may cause problems. Proper sizing of the UPS should consider the connected loads in VA (volt-amperes), future connected loads (25%–30% spare capacity) and efficiency of the UPS. Over sizing the UPS system may not be the best design. UPS's are less efficient (as a percentage of capacity) when operating at lower loads. Standby generators may be required in some installations to permit instrument operations to continue beyond the time limit of the battery system. Additional information on standby power systems and power load calculations is included in Section 18 (Fig. 18-28).

SENSING DEVICES

Some of the more common types of sensing devices for the measurement of process variables are described as follows:

Pressure Sensors

Manometer (Fig. 4-5) — Two different pressures are applied to two separate openings in a transparent vessel containing a liquid. The difference in the heights of the liquid is used as a measure of the differential pressure. This difference should be corrected for temperature and gravity of the liquid in the manometer (usually either water or mercury). Pressures are often expressed in units such as "inches of water" or "millimeters of mercury."

Bourdon tubes (Fig. 4-6) — A Bourdon tube is a metallic coil constructed from a metal tube having the desired elastic quality and corrosion resistance. The tendency of the tube to

FIG. 4-5
Types of Manometers

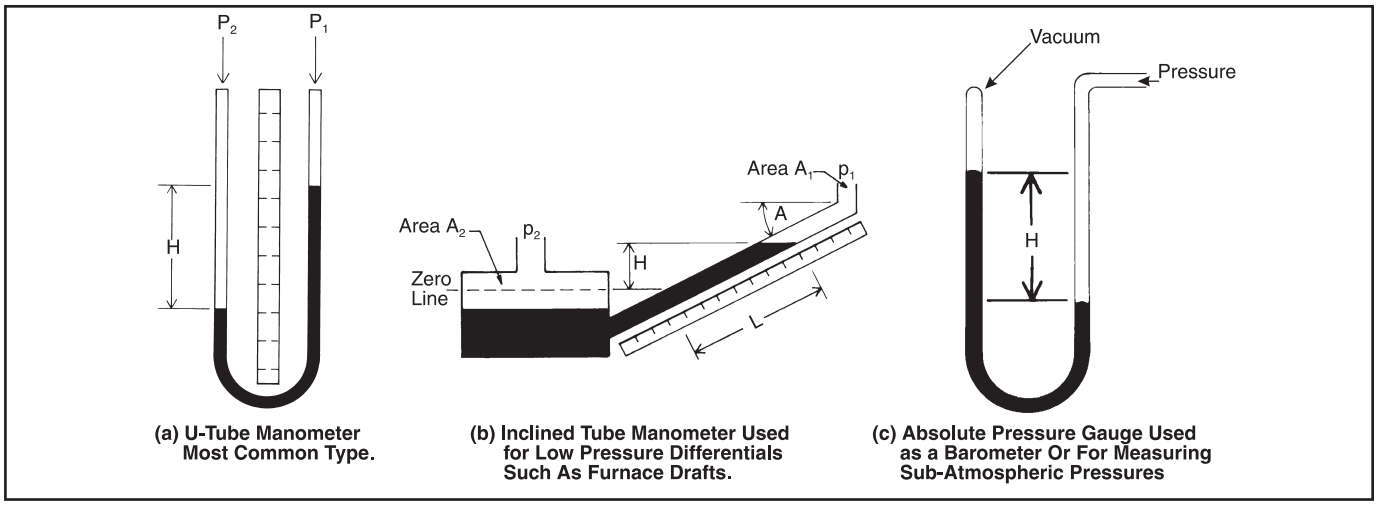

(a) U-Tube Manometer Most Common Type.

(b) Inclined Tube Manometer Used for Low Pressure Differentials Such As Furnace Drafts.

(c) Absolute Pressure Gauge Used as a Barometer Or For Measuring Sub-Atmospheric Pressures

FIG. 4-6
Types of Bourdon Tubes

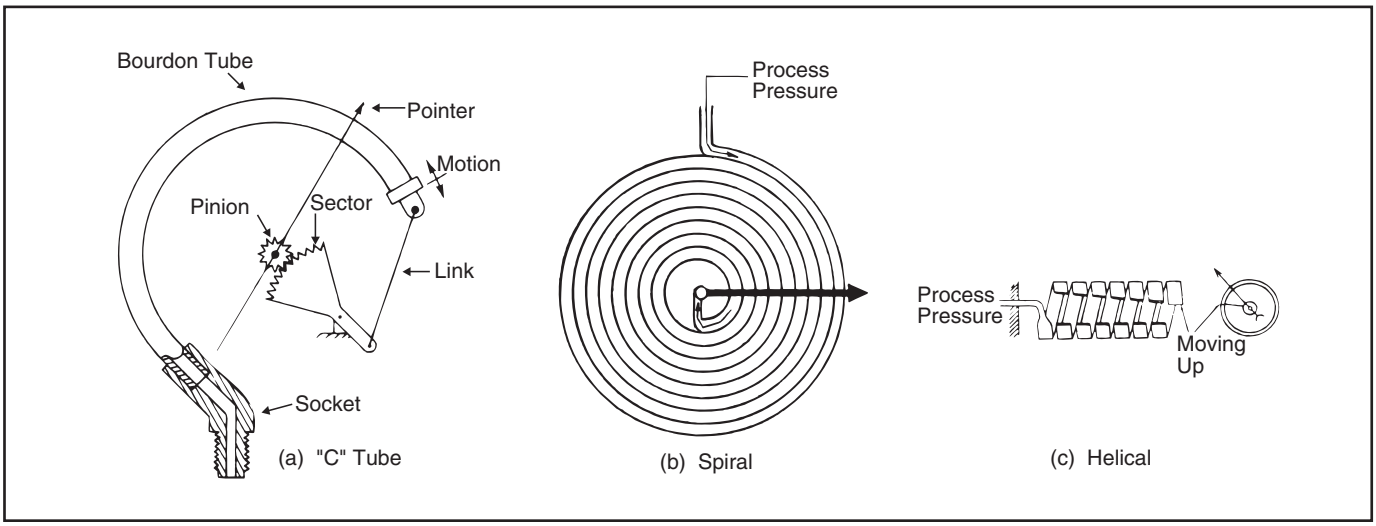

Documents
Document Sharing Hub
Full document details: GPSA M04 2016

straighten under pressure causes a mechanical linkage to move a pointer or initiate pneumatic or electronic transmission of the measured pressure. Dampeners should be used where pulsation is a problem. Condensate traps should be used upstream of the device in steam service. The pressure indicated is "gauge" pressure which is relative to that of the surroundings. Bourdon gauges are also available as "compound" types which indicate vacuum as well as positive pressure. This design is the most common and offers very high pressure and burst ratings.

Bellows (Fig. 4-7) — A tubular device with pleated sections somewhat like an accordion. It is flexible along its axis and lengthens or shortens according to the applied pressure. The bellows is usually used in low pressure or vacuum service but types are available for use with high pressures (up to several thousand kPa). Typical diameters range from 10-300 mm. They are often used in force-balance type transmitters and other applications where small displacements are required. Like the Bourdon tube, it indicates pressures as "gauge" or relative to its surroundings.

Diaphragm (Fig. 4-8) — A flat or curved seal with a link attached to an indicator or transmission device. A diaphragm may have its own deflection properties such as with a metallic type or it may be attached to a spring or other elastic member such as with non-metallic diaphragms.

Electrical Pressure Transducers

The primary sensing element of many electrical pressure transducers usually takes the form of a Bourdon tube, bellows, or diaphragm to generate a movement which is transmitted to a strain gauge. A strain gauge is a device using resistance wire connected in a Wheatstone bridge configuration to generate an electrical signal proportional to the movement and hence proportional to the process variable being measured. Other types of electrical pressure transducers use properties of inductance, capacitance, or magnetic coupling to convert a pressure measurement to an electrical signal.

FIG. 4-7
Types of Bellows

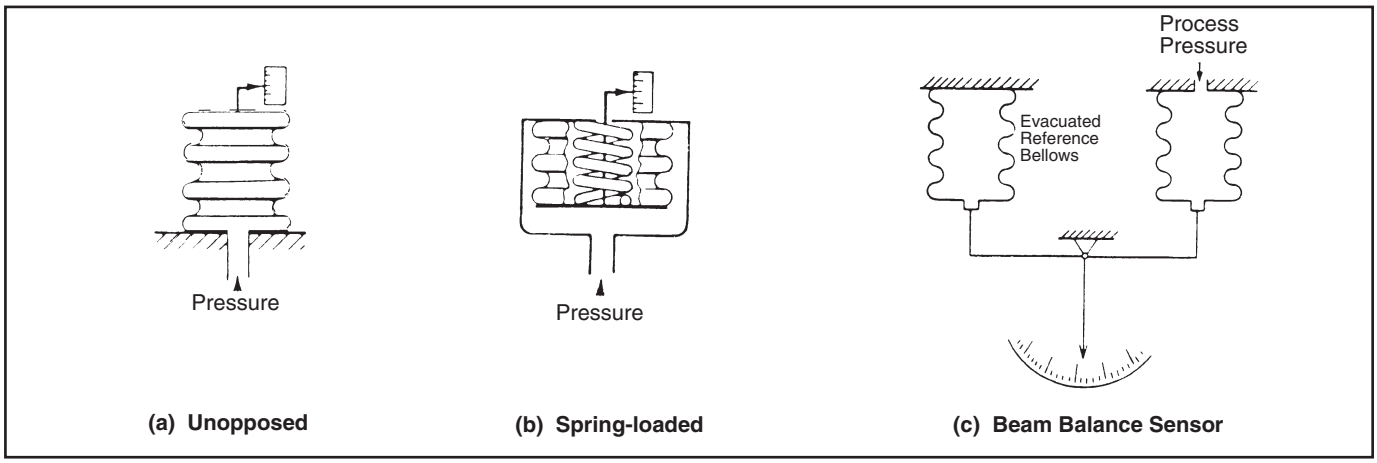

FIG. 4-8
Diaphragm Pressure Elements

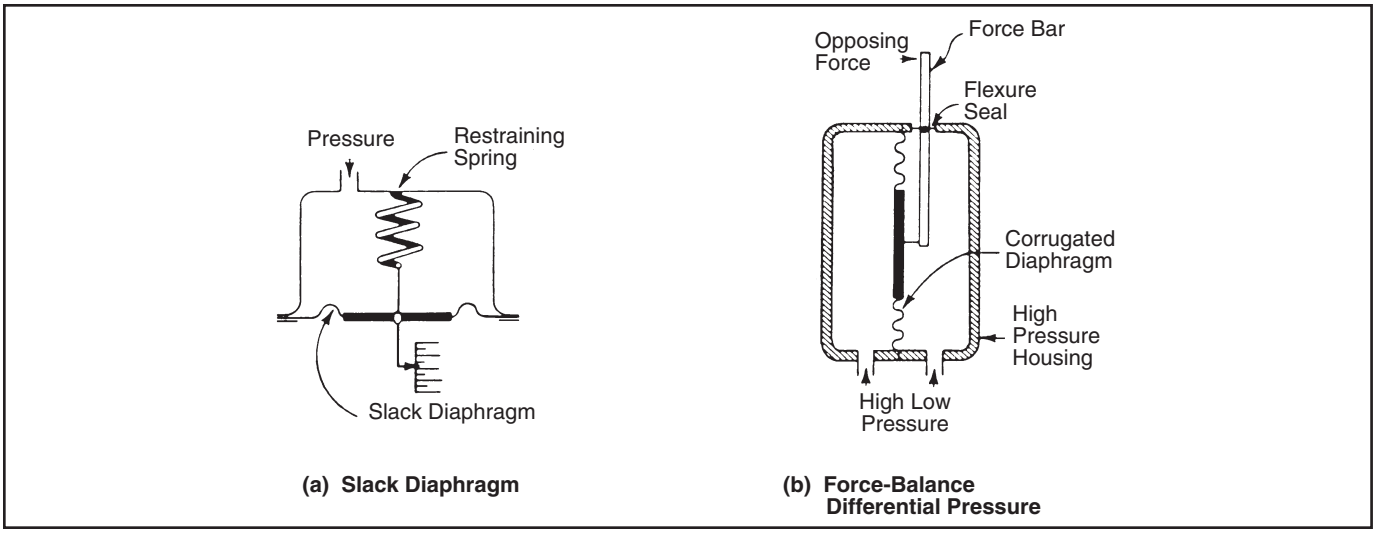

Documents
Document Sharing Hub
Full document details: GPSA M04 2016

Level Sensors

Gauge glass (Fig. 4-9) — This is the most commonly used visual process-level device. Gauge glasses are generally classified as either transparent or reflex types. A transparent gauge glass consists of either a glass tube or an arrangement of flat glass plates in some type of holder. Since the process fluid level is viewed directly, the transparent gauge glass is normally used with opaque fluids. The reflex type has reflecting prisms to aid in viewing transparent fluids. Caution should be observed when handling and installing these and/or any tempered glass instrument. Scratches or chips can reduce the strength of the glass and cause safety problems.

Chain and tape float gauges (Fig. 4-10) — Used in large, unpressurized storage tanks where the entire full-to-empty range must be measured.

Lever and shaft float gauges (Fig. 4-11) — Used on either unpressurized or pressurized vessels where only a small range of level must be measured. The range of measurement is determined by the length of the float arm, but usually is between a few millimeters and a few meters.

Displacer level measuring device (Fig. 4-12) — One of the most frequently used level measuring devices is the torque tube displacer. It is attached to the free end of a torque tube which has elastic properties that permit it to twist as the displacer tries to float. This slight turning of the free end of the torque tube is connected to an indicator or transmitter. Torque tube displacement gauges are normally limited to level spans of three meters.

Head-pressure level gauges (Fig. 4-13) — The true level of a liquid can be determined by dividing the measured hydrostatic head by the density of the liquid. This method requires a knowledge of the densities of all phases of the liquid. Some of these methods are: pressure gauge, bubble tube, and differential pressure measurement. The bubbler (Fig. 4-13a) is used at vacuum and low pressures and is especially good for services such as molten sulfur and dirty liquids. In "boiling-liquid" service (Fig. 4-13b), a condensate trap must be used on the vapor leg. The level of trapped condensate in the vapor leg will usually be different than the vessel liquid level, requiring compensation of the transmitter.

Electrical type level gauges and switches (Fig. 4-14) — Two common types of level gauges are the float-magnetic gauge configuration and the conductive type shown in Fig. 4-14. Slight tension on the tape reel permits the follower magnet to track the float at the liquid level in the device in Fig. 4-14a. The position of the reel represents the level and is either connected to an indicating device or a transmitter. The device shown in Fig. 4-14b illustrates the use of a conductive fluid for high and low level alarm indication.

FIG. 4-9
Flat Glass Gauge Glasses

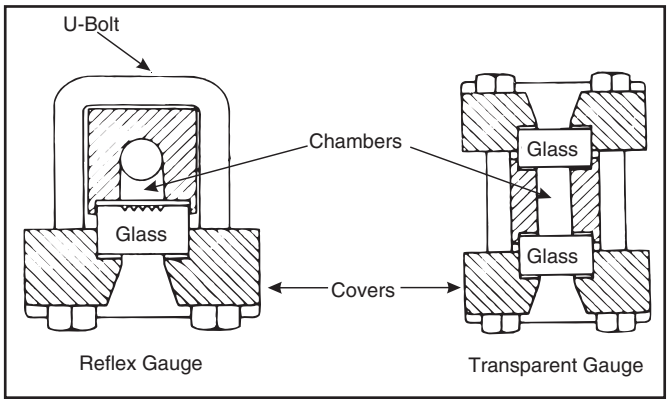

FIG. 4-10
Chain and Tape Float Gauge

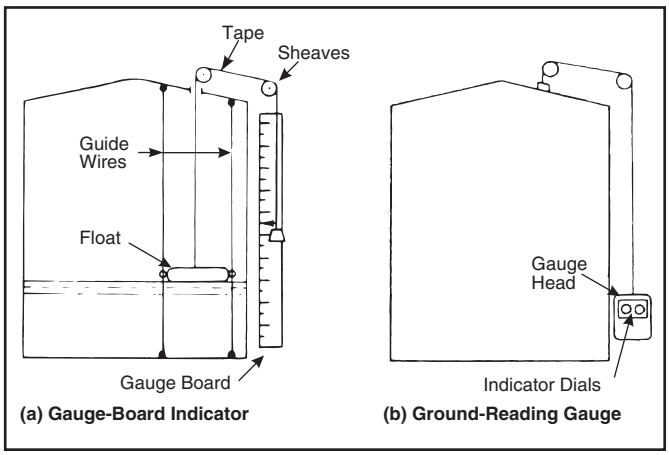

FIG. 4-11
Lever and Shaft Float Gauge

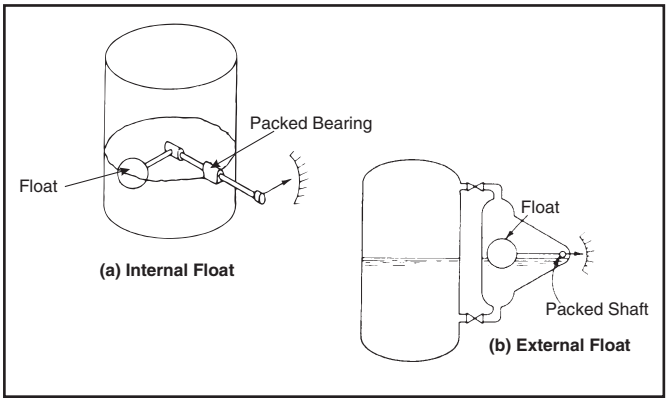

FIG. 4-12
Displacer Level Measuring Device

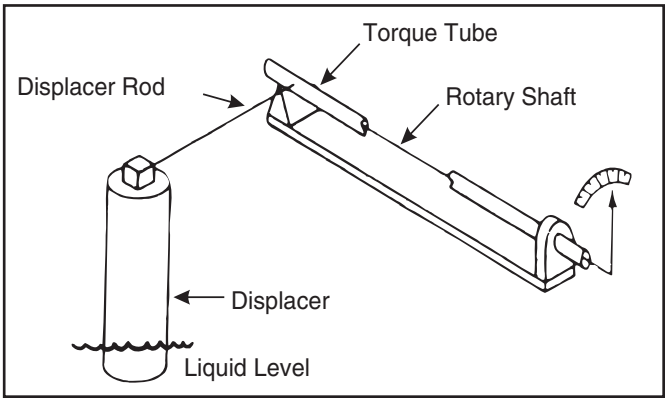

Documents
Document Sharing Hub
Full document details: GPSA M04 2016

Capacitance probes (not illustrated) — A continuous method of level measurement based on electrical properties. This method uses an electrode placed inside a vessel (or in a protective shell inside the vessel). The capacitance between the electrode and the wall of the vessel or shell varies as the dielectric constant varies. The dielectric in this case is the fluid, hence the capacitance varies in proportion to the liquid level. This capacitance is then measured, and converted to a level measurement to be indicated or transmitted.

Magnetostrictive level transmitter (not illustrated) — This continuous level measurement technology is noted for being highly accurate, repeatable, low maintenance and reasonable cost. The main components for this type of level transmitter are the electronics head, the stainless steel sensor probe containing a magnetostrictive wire wave guide and a float with permanent magnets. The magnetic float travels alongside the sensor probe. The transmitter sensor probe assembly is installed vertically into a vessel or bridle assembly. A current pulse is transmitted down the wire wave guide and reaches the magnetic field of the float. The current pulse and float magnetic fields interfere with each other and produce a torsional wave that is reflected back to the electronics head. The transit time for this reflection is directly proportional to the distance or level of the fluid being measured. These sensor and float designs can be applied in processes up to 21 000 kPa (ga) and 425 °C with sensor lengths over 21 meters. The 4-20 mA signal output is a transmitter standard along with a variety of communication protocols such as; FOUNDATION™ field bus, PROFIBUS, HART and other proprietary communications. These are a few installation considerations:

- For light hydrocarbons, the floats are larger diameter and may require wide flange connections.
- Accurate dimensions for the sensor insertion lengths are required at time of purchase.

FIG. 4-13

Head Pressure Level Gauges

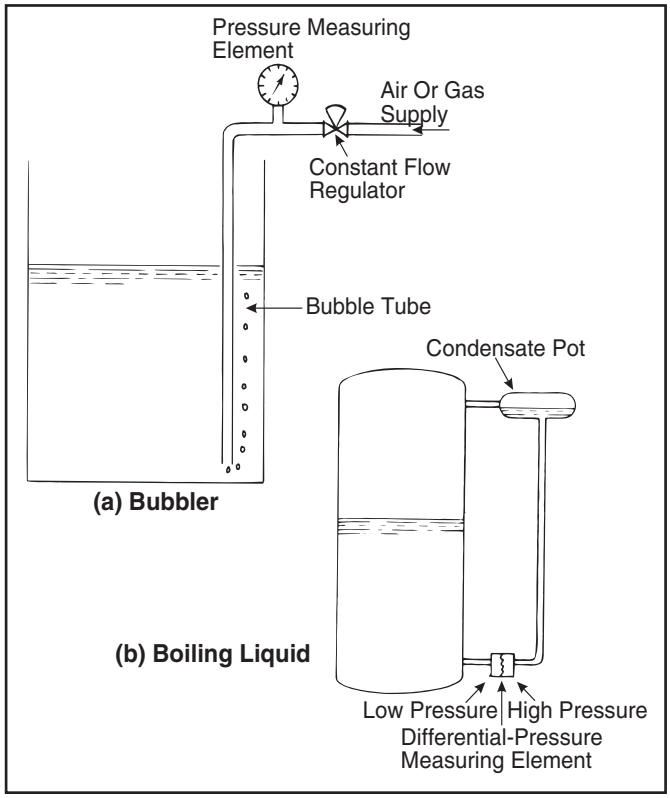

FIG. 4-14

Electrical Level Gauges/Switches

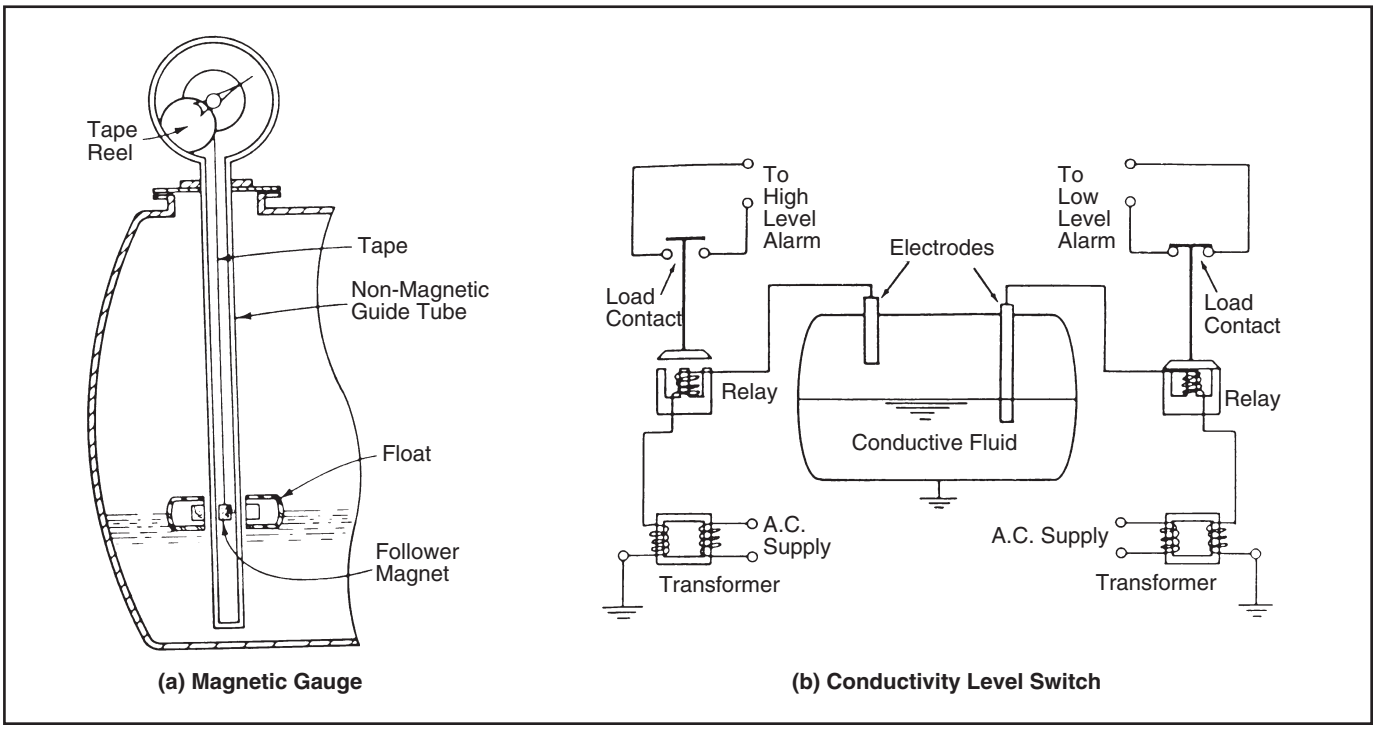

Documents
Document Sharing Hub
Full document details: GPSA M04 2016

- Long sensor lengths in turbulent service may require fastening of the loose end of the sensor.
- For multiple product level service, a float may have different buoyancy, causing level shift.
- A float repair or replacement requires the vessel depressurized for assembly removal.
- Interface levels of fluids (with different specific gravities) can be measured by using a float with the properly designed buoyancy.

Guided wave radar level transmitter (not illustrated) — Radar level measurement technology comes in two basic technologies, non-contact and contact. The contact type, or guided wave radar (GWR) level transmitter is most prevalent in the natural gas industry. The main components for this type of level transmitter are the electronics head (transmitter/sensor) that generates a microwave pulse and the stainless steel probe that is inserted into the vessel and "guides" the pulse to the vapor/fluid interface. Four types of sensor probes are available: single rod, single flexible cable, twin flexible cable and coaxial tube. The transmitter/sensor generates a microwave pulse along the sensor probe. When the pulse reaches the vapor/fluid interface, it is reflected back to the sensor. The power level of the reflected pulse is dependent on the dielectric constant of the fluid. The transit time for this reflected pulse is directly proportional to the distance or level of the fluid being measured. For hydrocarbon liquids, the dielectric constant is very low (1.3-1.5) requiring special probe consideration. The coaxial probe has been noted to be successful in this application. The GWR level transmitter shows very little effects from process density, temperature and pressure changes. The probe assemblies are typically installed vertically into a vessel or bridle assembly. Probes are available that can be installed in horizontal connections. These sensor designs can be applied in processes up to 34 500 kPa (ga) and –129 °C to +370 °C with sensor lengths to 6 meters. The 4-20 mA signal output is a transmitter standard along with a variety of communication protocols such as; FOUNDATION™ field bus, PROFIBUS, HART and other proprietary communications. These are a few installation considerations:

- For light hydrocarbons, a coaxial tube or twin probe should be considered.
- Sensor insertion lengths are required at time of purchase, but can be field adjusted.
- Long sensor lengths in turbulent service may require fastening of the loose end of the sensor.
- Interface level (multiple fluids) service is attainable with careful specification.
- A probe repair or replacement requires the vessel depressurized for assembly removal. Some manufacturers allow the electronic head replacement without vessel depressurization.
- Foaming liquids can cause false level indication.
- When placed in "dirty" service, bridging of debris and paraffin buildup on coax and twin probes can cause false indication.
- Consult manufacturer data regarding probe installation clearances and proximity to other metal objects/ vessel walls.

Other methods — Some of the other level detection methods use principles of:

1. Absorption of nuclear radiation as in a gamma gauge.
2. Absorption of ultrasonic waves.
3. Viscosity of the liquid.
4. Thermal conductivity and expansion.

Temperature Sensors

Thermocouples — An ordinary thermocouple consists of two different kinds of wires (dissimilar metals) joined together at one end to form the measuring or "hot" junction. Where the free ends are connected to the measuring instrument, a reference or "cold" junction is formed. The millivolt readings measured by the instrument represent the difference in the temperatures of the two junctions and can be converted to temperature by various methods using conversion data from thermocouple tables. The reference temperatures normally used to generate thermocouple tables are 0 °C and 20 °C. Fig. 4-15 shows some of the common thermocouple types, their usable temperature ranges, and the materials of construction.

Thermocouples used for process measurements are usually protected by a thermowell. The mass of the thermowell should be kept to a minimum in the interest of faster response. The thermocouple must be in thermal contact with the thermowell. This is accomplished by the use of a thermally conductive lubricant or physical contact between the thermocouple and the well. In many measurement and control applications, electrical grounding of the thermocouple at the measurement point must be avoided to prevent a path for current ground loops.

In applications other than a laboratory environment, maintaining a reference junction temperature is not practical. Therefore, the reference junction is usually at or a part of the measuring instrument where the reference temperature can be measured and compensated for the measurement circuits. Various series arrangements of thermocouples may be made to obtain differential temperatures or temperature averages. To prevent the creation of cold junctions in a thermocouple circuit, it is imperative to use thermocouple extension wire of the same material type as the thermocouple.

Qualified personnel may check indicating or recording temperature devices measuring thermocouple potentials using portable equipment compatible with the thermocouple and with compensating circuitry identical to the primary device. The use of incompatible equipment could result in erroneous results, especially in low temperature applications. At low temperatures, extreme care must be taken to eliminate sources of moisture in thermocouple installations. Common properties for different types of thermocouples are given in Fig. 4-15. Conversion tables for converting millivolts to temperatures can be found in NBS Circular #561, or obtained from thermocouple suppliers for common types. Types J, K and T are most commonly used in the processing industries.

Resistance thermometers — These are often called RTD's for "Resistance Temperature Devices." Since the resistance of metals changes as the temperature changes, a resistance thermometer can be constructed using this principle. The metals that fit a near linear resistance temperature relationship requirement best are platinum, copper, and nickel. An accurate resistance measuring device utilizing a Wheatstone bridge is calibrated in units of temperature rather than resistance. RTD's are used in applications where faster responses and greater accuracies are required than may be obtained with thermocouples. Also RTD's have a fairly high electrical output which is suitable for direct connection to indicators, controllers,

Documents
Document Sharing Hub
Full document details: GPSA M04 2016