IEC 60034-1

Edition 13.0 2017-05
REDLINE VERSION

INTERNATIONAL STANDARD

colour inside

Rotating electrical machines –
Part 1: Rating and performance

IEC 60034-1:2017-05 RLV(en)

Documents
Document Sharing Hub

Full document details: IEC 60034-1 2017 RLV

THIS PUBLICATION IS COPYRIGHT PROTECTED

Copyright © 2017 IEC, Geneva, Switzerland

All rights reserved. Unless otherwise specified, no part of this publication may be reproduced or utilized in any form or by any means, electronic or mechanical, including photocopying and microfilm, without permission in writing from either IEC or IEC's member National Committee in the country of the requester. If you have any questions about IEC copyright or have an enquiry about obtaining additional rights to this publication, please contact the address below or your local IEC member National Committee for further information.

IEC Central Office
3, rue de Varembé
CH-1211 Geneva 20
Switzerland

Tel.: +41 22 919 02 11
info@iec.ch
www.iec.ch

About the IEC
The International Electrotechnical Commission (IEC) is the leading global organization that prepares and publishes International Standards for all electrical, electronic and related technologies.

About IEC publications
The technical content of IEC publications is kept under constant review by the IEC. Please make sure that you have the latest edition, a corrigenda or an amendment might have been published.

IEC Catalogue - webstore.iec.ch/catalogue
The stand-alone application for consulting the entire bibliographical information on IEC International Standards, Technical Specifications, Technical Reports and other documents. Available for PC, Mac OS, Android Tablets and iPad.

IEC publications search - webstore.iec.ch/advsearchform
The advanced search enables to find IEC publications by a variety of criteria (reference number, text, technical committee,…). It also gives information on projects, replaced and withdrawn publications.

IEC Just Published - webstore.iec.ch/justpublished
Stay up to date on all new IEC publications. Just Published details all new publications released. Available online and also once a month by email.

Electropedia - www.electropedia.org
The world's leading online dictionary of electronic and electrical terms containing 21 000 terms and definitions in English and French, with equivalent terms in 16 additional languages. Also known as the International Electrotechnical Vocabulary (IEV) online.

IEC Glossary - std.iec.ch/glossary
67 000 electrotechnical terminology entries in English and French extracted from the Terms and Definitions clause of IEC publications issued since 2002. Some entries have been collected from earlier publications of IEC TC 37, 77, 86 and CISPR.

IEC Customer Service Centre - webstore.iec.ch/csc
If you wish to give us your feedback on this publication or need further assistance, please contact the Customer Service Centre: sales@iec.ch.

Documents
Document Sharing Hub

Full document details: IEC 60034-1 2017 RLV

IEC 60034-1

Edition 13.0 2017-05
REDLINE VERSION

INTERNATIONAL STANDARD

colour inside

Rotating electrical machines –
Part 1: Rating and performance

INTERNATIONAL
ELECTROTECHNICAL
COMMISSION

ICS 29.160.01

ISBN 978-2-8322-4323-7

Warning! Make sure that you obtained this publication from an authorized distributor.

® Registered trademark of the International Electrotechnical Commission

Documents
Document Sharing Hub

Full document details: IEC 60034-1 2017 RLV

CONTENTS

FOREWORD 7
1 Scope 10
2 Normative references 10
3 Terms and definitions 12
4 Duty 16
4.1 Declaration of duty 16
4.2 Duty types 17
4.2.1 Duty type S1 – Continuous running duty 17
4.2.2 Duty type S2 – Short-time duty 18
4.2.3 Duty type S3 – Intermittent periodic duty 19
4.2.4 Duty type S4 – Intermittent periodic duty with starting 20
4.2.5 Duty type S5 – Intermittent periodic duty with electric braking 21
4.2.6 Duty type S6 – Continuous operation periodic duty 22
4.2.7 Duty type S7 – Continuous operation periodic duty with electric braking 23
4.2.8 Duty type S8 – Continuous operation periodic duty with related load/speed changes 24
4.2.9 Duty type S9 – Duty with non-periodic load and speed variations 25
4.2.10 Duty type S10 – Duty with discrete constant loads and speeds 26
5 Rating 29
5.1 Assignment of rating 29
5.2 Classes of rating 29
5.2.1 Rating for continuous running duty 29
5.2.2 Rating for short-time duty 29
5.2.3 Rating for periodic duty 29
5.2.4 Rating for non-periodic duty 29
5.2.5 Rating for duty with discrete constant loads and speeds 30
5.2.6 Rating for equivalent loading 30
5.3 Selection of a class of rating 30
5.4 Allocation of outputs to class of rating 30
5.5 Rated output 31
5.5.1 DC generators 31
5.5.2 AC generators 31
5.5.3 Motors 31
5.5.4 Synchronous condensers 31
5.6 Rated voltage 31
5.6.1 DC generators 31
5.6.2 AC generators 31
5.7 Co-ordination of voltages and outputs 31
5.8 Machines with more than one rating 32
6 Site ~~operating~~ conditions 32
6.1 General 32
6.2 Altitude 32
6.3 Maximum ambient air temperature 32
6.4 Minimum ambient air temperature 32
6.5 Water coolant temperature 33
6.6 Standstill, storage and transport 33

Documents
Document Sharing Hub
Full document details: IEC 60034-1 2017 RLV

6.7 Purity of hydrogen coolant ... 33
7 Electrical operating conditions ... 33
7.1 Electrical supply ... 33
7.2 Form and symmetry of voltages and currents ... 34
7.2.1 AC motors ... 34
7.2.2 AC generators ... 34
7.2.3 Synchronous machines ... 35
7.2.4 DC motors supplied from static power converters ... 36
7.3 Voltage and frequency variations during operation ... 37
7.4 Three-phase a.c. machines operating on unearthed systems ... 39
7.5 Voltage (peak and gradient) withstand levels ... 40
8 Thermal performance and tests ... 40
8.1 Thermal class ... 40
8.2 Reference coolant ... 40
8.3 Conditions for thermal tests ... 41
8.3.1 Electrical supply ... 41
8.3.2 Temperature of machine before test ... 41
8.3.3 Temperature of coolant ... 42
8.3.4 Measurement of coolant temperature during test ... 42
8.4 Temperature rise of a part of a machine ... 42
8.5 Methods of measurement of temperature ... 42
8.5.1 General ... 42
8.5.2 Resistance method ... 43
8.5.3 Embedded temperature detector (ETD) method ... 43
8.5.4 Thermometer method ... 43
8.6 Determination of winding temperature ... 43
8.6.1 Choice of method ... 43
8.6.2 Determination by resistance method ... 44
8.6.3 Determination by ETD method ... 45
8.6.4 Determination by thermometer method ... 46
8.7 Duration of thermal tests ... 46
8.7.1 Rating for continuous running duty ... 46
8.7.2 Rating for short-time duty ... 46
8.7.3 Rating for periodic duty ... 46
8.7.4 Ratings for non-periodic duty and for duty with discrete constant loads ... 47
8.8 Determination of the thermal equivalent time constant for machines of duty type S9 ... 47
8.9 Measurement of bearing temperature ... 47
8.10 Limits of temperature and of temperature rise ... 47
8.10.1 General ... 47
8.10.2 Indirect cooled windings ... 48
8.10.3 Direct cooled windings ... 52
8.10.4 Adjustments to take account of hydrogen purity on test ... 53
8.10.5 Permanently short-circuited windings, magnetic cores and all structural components (other than bearings) whether or not in contact with insulation ... 53
8.10.6 Commutators and sliprings, open or enclosed and their brushes and brushgear ... 53
9 Other performance and tests ... 55

AVA Documents
Document Sharing Hub
Full document details: IEC 60034-1 2017 RLV

9.1 Routine tests ... 55
9.2 Withstand voltage test ... 56
9.3 Occasional excess current ... 59
9.3.1 General ... 59
9.3.2 Generators ... 59
9.3.3 Motors (except commutator motors and permanent magnet motors) ... 59
9.3.4 Commutator machines ... 59
9.4 Momentary excess torque for motors ... 59
9.4.1 Polyphase induction motors and d.c. motors ... 59
9.4.2 Polyphase synchronous motors ... 60
9.4.3 Other motors ... 60
9.5 Pull-up torque ... 60
9.6 Safe operating speed of cage induction motors ... 60
9.7 Overspeed ... 61
9.8 Short-circuit current for synchronous machines ... 62
9.9 Short-circuit withstand test for synchronous machines ... 62
9.10 Commutation test for commutator machines ... 63
9.11 Total harmonic distortion (*THD*) for synchronous machines ... 63
9.11.1 General ... 63
9.11.2 Limits ... 63
9.11.3 Tests ... 63
10 Rating plates ... 63
10.1 General ... 63
10.2 Marking ... 64
11 Miscellaneous requirements ... 65
11.1 Protective earthing of machines ... 65
11.2 Shaft-end key(s) ... 67
12 Tolerances ... 67
12.1 General ... 67
12.2 Tolerances on values of quantities ... 67
13 Electromagnetic compatibility (EMC) ... 69
13.1 General ... 69
13.2 Immunity ... 69
13.2.1 Machines not incorporating electronic circuits ... 69
13.2.2 Machines incorporating electronic circuits ... 70
13.3 Emission ... 70
~~13.3.1 Machines without brushes ...~~
~~13.3.2 Machines with brushes ...~~
13.4 Immunity tests ... 70
13.5 Emission ~~test~~ measurements ... 70
~~13.5.1 Machines without brushes ...~~
~~13.5.2 Machines with brushes ...~~
14 Safety ... 71
Annex A (informative) Guidance for the application of duty type S10 and for establishing the value of relative thermal life expectancy *TL* ... 72
Annex B (informative) Electromagnetic compatibility (EMC) limits ... 73
Bibliography ... 74

Documents
Document Sharing Hub
Full document details: IEC 60034-1 2017 RLV

Figure 1 – Continuous running duty – Duty type S1 18
Figure 2 – Short-time duty – Duty type S2 19
Figure 3 – Intermittent periodic duty – Duty type S3 20
Figure 4 – Intermittent periodic duty with starting – Duty type S4 21
Figure 5 – Intermittent periodic duty with electric braking – Duty type S5 22
Figure 6 – Continuous operation periodic duty – Duty type S6 23
Figure 7 – Continuous operation periodic duty with electric braking – Duty type S7 24
Figure 8 – Continuous operation periodic duty with related load/speed changes – Duty type S8 25
Figure 9 – Duty with non-periodic load and speed variations – Duty type S9 26
Figure 10 – Duty with discrete constant loads – Duty type S10 28
Figure 11 – Voltage and frequency limits for generators 39
Figure 12 – Voltage and frequency limits for motors 39

Table 1 – Preferred voltage ratings 32
Table 2 – Unbalanced operating conditions for synchronous machines 36
Table 3 – *CCC* symbol designation 37
Table 4 – Primary functions of machines 38
Table 5 – Reference coolant (see also Table 11) 41
Table 6 – Time interval 45
Table 7 – Measuring points 47
Table 8 – Limits of temperature rise of windings indirectly cooled by air 49
Table 9 – Limits of temperature rise of windings indirectly cooled by hydrogen 50
Table 10 – Adjustments to limits of temperature rise at the operating site of indirect cooled windings to take account of non-reference operating conditions and ratings 51
Table 11 – Assumed maximum ambient temperature 52
Table 12 – Adjusted limits of temperature rise at the test site ($\Delta\theta_T$) for windings indirectly cooled by air to take account of test site operating conditions 53
Table 13 – Limits of temperature of directly cooled windings and their coolants 54
Table 14 – Adjustments to limits of temperature at the operating site for windings directly cooled by air or hydrogen to take account of non-reference operating conditions and ratings 54
Table 15 – Adjusted limits of temperature at the test site θ_T for windings directly cooled by air to take account of test site operating conditions 55
Table 16 – Minimum ~~schedule of~~ routine tests for machines assembled and tested in the factory of the manufacturer 56
Table 17 – Withstand voltage tests 57
Table 18 – Maximum safe operating speed (min^{-1}) of three-phase single-speed cage induction motors for voltages up to and including 1 000 V 61
Table 19 – Overspeeds 62
Table 20 – Cross-sectional areas of earthing conductors 67
Table 21 – Schedule of tolerances on values of quantities 68
Table B.1 – Electromagnetic emission limits ~~for machines without brushes~~ per CISPR 11 Class B Group 1 73

AVA Documents
Document Sharing Hub
Full document details: IEC 60034-1 2017 RLV

Table B.2 – Electromagnetic emission limits ~~for machines with brushes~~ per CISPR 11 Class A Group 1 73

Documents
Document Sharing Hub

Full document details: IEC 60034-1 2017 RLV

INTERNATIONAL ELECTROTECHNICAL COMMISSION

ROTATING ELECTRICAL MACHINES –

Part 1: Rating and performance

FOREWORD

1) The International Electrotechnical Commission (IEC) is a worldwide organization for standardization comprising all national electrotechnical committees (IEC National Committees). The object of IEC is to promote international co-operation on all questions concerning standardization in the electrical and electronic fields. To this end and in addition to other activities, IEC publishes International Standards, Technical Specifications, Technical Reports, Publicly Available Specifications (PAS) and Guides (hereafter referred to as "IEC Publication(s)"). Their preparation is entrusted to technical committees; any IEC National Committee interested in the subject dealt with may participate in this preparatory work. International, governmental and non-governmental organizations liaising with the IEC also participate in this preparation. IEC collaborates closely with the International Organization for Standardization (ISO) in accordance with conditions determined by agreement between the two organizations.
2) The formal decisions or agreements of IEC on technical matters express, as nearly as possible, an international consensus of opinion on the relevant subjects since each technical committee has representation from all interested IEC National Committees.
3) IEC Publications have the form of recommendations for international use and are accepted by IEC National Committees in that sense. While all reasonable efforts are made to ensure that the technical content of IEC Publications is accurate, IEC cannot be held responsible for the way in which they are used or for any misinterpretation by any end user.
4) In order to promote international uniformity, IEC National Committees undertake to apply IEC Publications transparently to the maximum extent possible in their national and regional publications. Any divergence between any IEC Publication and the corresponding national or regional publication shall be clearly indicated in the latter.
5) IEC itself does not provide any attestation of conformity. Independent certification bodies provide conformity assessment services and, in some areas, access to IEC marks of conformity. IEC is not responsible for any services carried out by independent certification bodies.
6) All users should ensure that they have the latest edition of this publication.
7) No liability shall attach to IEC or its directors, employees, servants or agents including individual experts and members of its technical committees and IEC National Committees for any personal injury, property damage or other damage of any nature whatsoever, whether direct or indirect, or for costs (including legal fees) and expenses arising out of the publication, use of, or reliance upon, this IEC Publication or any other IEC Publications.
8) Attention is drawn to the Normative references cited in this publication. Use of the referenced publications is indispensable for the correct application of this publication.
9) Attention is drawn to the possibility that some of the elements of this IEC Publication may be the subject of patent rights. IEC shall not be held responsible for identifying any or all such patent rights.

This redline version of the official IEC Standard allows the user to identify the changes made to the previous edition. A vertical bar appears in the margin wherever a change has been made. Additions are in green text, deletions are in strikethrough red text.

Documents
Document Sharing Hub

Full document details: IEC 60034-1 2017 RLV

International Standard IEC 60034-1 has been prepared by IEC technical committee 2: Rotating machinery.

This thirteenth edition cancels and replaces the twelfth edition published in 2010. It constitutes a technical revision.

The main technical changes with regard to the previous edition are as follows:

Clause or subclause	Change
3.25	Shorter time to thermal equilibrium
5.5.2	Note on P-Q capability diagram for synchronous generators
6.4	Clarification added that other conditions can be agreed on
6.6	Clarification added that standstill is explicitly included; note added
7.1	Clarification on bus transfer or fast reclosing
	Capability to withstand impulse voltages in case of machines connected to a U converter
7.2.4	New Table 3 for identification code
7.3	Table 4 corrected to reflect current scope of IEC 60034-3
7.5	Voltage withstand level for machines connected to a converter
8.3.4	Measurement of ambient air temperature in case of open machines
8.6.3.4	Notes on ETD in the end windings of high voltage machines and on ETD use to monitor strand blockage in case of directly liquid cooled windings
8.10	Clarification on temperature limit
	Clarification on temperature difference between method R and method ETD
	Clarification that temperature limit acc. to method R must always be kept
	Note on measured temperature limits between methods R and ETD
	Table 8 and Table 11 extended incorporating thermal class 200 (N)
	Line 4c) of Table 8 restricted to field windings of DC machines
	Temperature limits in Table 8 changed according to 2/1737/DC and the comments received on this document
	Physically correct formula in Table 10, item 1b
9.1	Clarification on machines that are subject to routine testing
9.2	Separate withstand voltage testing of phases
	Clarification on frequency and time instant for withstand voltage test
	Note on leakage current during withstand voltage test
	Note referring to IEC 60027
10.2	Information on IVIC on rating plate or in documentation
	Clarification added to item f
	IC code and design letter for locked-rotor apparent power on rating plate
11.1	Clarification on cross-sectional area of earthing conductor for generators
	Note on grounding for small machines added
12.2	Tolerance on field current of synchronous machines added
	Tolerance on power factor applies also for PM synchronous machines operated directly at the lines
	Contradiction between tolerances on efficiency and on losses clarified
13.1	Changed as proposed by ACEC
	Note for large generators added
13.3	Changed as proposed by ACEC

Documents
Document Sharing Hub

Full document details: IEC 60034-1 2017 RLV

Clause or subclause	Change
13.5	Changed as proposed by ACEC
Annex B	DC power supply added

The text of this standard is based on the following documents:

FDIS	Report on voting
2/1857/FDIS	2/1863/RVD

Full information on the voting for the approval of this standard can be found in the report on voting indicated in the above table.

This publication has been drafted in accordance with the ISO/IEC Directives, Part 2.

A list of all parts of the IEC 60034 series, published under the general title *Rotating electrical machines,* can be found on the IEC website.

NOTE A table of cross-references of all IEC TC 2 publications can be found in the IEC TC 2 dashboard on the IEC website.

The committee has decided that the contents of this publication will remain unchanged until the stability date indicated on the IEC website under "http://webstore.iec.ch" in the data related to the specific publication. At this date, the publication will be

- reconfirmed,
- withdrawn,
- replaced by a revised edition, or
- amended.

IMPORTANT – The “colour inside” logo on the cover page of this publication indicates that it contains colours which are considered to be useful for the correct understanding of its contents. Users should therefore print this publication using a colour printer.

Documents
Document Sharing Hub

Full document details: IEC 60034-1 2017 RLV

ROTATING ELECTRICAL MACHINES –

Part 1: Rating and performance

1 Scope

This part of IEC 60034 is applicable to all rotating electrical machines except those covered by other IEC standards, for example, IEC 60349.

Machines within the scope of this document may also be subject to superseding, modifying or additional requirements in other standards, for example, IEC 60079 and IEC 60092.

NOTE If particular clauses of this document are modified to meet special applications, for example machines subject to radioactivity or machines for aerospace, all other clauses apply insofar as they are compatible.

2 Normative references

The following documents are referred to in the text in such a way that some or all of their content constitutes requirements of this document. For dated references, only the edition cited applies. For undated references, the latest edition of the referenced document (including any amendments) applies.

IEC 60027-1, *Letter symbols to be used in electrical technology – Part 1: General*

IEC 60027-4, *Letter symbols to be used in electrical technology – Part 4: Rotating electric~~al~~ machines*

IEC 60034-2 (all parts), *Rotating electrical machines – Part 2: Standard methods for determining losses and efficiency from tests (excluding machines for traction vehicles)*

IEC 60034-3, *Rotating electrical machines – Part 3: Specific requirements for synchronous generators driven by steam turbines or combustion gas turbines*

IEC 60034-5, *Rotating electrical machines – Part 5: Degrees of protection provided by the integral design of rotating electrical machines (IP code) – Classification*

IEC 60034-6, *Rotating electrical machines – Part 6: Methods of cooling (IC code)*

IEC 60034-8, *Rotating electrical machines – Part 8: Terminal markings and direction of rotation*

IEC 60034-12:2016, *Rotating electrical machines – Part 12: Starting performance of single-speed three-phase cage induction motors*

IEC 60034-15, *Rotating electrical machines – Part 15: Impulse voltage withstand levels of form-wound stator coils for rotating a.c. machines*

~~IEC 60034-17, *Rotating electrical machines – Part 17: Cage induction motors when fed from converters – Application guide*~~

IEC 60034-18 (all parts), *Rotating electrical machines – Part 18: Functional evaluation of ~~insulating~~ insulation systems*

Documents
Document Sharing Hub

Full document details: IEC 60034-1 2017 RLV

IEC 60034-18-41, *Rotating electrical machines – Part 18-41: Partial discharge free electrical insulation systems (Type I) used in rotating electrical machines fed from voltage converters – Qualification and quality control tests*

IEC TS 60034-25, *Rotating electrical machines – Part 25: AC electrical machines used in power drive systems – Application guide*

IEC 60034-29, *Rotating electrical machines – Part 29: Equivalent loading and superposition techniques – Indirect testing to determine temperature rise*

~~IEC 60034-30, *Rotating electrical machines – Part 30: Efficiency classes of single-speed, three-phase, cage-induction motors (IE-code)*~~

IEC 60034-30-1, *Rotating electrical machines – Part 30-1: Efficiency classes of line operated A.C. motors (IE-code)*

IEC 60038, *IEC standard voltages*

IEC 60050-411:1996, *International Electrotechnical Vocabulary (IEV) – Chapter 411: Rotating machines*

IEC 60060-1, *High-voltage test techniques – Part 1: General definitions and test requirements*

IEC 60072 (all parts), *Dimensions and output series for rotating electrical machines*

IEC 60085, *Electrical insulation – Thermal evaluation and designation*

IEC 60204-1, *Safety of machinery – Electrical equipment of machines – Part 1: General requirements*

IEC 60204-11, *Safety of machinery – Electrical equipment of machines – Part 11: Requirements for HV equipment for voltages above 1 000 V a.c. or 1 500 V d.c. and not exceeding 36 kV*

IEC 60335-1:2010, *Household and similar electrical appliances – Safety – Part 1: General requirements*

IEC 60445, *Basic and safety principles for man-machine interface, marking and identification – Identification of equipment terminals, conductor ~~terminals~~ terminations and conductors*

IEC 60664-1, *Insulation coordination for equipment within low-voltage systems – Part 1: Principles, requirements and tests*

~~IEC 60971, *Semiconductor convertors. Identification code for convertor connections*~~ ~~[1]~~

IEC 61148, *Terminal markings for valve device stacks and assemblies and for power conversion equipment*

IEC 61293, *Marking of electrical equipment with ratings related to electrical supply – Safety requirements*

~~[1] IEC 60971 was withdrawn (and not replaced) in 2004.~~

Documents
Document Sharing Hub

Full document details: IEC 60034-1 2017 RLV

CISPR 11, *Industrial, scientific and medical equipment – Radiofrequency disturbance characteristics – Limits and methods of measurement*

CISPR 14 (all parts), *Electromagnetic compatibility – Requirements for household appliances, electric tools and similar apparatus*

CISPR 16 (all parts), *Specification for radio disturbance and immunity measuring apparatus and methods*

3 Terms and definitions

For the purposes of this document, the terms and definitions in IEC 60050-411, some of which are repeated here for convenience, and the following apply.

NOTE 1 For definitions concerning cooling and coolants, other than those in 3.17 to 3.22, ~~reference should be made to~~ see IEC 60034-6.

NOTE 2 For the purposes of this document, the term 'agreement' means 'agreement between the manufacturer and purchaser'.

ISO and IEC maintain terminological databases for use in standardization at the following addresses:

- IEC Electropedia: available at http://www.electropedia.org/
- ISO Online browsing platform: available at http://www.iso.org/obp

3.1
rated value
quantity value assigned, generally by a manufacturer, for a specified operating condition of a machine

Note 1 to entry: The rated voltage or voltage range is the rated voltage or voltage range between lines at the terminals.

[SOURCE: IEC 60050-411:1996, 411-51-23]

3.2
rating
set of rated values and operating conditions

[SOURCE: IEC 60050-411:1996, 411-51-24]

3.3
rated output
value of the output included in the rating

3.4
load
all the values of the, *in case of a generator*, electrical and, *in case of a motor*, mechanical quantities that signify the demand made on a rotating machine by an electrical circuit or a mechanism at a given instant

[SOURCE: IEC 60050-411:1996, 411-51-01, modified:modification indicated in italics]

3.5
no-load <operation>
state of a machine rotating with zero output power *(but under otherwise normal operating conditions)*

Documents
Document Sharing Hub

Full document details: IEC 60034-1 2017 RLV

[SOURCE: IEC 60050-411:1996, 411-51-02, modified: modification indicated in italics]

3.6
full load
load which causes a machine to operate at its rating

[SOURCE: IEC 60050-411:1996, 411-51-10]

3.7
full load value
quantity value for a machine operating at full load

Note 1 to entry: This concept applies to power, torque, current, speed, etc.

[SOURCE: IEC 60050-411:1996, 411-51-11]

3.8
de-energized and rest
complete absence of all movement and of all electrical supply or mechanical drive

[SOURCE: IEC 60050-411:1996, 411-51-03]

3.9
duty
statement of the load(s) to which the machine is subjected, including, if applicable, starting, electric braking, no-load and rest and de-energized periods, and including their durations and sequence in time

[SOURCE: IEC 60050-411:1996, 411-51-06]

3.10
duty type
continuous, short-time or periodic duty, comprising one or more loads remaining constant for the duration specified, or a non-periodic duty in which generally load and speed vary within the permissible operating range

[SOURCE: IEC 60050-411:1996, 411-51-13]

3.11
cyclic duration factor
ratio between the period of loading, including starting and electric braking, and the duration of the duty cycle, expressed as a percentage

[SOURCE: IEC 60050-411:1996, 411-51-09]

3.12
locked-rotor torque
smallest measured torque the motor develops at its shaft and with the rotor locked, over all its angular positions, at rated voltage and frequency

[SOURCE: IEC 60050-411:1996, 411-48-06]

3.13
locked-rotor current
greatest steady-state r.m.s. current taken from the line with the motor held at rest, over all angular positions of its rotor, at rated voltage and frequency

Documents
Document Sharing Hub
Full document details: IEC 60034-1 2017 RLV

[SOURCE: IEC 60050-411:1996, 411-48-16]

3.14
pull-up torque <of an a.c. motor>
smallest steady-state asynchronous torque which the motor develops between zero speed and the speed which corresponds to the breakdown torque, when the motor is supplied at the rated voltage and frequency

Note 1 to entry: This definition does not apply to those asynchronous motors of which the torque continually decreases with increase in speed.

Note 2 to entry: In addition to the steady-state asynchronous torques, harmonic synchronous torques, which are a function of rotor load angle, will be present at specific speeds.

At such speeds, the accelerating torque may be negative for some rotor load angles.

Experience and calculation show this to be an unstable operating condition and therefore harmonic synchronous torques do not prevent motor acceleration and are excluded from this definition.

3.15
breakdown torque <of an a.c. motor>
maximum steady-state asynchronous torque which the motor develops without an abrupt drop in speed, when the motor is supplied at the rated voltage and frequency

Note 1 to entry: This definition does not apply to motors with torques that continually decrease with increase in speed.

3.16
pull-out torque <of a synchronous motor>
maximum torque which the synchronous motor develops at synchronous speed with rated voltage, frequency and field current

3.17
cooling
procedure by means of which heat resulting from losses occurring in a machine is given up to a primary coolant, which may be continuously replaced or may itself be cooled by a secondary coolant in a heat exchanger

[SOURCE: IEC 60050-411:1996, 411-44-01]

3.18
coolant
medium, liquid or gas, by means of which heat is transferred

[SOURCE: IEC 60050-411:1996, 411-44-02]

3.19
primary coolant
medium, liquid or gas, which, being at a lower temperature than a part of a machine and in contact with it, removes heat from that part

[SOURCE: IEC 60050-411:1996, 411-44-03]

3.20
secondary coolant
medium, liquid or gas, which, being at a lower temperature than the primary coolant, removes the heat given up by this primary coolant by means of a heat exchanger or through the external surface of the machine

[SOURCE: IEC 60050-411:1996, 411-44-04]

Documents
Document Sharing Hub
Full document details: IEC 60034-1 2017 RLV

3.21
direct cooled winding
inner cooled winding
winding mainly cooled by coolant flowing in direct contact with the cooled part through hollow conductors, tubes, ducts or channels which, regardless of their orientation, form an integral part of the winding inside the main insulation

Note 1 to entry: In all cases when 'indirect' or 'direct' is not stated, an indirect cooled winding is implied.

[SOURCE: IEC 60050-411:1996, 411-44-08]

3.22
indirect cooled winding
any winding other than a direct cooled winding

Note 1 to entry: In all cases when 'indirect' or 'direct' is not stated, an indirect cooled winding is implied.

[SOURCE: IEC 60050-411:1996, 411-44-09]

3.23
supplementary insulation
independent insulation applied in addition to the main insulation in order to ensure protection against electric shock in the event of failure of the main insulation

3.24
moment of inertia
sum (integral) of the products of the mass elements of a body and the squares of their distances (radii) from a given axis

3.25
thermal equilibrium
state reached when the temperature rises of the several parts of the machine do not vary by more than a gradient of ~~2~~ *1 K per half hour*

Note 1 to entry: Thermal equilibrium may be determined from the time-temperature rise plot when the straight lines between points at the beginning and end of two successive ~~reasonable~~ intervals of half hour each have a gradient of 1 K or less ~~than~~ per half hour or 2 K or less per hour.

[SOURCE: IEC 60050-411:1996, 411-51-08, modified: modification indicated in italics]

3.26
thermal equivalent time constant
time constant, replacing several individual time constants, which determines approximately the temperature course in a winding after a step-wise current change

3.27
encapsulated winding
winding which is completely enclosed or sealed by moulded insulation

[SOURCE: IEC 60050-411:1996, 411-39-06]

3.28
rated form factor of direct current supplied to a d.c. motor armature from a static power converter
ratio of the r.m.s. maximum permissible value of the current $I_{\text{rms,maxN}}$ to its average value I_{avN} (mean value integrated over one period) at rated conditions:

$$k_{\text{fN}} = \frac{I_{\text{rms, maxN}}}{I_{\text{avN}}}$$

Documents
Document Sharing Hub
Full document details: IEC 60034-1 2017 RLV

3.29
current ripple factor
ratio of the difference between the maximum value I_{max} and the minimum value I_{min} of an undulating current to two times the average value I_{av} (mean value integrated over one period):

$$q_i = \frac{I_{max} - I_{min}}{2 \times I_{av}}$$

Note 1 to entry: For small values of current ripple, the ripple factor may be approximated by the following expression:

$$q_i = \frac{I_{max} - I_{min}}{I_{max} + I_{min}}$$

Note 2 to entry: The above expression may be used as an approximation if the resulting calculated value of q_i is equal to or less than 0,4.

3.30
tolerance
permitted deviation between the declared value of a quantity and the measured value

3.31
type test
test of one or more machines made to a certain design to show that the design meets certain specifications

Note 1 to entry: The type test may also be considered valid if it is made on a machine which has minor deviations of rating or other characteristics. These deviations should be subject to agreement.

[SOURCE: IEC 60050-411:1996, 411-53-01]

3.32
routine test
test to which each individual machine is subjected during or after manufacture to ascertain whether it complies with certain criteria

[SOURCE: IEC 60050-411:1996, 411-53-02]

3.33
runaway speed
maximum speed attained by the engine/generator set after removal of the full load of the generator if the speed regulator does not function

Note 1 to entry: For motors, the maximum overspeed at loss of supply is meant that a motor might reach driven by the coupled equipment

[SOURCE: IEC 60050-411:1996, 811-17-23]

4 Duty

4.1 Declaration of duty

It is the responsibility of the purchaser to declare the duty. The purchaser may describe the duty by one of the following:

a) numerically, where the load does not vary or where it varies in a known manner;

b) as a time sequence graph of the variable quantities;

Documents
Document Sharing Hub
Full document details: IEC 60034-1 2017 RLV

c) by selecting one of the duty types S1 to S10 that is no less onerous than the expected duty.

The duty type shall be designated by the appropriate abbreviation, specified in 4.2, written after the value of the load.

An expression for the cyclic duration factor is given in the relevant duty type figure.

The purchaser normally cannot provide values for the moment of inertia of the ~~motor~~ machine (J_M) or the relative thermal life expectancy (TL), see Annex A. These values are provided by the manufacturer.

Where the purchaser does not declare a duty, the manufacturer shall assume that duty type S1 (continuous running duty) applies.

4.2 Duty types

4.2.1 Duty type S1 – Continuous running duty

Operation at a constant load maintained for sufficient time to allow the machine to reach thermal equilibrium, see Figure 1.

The appropriate abbreviation is S1.

Documents
Document Sharing Hub

Full document details: IEC 60034-1 2017 RLV

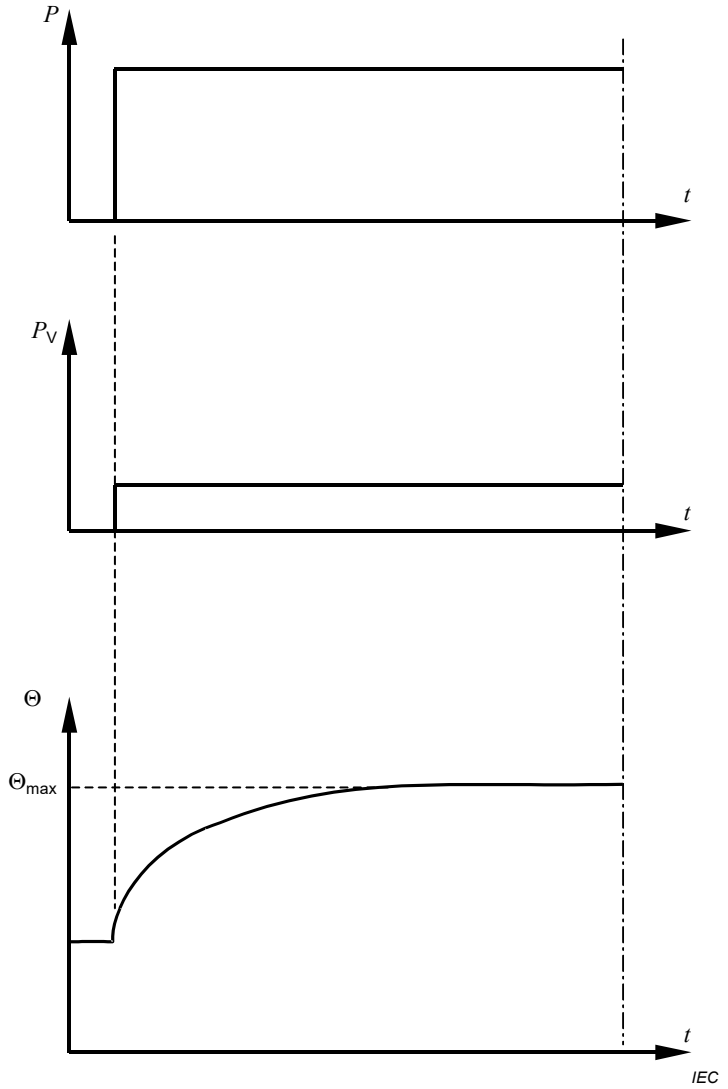

Key

P	load
P_V	electrical losses
$Θ$	temperature
$Θ_{max}$	maximum temperature attained
t	time

Figure 1 – Continuous running duty – Duty type S1

4.2.2 Duty type S2 – Short-time duty

Operation at constant load for a given time, less than that required to reach thermal equilibrium, followed by a time de-energized and at rest of sufficient duration to re-establish machine temperatures within 2 K of the coolant temperature, see Figure 2.

The appropriate abbreviation is S2, followed by an indication of the duration of the duty,

Example: S2 60 min.

Documents
Document Sharing Hub
Full document details: IEC 60034-1 2017 RLV

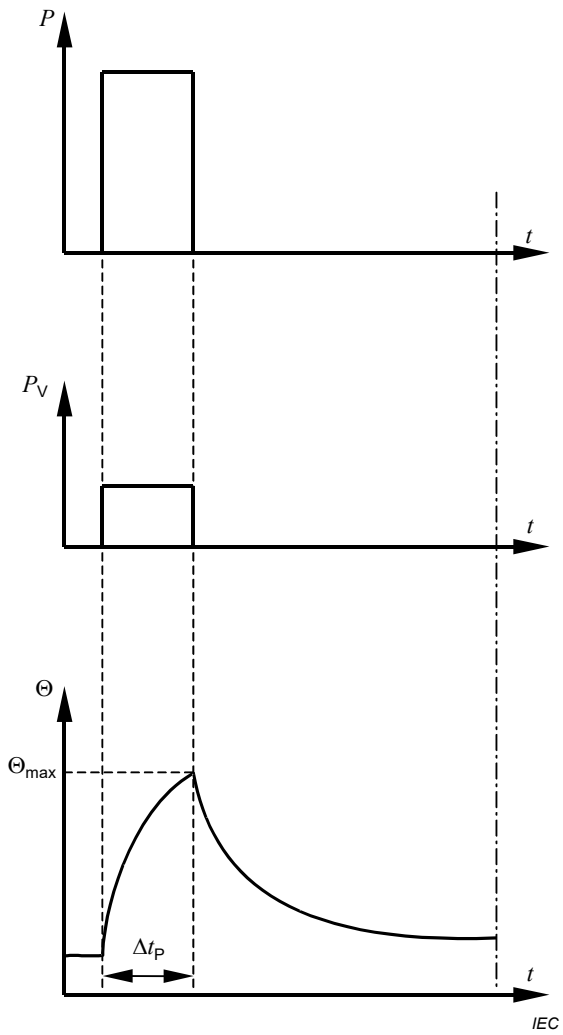

Key

P	load
P_V	electrical losses
$Θ$	temperature
$Θ_{max}$	maximum temperature attained
t	time
$Δt_P$	operation time at constant load

Figure 2 – Short-time duty – Duty type S2

4.2.3 Duty type S3 – Intermittent periodic duty

NOTE Periodic duty implies that thermal equilibrium is not reached during the time on load.

A sequence of identical duty cycles, each including a time of operation at constant load and a time de-energized and at rest, see Figure 3. In this duty, the cycle is such that the starting current does not significantly affect the temperature rise.

The appropriate abbreviation is S3, followed by the cyclic duration factor.

Example: S3 25 %.

Documents
Document Sharing Hub
Full document details: IEC 60034-1 2017 RLV

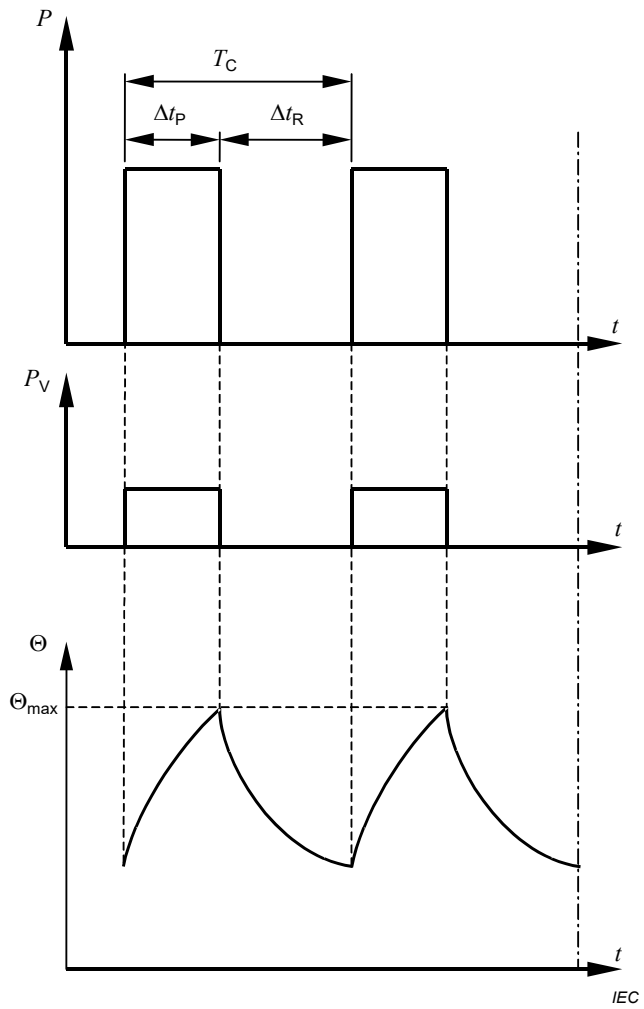

Key

P	load
P_V	electrical losses
Θ	temperature
Θ_{max}	maximum temperature attained
t	time
T_C	time of one load cycle
Δt_P	operation time at constant load
Δt_R	time de-energized and at rest

Cyclic duration factor = $\Delta t_P / T_C$

Figure 3 – Intermittent periodic duty – Duty type S3

4.2.4 Duty type S4 – Intermittent periodic duty with starting

NOTE Periodic duty implies that thermal equilibrium is not reached during the time on load.

A sequence of identical duty cycles, each cycle including a significant starting time, a time of operation at constant load and a time de-energized and at rest, see Figure 4.

The appropriate abbreviation is S4, followed by the cyclic duration factor, the moment of inertia of the motor (J_M) and the moment of inertia of the load (J_{ext}), both referred to the motor shaft.

Example: S4 25 % J_M = 0,15 kg × m^2 J_{ext} = 0,7 kg × m^2.

Documents
Document Sharing Hub
Full document details: IEC 60034-1 2017 RLV

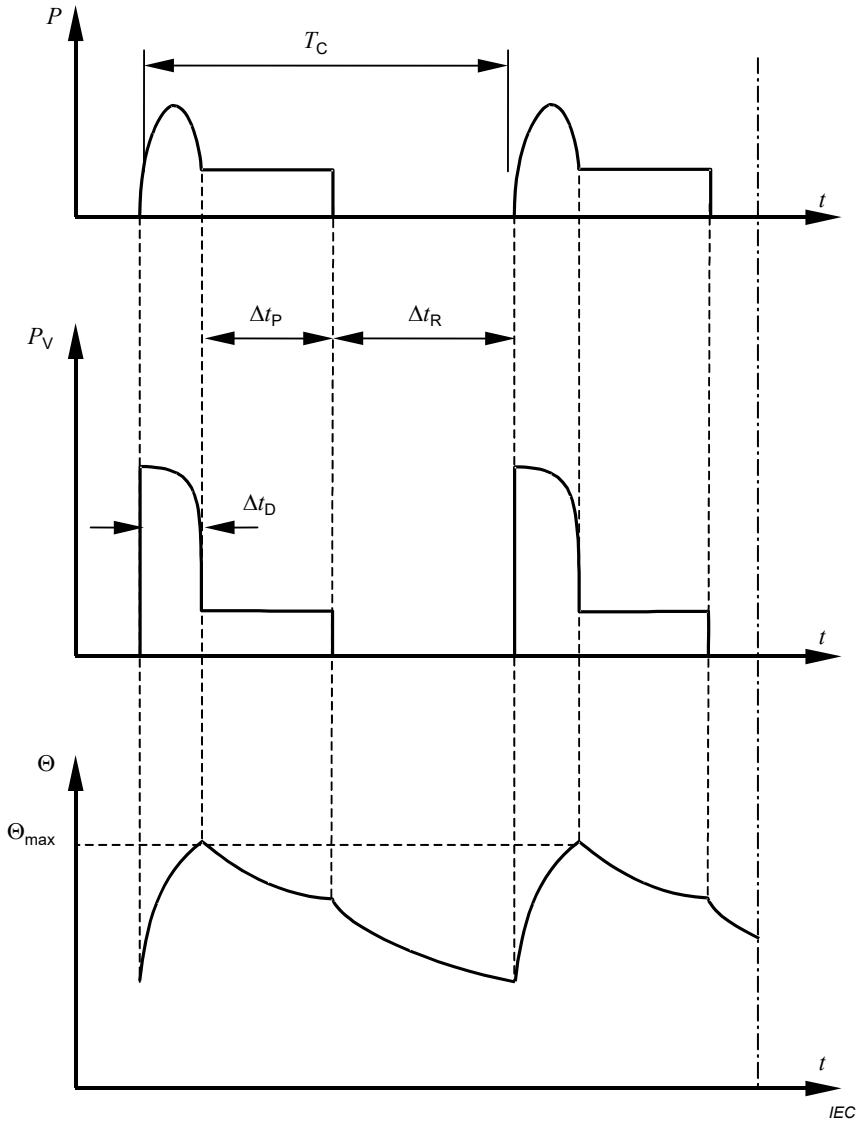

Key

P	load	t	time
P_V	electrical losses	T_C	time of one load cycle
Θ	temperature	Δt_D	starting/accelerating time
Θ_{max}	maximum temperature attained	Δt_P	operation time at constant load
		Δt_R	time de-energized and at rest

Cyclic duration factor = $(\Delta t_D + \Delta t_P)/T_C$

Figure 4 – Intermittent periodic duty with starting – Duty type S4

4.2.5 Duty type S5 – Intermittent periodic duty with electric braking

NOTE Periodic duty implies that thermal equilibrium is not reached during the time on load.

A sequence of identical duty cycles, each cycle consisting of a starting time, a time of operation at constant load, a time of electric braking and a time de-energized and at rest, see Figure 5.

The appropriate abbreviation is S5, followed by the cyclic duration factor, the moment of inertia of the motor (J_M) and the moment of inertia of the load (J_{ext}), both referred to the motor shaft.

AVA Documents Document Sharing Hub

Example: S5 25 % J_M = 0,15 kg × m^2 J_{ext} = 0,7 kg × m^2

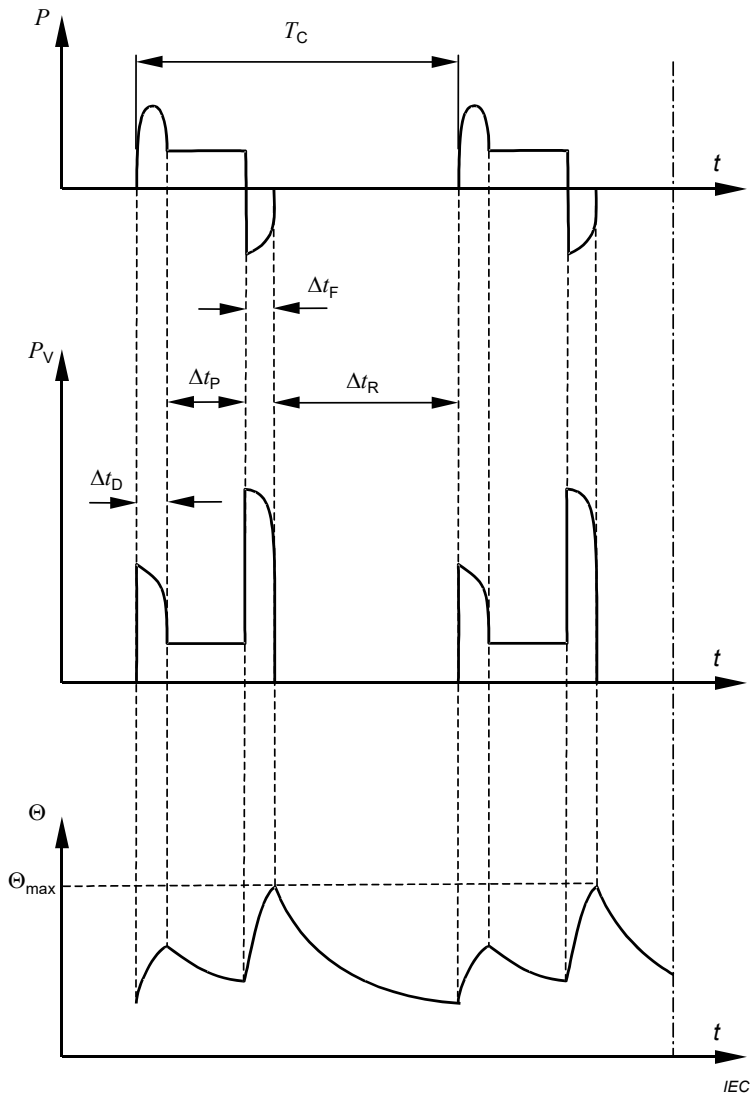

Key

P	load	T_C	time of one load cycle
P_V	electrical losses	Δt_D	starting/accelerating time
Θ	temperature	Δt_P	operation time at constant load
Θ_{max}	maximum temperature attained	Δt_F	time of electric braking
t	time	Δt_R	time de-energized and at rest

Cyclic duration factor = $(\Delta t_D + \Delta t_P + \Delta t_F)/T_C$

Figure 5 – Intermittent periodic duty with electric braking – Duty type S5

4.2.6 Duty type S6 – Continuous operation periodic duty

NOTE Periodic duty implies that thermal equilibrium is not reached during the time on load.

A sequence of identical duty cycles, each cycle consisting of a time of operation at constant load and a time of operation at no-load. There is no time de-energized and at rest, see Figure 6.

The appropriate abbreviation is S6, followed by the cyclic duration factor.

Example: S6 40 %

Documents
Document Sharing Hub
Full document details: IEC 60034-1 2017 RLV

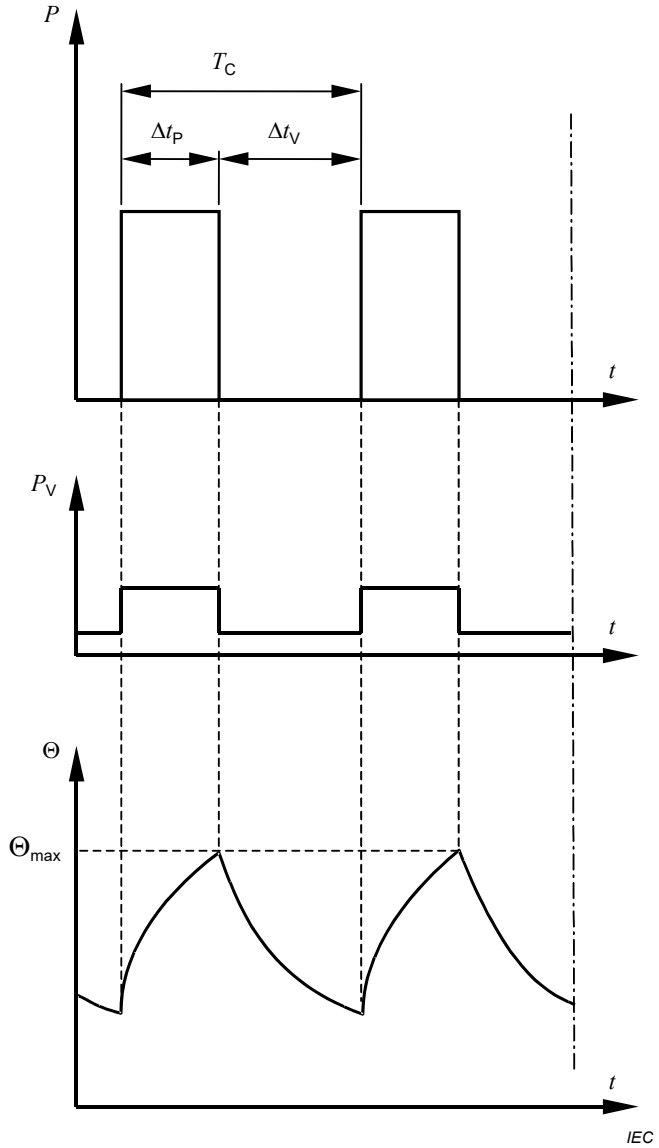

Key

P	load	t	time
P_V	electrical losses	T_C	time of one load cycle
Θ	temperature	Δt_P	operation time at constant load
Θ_{max}	maximum temperature attained	Δt_V	operation time at no-load

Cyclic duration factor = $\Delta t_P / T_C$

Figure 6 – Continuous operation periodic duty – Duty type S6

4.2.7 Duty type S7 – Continuous operation periodic duty with electric braking

NOTE Periodic duty implies that thermal equilibrium is not reached during the time on load.

A sequence of identical duty cycles, each cycle consisting of a starting time, a time of operation at constant load and a time of electric braking. There is no time de-energized and at rest, see Figure 7.

The appropriate abbreviation is S7, followed by the moment of inertia of the motor (J_M) and the moment of inertia of the load (J_{ext}), both referred to the motor shaft.

Example: S7 J_M = 0,4 kg × m^2 J_{ext} = 7,5 kg × m^2

Documents
Document Sharing Hub
Full document details: IEC 60034-1 2017 RLV

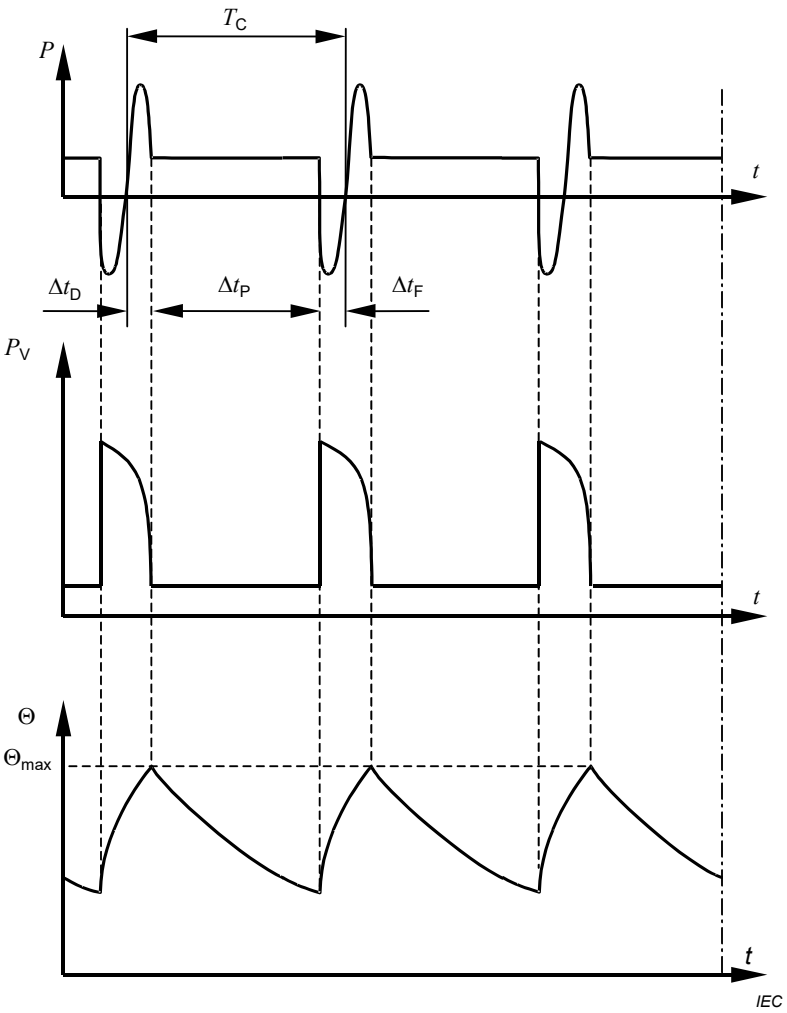

Key

P	load	t	time
P_V	electrical losses	T_C	time of one load cycle
Θ	temperature	Δt_D	starting/accelerating time
Θ_{max}	maximum temperature attained	Δt_P	operation time at constant load
Cyclic duration factor = 1		Δt_F	time of electric braking

Figure 7 – Continuous operation periodic duty with electric braking – Duty type S7

4.2.8 Duty type S8 – Continuous operation periodic duty with related load/speed changes

NOTE Periodic duty implies that thermal equilibrium is not reached during the time on load.

A sequence of identical duty cycles, each cycle consisting of a time of operation at constant load corresponding to a predetermined speed of rotation, followed by one or more times of operation at other constant loads corresponding to different speeds of rotation (carried out, for example, by means of a change in the number of poles in the case of induction motors). There is no time de-energized and at rest (see Figure 8).

The appropriate abbreviation is S8, followed by the moment of inertia of the motor (J_M) and the moment of inertia of the load (J_{ext}), both referred to the motor shaft, together with the load, speed and cyclic duration factor for each speed condition.

Documents
Document Sharing Hub
Full document details: IEC 60034-1 2017 RLV

Example:	S8 J_M = 0,5 kg × m^2	J_{ext} = 6 kg × m^2	16 kW	740 min^{-1}	30 %
			40 kW	1 460 min^{-1}	30 %
			25 kW	980 min^{-1}	40 %

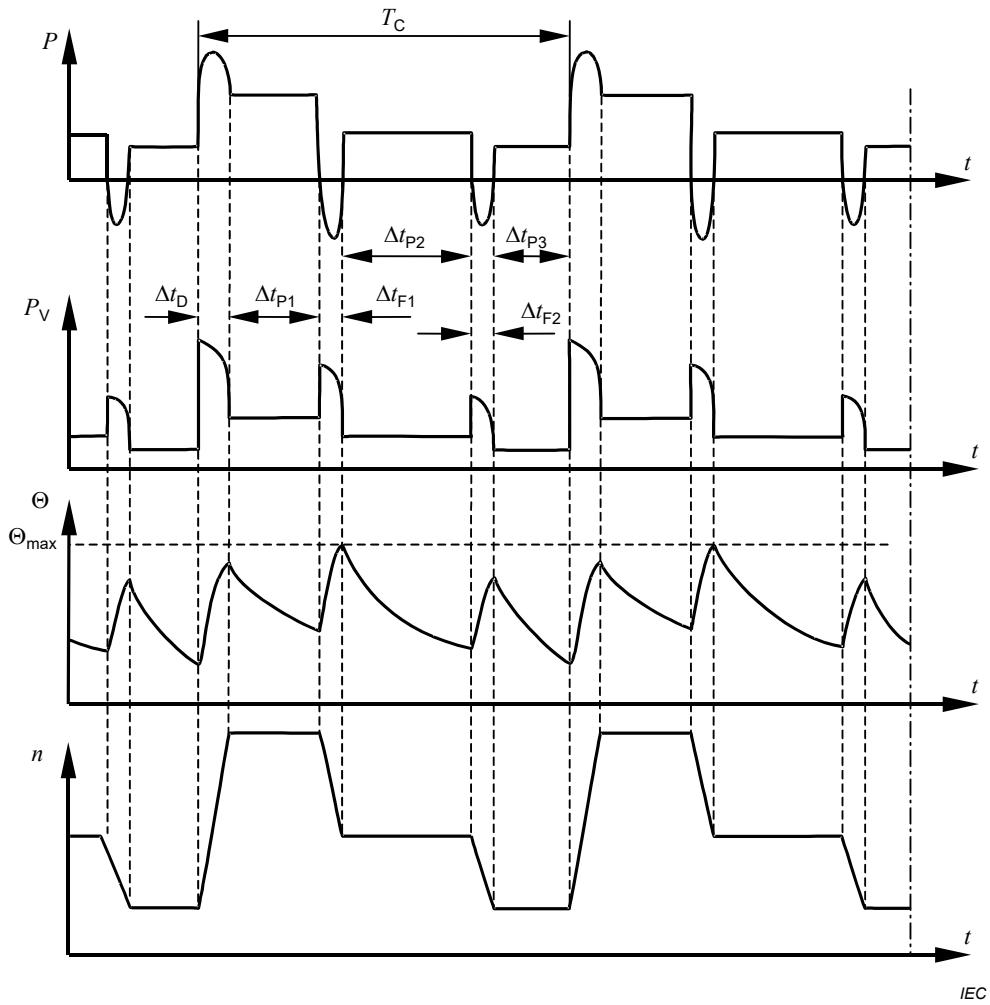

Key

P	load	t	time
P_V	electrical losses	T_C	time of one load cycle
Θ	temperature	Δt_D	starting/accelerating time
Θ_{max}	maximum temperature attained	Δt_P	operation time at constant load (P1, P2, P3)
n	speed	Δt_F	time of electric braking (F1, F2)

Cyclic duration factor = $(\Delta t_D + \Delta t_{P1})/T_C$; $(\Delta t_{F1} + \Delta t_{P2})/T_C$; $(\Delta t_{F2} + \Delta t_{P3})/T_C$

Figure 8 – Continuous operation periodic duty with related load/speed changes – Duty type S8

4.2.9 Duty type S9 – Duty with non-periodic load and speed variations

A duty in which generally load and speed vary non-periodically within the permissible operating range. This duty includes frequently applied overloads that may greatly exceed the reference load (see Figure 9).

The appropriate abbreviation is S9.

For this duty type, a constant load appropriately selected and based on duty type S1 is taken as the reference value ("P_{ref}" in Figure 9) for the overload concept.

AVA Documents Document Sharing Hub

Full document details: IEC 60034-1 2017 RLV

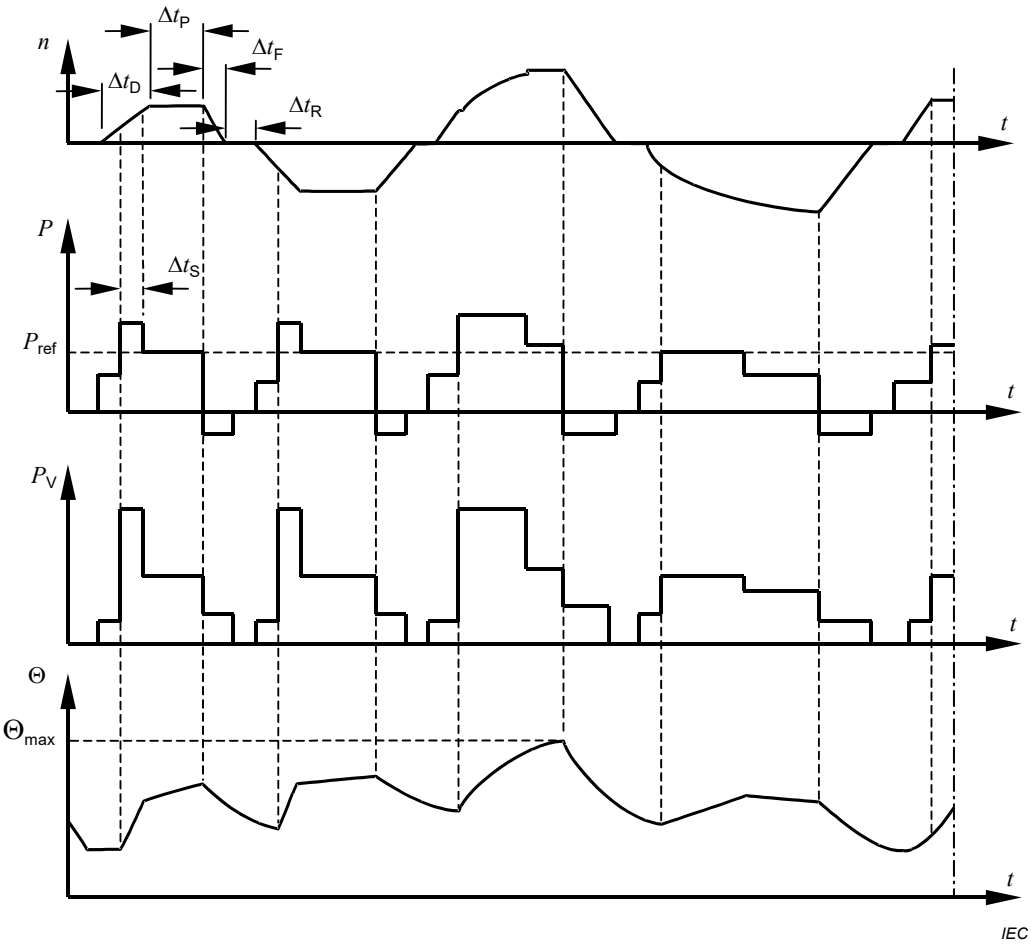

Key

P	load	t	time
P_{ref}	reference load	Δt_D	starting/accelerating time
P_V	electrical losses	Δt_P	operation time at constant load
Θ	temperature	Δt_F	time of electric braking
Θ_{max}	maximum temperature attained	Δt_R	time de-energized and at rest
n	speed	Δt_S	time under overload

Figure 9 – Duty with non-periodic load and speed variations – Duty type S9

4.2.10 Duty type S10 – Duty with discrete constant loads and speeds

A duty consisting of a specific number of discrete values of load (or equivalent loading) and if applicable, speed, each load/speed combination being maintained for sufficient time to allow the machine to reach thermal equilibrium, see Figure 10. The minimum load within a duty cycle may have the value zero (no-load or de-energized and at rest).

The appropriate abbreviation is S10, followed by the per unit quantities $p/\Delta t$ for the respective load and its duration and the per unit quantity TL for the relative thermal life expectancy of the insulation system. The reference value for the thermal life expectancy is the thermal life expectancy at rating for continuous running duty and permissible limits of temperature rise based on duty type S1. For a time de-energized and at rest, the load shall be indicated by the letter r.

Example: S10 $p/\Delta t$ = 1,1/0,4; 1/0,3; 0,9/0,2; r/0,1 TL = 0,6

Documents
Document Sharing Hub
Full document details: IEC 60034-1 2017 RLV

The value of TL should be rounded off to the nearest multiple of 0,05. Advice concerning the significance of this parameter and the derivation of its value is given in Annex A.

For this duty type a constant load appropriately selected and based on duty type S1 shall be taken as the reference value ('P_{ref}' in Figure 10) for the discrete loads.

~~NOTE~~ The discrete values of load will usually be equivalent loading based on integration over a period of time. It is not necessary that each load cycle be exactly the same, only that each load within a cycle be maintained for sufficient time for thermal equilibrium to be reached, and that each load cycle be capable of being integrated to give the same relative thermal life expectancy.

Documents
Document Sharing Hub

Full document details: IEC 60034-1 2017 RLV

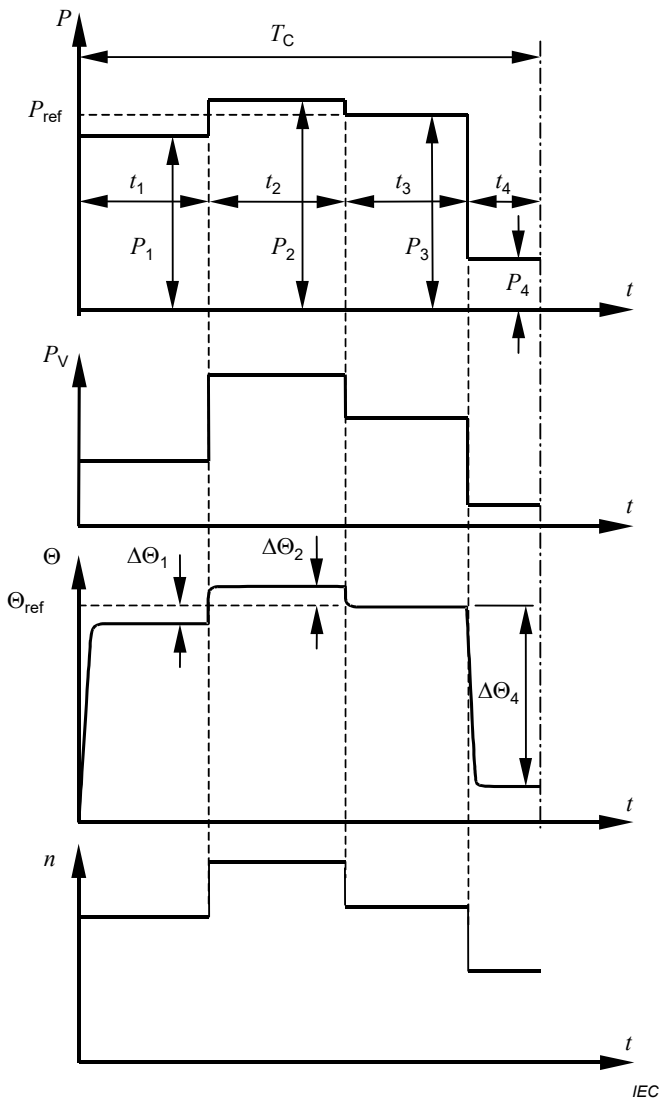

Key

P	load	t	time
P_i	constant load within a load cycle	t_i	time of a constant load within a cycle
P_{ref}	reference load based on duty type S1	T_C	time of one load cycle
P_V	electrical losses	$\Delta\Theta_i$	difference between the temperature rise of the winding at each of the various loads within one cycle and the temperature rise based on duty cycle S1 with reference load
Θ	temperature	n	speed
Θ_{ref}	temperature at reference load based on duty type S1		

Figure 10 – Duty with discrete constant loads – Duty type S10

Documents
Document Sharing Hub
Full document details: IEC 60034-1 2017 RLV

5 Rating

5.1 Assignment of rating

The rating, as defined in 3.2, shall be assigned by the manufacturer. In assigning the rating the manufacturer shall select one of the classes of rating defined in 5.2.1 to 5.2.6. The designation of the class of rating shall be written after the rated output. If no designation is stated, rating for continuous running duty applies.

When accessory components (such as reactors, capacitors, etc.) are connected by the manufacturer as part of the machine, the rated values shall refer to the supply terminals of the whole arrangement.

NOTE This does not apply to power transformers connected between the machine and the supply.

Special considerations are required when assigning ratings to machines fed from or supplying static converters. ~~IEC 60034-17~~ IEC TS 60034-25 gives guidance ~~for the case of cage induction motors covered in IEC 60034-12~~ on this.

5.2 Classes of rating

5.2.1 Rating for continuous running duty

A rating at which the machine may be operated for an unlimited period, while complying with the requirements of this document.

This class of rating corresponds to duty type S1 and is designated as for the duty type S1.

5.2.2 Rating for short-time duty

A rating at which the machine may be operated for a limited period, starting at ambient temperature, while complying with the requirements of this document.

This class of rating corresponds to duty type S2 and is designated as for the duty type S2.

5.2.3 Rating for periodic duty

A rating at which the machine may be operated on duty cycles, while complying with the requirements of this document.

This class of rating corresponds to one of the periodic duty types S3 to S8 and is designated as for the corresponding duty type.

Unless otherwise specified, the duration of a duty cycle shall be 10 min and the cyclic duration factor shall be one of the following values:

15 %, 25 %, 40 %, 60 %.

5.2.4 Rating for non-periodic duty

A rating at which the machine may be operated non-periodically while complying with the requirements of this document.

This class of rating corresponds to the non-periodic duty type S9 and is designated as for the duty type S9.

Documents
Document Sharing Hub
Full document details: IEC 60034-1 2017 RLV

5.2.5 Rating for duty with discrete constant loads and speeds

A rating at which the machine may be operated with the associated loads and speeds of duty type S10 for an unlimited period of time while complying with the requirements of this document. The maximum permissible load within one cycle shall take into consideration all parts of the machine, for example, the insulation system regarding the validity of the exponential law for the relative thermal life expectancy, bearings with respect to temperature, other parts with respect to thermal expansion. Unless specified in other relevant IEC standards, the maximum load shall not exceed 1,15 times the value of the load based on duty type S1. The minimum load may have the value zero, the machine operating at no-load or being de-energized and at rest. Considerations for the application of this class of rating are given in Annex A.

This class of rating corresponds to the duty type S10 and is designated as for the duty type S10.

NOTE Other relevant IEC standards may specify the maximum load in terms of limiting winding temperature (or temperature rise) instead of per unit load based on duty type S1.

5.2.6 Rating for equivalent loading

A rating, for test purposes, at which the machine may be operated at constant load until thermal equilibrium is reached and which results in the same stator winding temperature rise as the average temperature rise during one load cycle of the specified duty type.

~~NOTE~~ The determination of an equivalent rating should take account of the varying load, speed and cooling of the duty cycle.

This class of rating, if applied, is designated 'equ'.

5.3 Selection of a class of rating

A machine manufactured for general purpose shall have a rating for continuous running duty and be capable of performing duty type S1.

If the duty has not been specified by the purchaser, duty type S1 applies and the rating assigned shall be a rating for continuous running duty.

When a machine is intended to have a rating for short-time duty, the rating shall be based on duty type S2, see 4.2.2.

When a machine is intended to supply varying loads or loads including a time of no-load or times where the machine will be in a state of de-energized and at rest, the rating shall be a rating for periodic duty based on a duty type selected from duty types S3 to S8, see 4.2.3 to 4.2.8.

When a machine is intended to supply non-periodically variable loads at variable speeds, including overloads, the rating shall be a rating for non-periodic duty based on duty type S9, see 4.2.9.

When a machine is intended to supply discrete constant loads including times of overload or times of no-load (or de-energized and at rest) the rating shall be a rating with discrete constant loads based on duty type S10, see 4.2.10.

5.4 Allocation of outputs to class of rating

In the determination of the rating:

Documents
Document Sharing Hub
Full document details: IEC 60034-1 2017 RLV

For duty types S1 to S8, the specified value(s) of the constant load(s) shall be the rated output(s), see 4.2.1 to 4.2.8.

For duty types S9 and S10, the reference value of the load based on duty type S1 shall be taken as the rated output, see 4.2.9 and 4.2.10.

5.5 Rated output

5.5.1 DC generators

The rated output is the output at the terminals and shall be expressed in watts (W).

5.5.2 AC generators

The rated output is the apparent power at the terminals and shall be expressed in volt-amperes (VA) together with the power factor.

The rated power factor for synchronous generators shall be 0,8 lagging (over-excited), unless otherwise specified by the purchaser.

NOTE A P-Q capability diagram (power chart) indicating the limits of operation, provides more detailed information on generator's performance.

5.5.3 Motors

The rated output is the mechanical power available at the shaft and shall be expressed in watts (W).

NOTE It is the practice in some countries for the mechanical power available at the shafts of motors to be expressed in horsepower (1 h.p. is equivalent to 745,7 W; 1 ch (cheval or metric horsepower) is equivalent to 736 W).

5.5.4 Synchronous condensers

The rated output is the reactive power at the terminals and shall be expressed in volt-amperes reactive (var) in leading (under-excited) and lagging (over-excited) conditions.

5.6 Rated voltage

5.6.1 DC generators

For d.c. generators intended to operate over a relatively small range of voltage, the rated output and current shall apply at the highest voltage of the range, unless otherwise specified, see also 7.3.

5.6.2 AC generators

For a.c. generators intended to operate over a relatively small range of voltage, the rated output and power factor shall apply at any voltage within the range, unless otherwise specified, see also 7.3.

5.7 Co-ordination of voltages and outputs

It is not practical to build machines of all ratings for all rated voltages. In general, for a.c. machines, based on design and manufacturing considerations, preferred voltage ratings above 1 kV in terms of rated output are as shown in Table 1.

Documents
Document Sharing Hub
Full document details: IEC 60034-1 2017 RLV

Table 1 – Preferred voltage ratings

Rated voltage kV	**Minimum rated output** kW (or kVA)
$1{,}0 < U_N \leq 3{,}0$	100
$3{,}0 < U_N \leq 6{,}0$	150
$6{,}0 < U_N \leq 11{,}0$	800
$11{,}0 < U_N \leq 15{,}0$	2 500

5.8 Machines with more than one rating

For machines with more than one rating, the machine shall comply with this document in all respects at each rating.

For multi-speed ~~motors~~ machines, a rating shall be assigned for each speed.

When a rated quantity (output, voltage, speed, etc.) may assume several values or vary continuously within two limits, the rating shall be stated at these values or limits. This provision does not apply to voltage and frequency variations during operation as defined in 7.3 or to star-delta connections intended for starting.

6 Site ~~operating~~ conditions

6.1 General

Unless otherwise specified, machines shall be suitable for the following site ~~operating~~ conditions outside the casing during operation, for standstill, storage and transportation. The cold coolant inlet temperatures for different types of cooling are specified in Table 5. For site operating conditions deviating from those values, corrections are given in Clause 8.

Machines operating outside the range of the standard site conditions shall require special consideration.

6.2 Altitude

The altitude shall not exceed 1 000 m above sea-level.

6.3 Maximum ambient air temperature

The ambient air temperature shall not exceed 40 °C.

6.4 Minimum ambient air temperature

Unless otherwise agreed between manufacturer and customer, the ambient air temperature shall not be less than –15 °C for ~~any~~ all machines except machines with any of the following, for which the ambient temperature shall be not less than 0 ºC ~~for a machine with any of the following~~:

a) rated output greater than 3 300 kW (or kVA) per 1 000 min^{-1};

b) rated output less than 600 W (or VA);

c) a commutator;

d) a sleeve bearing;

e) water as a primary or secondary coolant.

Documents
Document Sharing Hub
Full document details: IEC 60034-1 2017 RLV

6.5 Water coolant temperature

For the reference water coolant temperature see Table 5. For other water coolant temperatures see Table 10. The water coolant temperature shall not be less than +5 °C.

6.6 Standstill, storage and transport

When temperatures lower than specified in 6.4 are expected during transportation, storage, or after installation at standstill, the purchaser shall inform the manufacturer and specify the expected minimum temperature.

NOTE Special measures may be needed before energizing the machine after longer periods of standstill, storage and transportation. Special measures may also be needed during the un-operational periods. See manufacturer's instructions.

6.7 Purity of hydrogen coolant

Hydrogen cooled machines shall be capable of operating at rated output under rated conditions with a coolant containing not less than 95 % hydrogen by volume.

NOTE For safety reasons, the hydrogen content should at all times be maintained at 90 % or more, it being assumed that the other gas in the mixture is air.

For calculating efficiency in accordance with IEC 60034-2 (all parts), the standard composition of the gaseous mixture shall be 98 % hydrogen and 2 % air by volume, at the specified values of pressure and temperature of the re-cooled gas, unless otherwise agreed. Windage losses shall be calculated at the corresponding density.

7 Electrical operating conditions

7.1 Electrical supply

For three-phase a.c. machines, 50 Hz or 60 Hz, intended to be directly connected to distribution or utilisation systems, the rated voltages shall be derived from the nominal voltages given in IEC 60038.

NOTE For large high-voltage a.c. machines, the voltages may be selected for optimum performance.

For a.c. ~~motors supplied from~~ machines connected to static converters these restrictions on voltage, frequency and waveform do not apply. In this case, the rated voltages shall be selected by agreement.

For electrical machines with Type I insulation systems according to IEC 60034-18-41, which are specifically designed for supply by voltage source converters, the manufacturer can assign an impulse voltage insulation class (IVIC) according to IEC 60034-18-41 for the insulation system. In this case, the insulation system should be suitable for IVIC C for phase-to-phase and IVIC B for phase-to-ground or as otherwise agreed to between the user and the manufacturer. The IVIC level shall be given in the documentation and preferably on the nameplate (see 10.2).

NOTE For more information on special considerations for converter fed machines, see IEC TS 60034-25.

Any bus transfer or fast reclosing of an a.c. machine, as it might occur, for example, due to the voltage ride through requirements of grid codes, can lead to very high peak currents endangering the stator winding overhang and to a very high peak torque of up to 20 times rated torque endangering the mechanical structure including the coupling and the driven or driving equipment. Bus transfer or fast reclosing is therefore only allowed if specified and accepted by the manufacturers of electric machine and driven equipment. For ratings ≤ 10 MW or MVA, slow reclosing exceeding 1,5 times the open circuit time constant is allowed, if specified and accepted by the manufacturers of the electric machine and the driven equipment. For ratings > 10 MW or MVA, the allowed minimum time for slow reclosing shall

AVA Documents
Document Sharing Hub
Full document details: IEC 60034-1 2017 RLV

be determined by transient analysis of the complete system by the system integrator and is allowed if accepted by the manufacturers of the electric machine and the driven equipment.

7.2 Form and symmetry of voltages and currents

7.2.1 AC motors

7.2.1.1 AC motors rated for use on a power supply of fixed frequency, supplied from an a.c. generator (whether local or via a supply network) shall be suitable for operation on a supply voltage having a harmonic voltage factor (HVF) not exceeding:

– 0,02 for single-phase motors and three-phase motors, including synchronous motors but excluding motors of design N (see IEC 60034-12), unless the manufacturer declares otherwise.

– 0,03 for design N motors.

The HVF shall be computed by using the following formula:

$$HVF = \sqrt{\sum_{n=2}^{k} \frac{u_n^2}{n}}$$

where

u_n is the ratio of the harmonic voltage U_n to the rated voltage U_N;

n is the order of harmonic (not divisible by three in the case of three-phase a.c. motors);

k = 13.

Three-phase a.c. motors shall be suitable for operation on a three-phase voltage system having a negative-sequence component not exceeding 1 % of the positive-sequence component over a long period, or 1,5 % for a short period not exceeding a few minutes, and a zero-sequence component not exceeding 1 % of the positive-sequence component.

Should the limiting values of the HVF and of the negative-sequence and zero-sequence components occur simultaneously in service at the rated load, this shall not lead to any harmful temperature in the motor and it is recommended that the resulting excess temperature rise related to the limits specified in this document should be not more than approximately 10 K.

NOTE In the vicinity of large single-phase loads (e.g. induction furnaces), and in rural areas particularly on mixed industrial and domestic systems, supplies may be distorted beyond the limits set out above. Special arrangements will then be necessary.

7.2.1.2 AC motors supplied from static converters have to tolerate higher harmonic contents of the supply voltage; see ~~IEC 60034-17 for the case of cage motors within the scope of IEC 60034-12~~ IEC TS 60034-25.

NOTE When the supply voltage is significantly non-sinusoidal, for example from static converters, the r.m.s. value of the total waveform and of the fundamental are both relevant in determining the performance of an a.c. machine.

7.2.2 AC generators

Three-phase a.c. generators shall be suitable for supplying circuits which, when supplied by a system of balanced and sinusoidal voltages:

a) result in currents not exceeding a harmonic current factor (HCF) of 0,05, and

b) result in a system of currents where neither the negative-sequence component nor the zero-sequence component exceed 5 % of the positive-sequence component.

The HCF shall be computed by using the following formula:

Documents
Document Sharing Hub
Full document details: IEC 60034-1 2017 RLV

$$HCF = \sqrt{\sum_{n=2}^{k} i_n^2}$$

where

i_n is the ratio of the harmonic current I_n to the rated current I_N;

n is the order of harmonic;

k = 13.

Should the limits of deformation and imbalance occur simultaneously in service at the rated load, this shall not lead to any harmful temperature in the generator and it is recommended that the resulting excess temperature rise related to the limits specified in this document should be not more than approximately 10 K.

7.2.3 Synchronous machines

Unless otherwise specified, three-phase synchronous machines shall be capable of operating continuously on an unbalanced system in such a way that, with none of the phase currents exceeding the rated current, the ratio of the negative-sequence component of current (I_2) to the rated current (I_N) does not exceed the values in Table 2 and under fault conditions shall be capable of operation with the product of $(I_2/I_N)^2$ and time (t) not exceeding the values in Table 2.

Documents
Document Sharing Hub

Full document details: IEC 60034-1 2017 RLV

Table 2 – Unbalanced operating conditions for synchronous machines

Item	Machine type	Maximum I_2/I_N value for continuous operation	Maximum $(I_2/I_N)^2 \times t$ in seconds for operation under fault conditions
	Salient pole machines and PM excited machines		
1	Indirect cooled windings		
	motors	0,1	20
	generators	0,08	20
	synchronous condensers	0,1	20
2	Direct cooled (inner cooled) stator and/or field windings		
	motors	0,08	15
	generators	0,05	15
	synchronous condensers	0,08	15
	Cylindrical rotor synchronous machines		
3	Indirect cooled rotor windings		
	air-cooled	0,1	15
	hydrogen-cooled	0,1	10
4	Direct cooled (inner cooled) rotor windings		
	≤350 MVA	0,08	8
	>350 ≤900 MVA	[a]	[b]
	>900 ≤1 250 MVA	[a]	5
	>1 250 ≤1 600 MVA	0,05	5

[a] For these machines, the value of I_2/I_N is calculated as follows:

$$\frac{I_2}{I_N} = 0{,}08 - \frac{S_N - 350}{3 \times 10^4}$$

[b] For these machines, the value of $(I_2/I_N)^2 \times t$, in seconds, is calculated as follows:
$(I_2/I_N)^2 \times t = 8 - 0{,}005\,45\,(S_N - 350)$
where in the two footnotes, S_N is the rated apparent power in MVA.

7.2.4 DC motors supplied from static power converters

In the case of a d.c. motor supplied from a static power converter, the pulsating voltage and current affect the performance of the machine. Losses and temperature rise will increase and the commutation is more difficult compared with a d.c. motor supplied from a pure d.c. power source.

It is necessary, therefore, for motors with a rated output exceeding 5 kW, intended for supply from a static power converter, to be designed for operation from a specified supply, and, if considered necessary by the motor manufacturer, for an external inductance to be provided for reducing the undulation.

The static power converter supply shall be characterized by means of an identification code, as follows:

$$[CCC - U_{aN} - f - L]$$

where

CCC is the identification code ~~for converter connection according to IEC 60971~~ from Table 3, which is based on IEC 61148;

AVA Documents Document Sharing Hub

U_{aN} consists of three or four digits indicating the rated alternating voltage at the input terminals of the converter, in V;

f consists of two digits indicating the rated input frequency, in Hz;

L consists of one, two or three digits indicating the series inductance to be added externally to the motor armature circuit, in mH. If this is zero, it is omitted.

Table 3 – *CCC* symbol designation

Identification code *CCC*	1-pair configuration (Configuration name)	Pair number "m" for arms in IEC 61148	Clause No. and title in IEC 61148
A-Type	Thyristor + Thyristor (Full bridge)	m = 3	5.1.3.2 Bridge connection
B-Type	Thyristor + Diode (Mixed bridge)	m = 3	Same as above
C-Type	Thyristor + Thyristor (Full bridge)	m = 2	Same as above
D-Type	Thyristor + Diode (Mixed bridge)	m = 2	Same as above

Motors with rated output not exceeding 5 kW, instead of being tied to a specific type of static power converter, may be designed for use with any static power converter, with or without external inductance, provided that the rated form factor for which the motor is designed will not be surpassed and that the insulation level of the motor armature circuit is appropriate for the rated alternating voltage at the input terminals of the static power converter.

In all cases, the undulation of the static power converter output current is assumed to be so low as to result in a current ripple factor not higher than 0,1 at rated conditions.

7.3 Voltage and frequency variations during operation

For a.c. machines rated for use on a power supply of fixed frequency supplied from an a.c. generator (whether local or via a supply network), combinations of voltage variation and frequency variation are classified as being either zone A or zone B, in accordance with Figure 11 for generators and synchronous condensers, and Figure 12 for motors.

For d.c. machines, when directly connected to a normally constant d.c. bus, zones A and B apply only to the voltages.

A machine shall be capable of performing its primary function, as specified in Table 4, continuously within zone A, but need not comply fully with its performance at rated voltage and frequency (see rating point in Figures 11 and 12), and may exhibit some deviations. Temperature rises may be higher than at rated voltage and frequency.

A machine shall be capable of performing its primary function within zone B, but may exhibit greater deviations from its performance at rated voltage and frequency than in zone A. Temperature rises may be higher than at rated voltage and frequency and most likely will be higher than those in zone A. Extended operation at the perimeter of zone B is not recommended.

~~NOTE 1~~ In practical applications and operating conditions, a machine will sometimes be required to operate outside the perimeter of zone A. Such excursions should be limited in value, duration and frequency of occurrence. Corrective measures should be taken, where practical, within a reasonable time, for example, a reduction in output. Such action may avoid a reduction in machine life from temperature effects.

AVA Documents
Document Sharing Hub

NOTE 1 The temperature-rise limits or temperature limits in accordance with this document apply at the rating point and may be progressively exceeded as the operating point moves away from the rating point. For conditions at the extreme boundaries of zone A, the temperature rises and temperatures typically exceed the limits specified in this document by approximately 10 K.

NOTE 2 An a.c. motor will start at the lower limit of voltage only if its starting torque is adequately matched to the counter-torque of the load, but this is not a requirement of this clause. For starting performance of design N motors, see IEC 60034-12.

NOTE 3 For machines covered by IEC 60034-3, different voltage and frequency limits apply.

Table 4 – Primary functions of machines

Item	Machine type	Primary function
1	AC generator, excluding item 5	Rated apparent power (kVA), at rated power factor where this is separately controllable
2	AC motor, excluding items 3 ~~and 5~~	Rated torque (Nm)
3	Synchronous motor~~, excluding item 5~~	Rated torque (Nm), the excitation maintaining either rated field current or rated power factor, where this is separately controllable
4	Synchronous condenser~~, excluding item 5~~	Rated ~~apparent~~ reactive power (kVAr) within the zone applicable to a generator, see Figure 11, unless otherwise agreed
5	~~Turbine-type machine~~ Synchronous generator driven by steam turbines or combustion gas turbines with rated output ≥10 MVA	See IEC 60034-3
6	DC generator	Rated output (kW)
7	DC motor	Rated torque (Nm), the excitation of a shunt motor maintaining rated speed, where this is separately controllable

Documents
Document Sharing Hub
Full document details: IEC 60034-1 2017 RLV

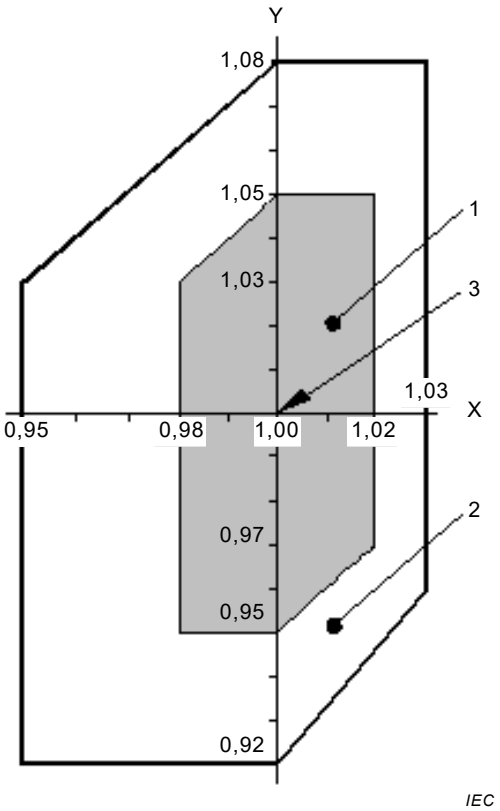

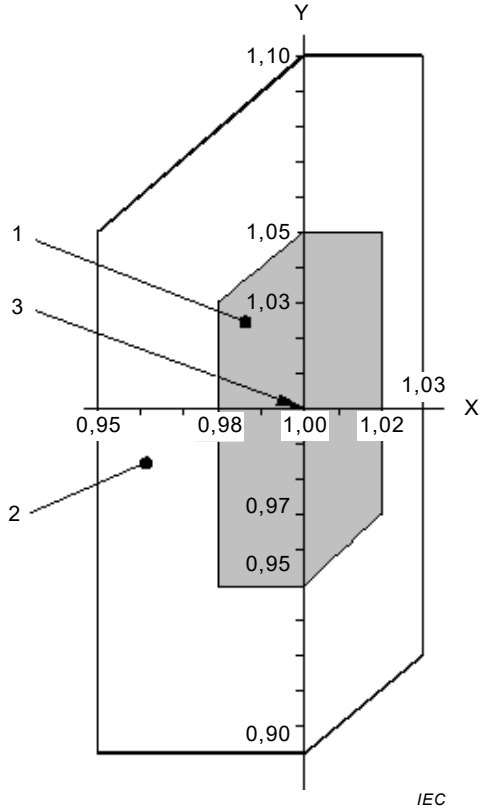

Key

X axis	frequency p.u.	1	zone A
Y axis	voltage p.u.	2	zone B (outside zone A)
		3	rating point

Figure 11 – Voltage and frequency limits for generators

Figure 12 – Voltage and frequency limits for motors

7.4 Three-phase a.c. machines operating on unearthed systems

Three-phase a.c. machines shall be suitable for continuous operation with the neutral at or near earth potential. They shall also be suitable for operation on unearthed systems with one line at earth potential for infrequent periods of short duration, for example as required for normal fault clearance. If it is intended to run the machine continuously or for prolonged periods in this condition, a machine with a level of insulation suitable for this condition will be required.

If the winding does not have the same insulation at the line and neutral ends, this shall be stated by the manufacturer.

~~NOTE~~ The earthing or interconnection of the machine's neutral points should not be undertaken without consulting the machine manufacturer because of the danger of zero-sequence components of currents of all frequencies under some operating conditions and the risk of mechanical damage to the windings under line-to-neutral fault conditions.

Documents
Document Sharing Hub
Full document details: IEC 60034-1 2017 RLV

7.5 Voltage (peak and gradient) withstand levels

For a.c. ~~motors~~ machines, the manufacturer shall declare a limiting value for the peak voltage and for the voltage gradient in continuous operation, if required by the customer.

~~For cage induction motors within the scope of IEC 60034-12, see also IEC 60034-17.~~

For machines used in power drive systems (PDS), see also IEC TS 60034-25.

For machines with a specified Impulse Voltage Insulation Class IVIC, see IEC 60034-18-41 in the case of machines designed to operate without partial discharges.

For high-voltage a.c. ~~motors~~ machines, see also IEC 60034-15.

For creepage and clearance distances of bare live copper, see IEC 60664-1.

8 Thermal performance and tests

8.1 Thermal class

A thermal class in accordance with IEC 60085 shall be assigned to the insulation systems used in machines.

It is the responsibility of the manufacturer of the machine to interpret the results obtained by thermal endurance testing according to the appropriate part of IEC 60034-18.

NOTE 1 The thermal class of a new insulation system should not be assumed to be directly related to the thermal capability of the individual materials used in it.

NOTE 2 The continued use of an existing insulation system is acceptable where it has been proved by satisfactory service experience.

8.2 Reference coolant

The reference coolant for a given method of cooling the machine is specified in Table 5.

Documents
Document Sharing Hub

Full document details: IEC 60034-1 2017 RLV

Table 5 – Reference coolant (see also Table 11)

Item	Primary coolant	Method of cooling	Secondary coolant	Table number	Table referred to in column 5 specifies limits of:	Reference coolant
1	Air	Indirect	None	7	Temperature rise	Ambient air Reference temperature: 40 °C
2	Air	Indirect	Air	7		
3	Air	Indirect	Water	7		Coolant at inlet to machine or ambient water reference temperature of cooling gas at inlet to machine: 40 °C Reference temperature of ambient water: 25 °C (see note)
4	Hydrogen	Indirect	Water	8		
5	Air	Direct	None	12	Temperature	Ambient air Reference temperature: 40 °C
6	Air	Direct	Air	12		
7	Air	Direct	Water	12		Gas at entry to machine or liquid at entry to the windings Reference temperature: 40 °C
8	Hydrogen or liquid	Direct	Water	12		
NOTE A machine with indirect cooled windings and a water cooled heat exchanger may be rated using either the primary or secondary coolant as the reference coolant (see also 10.2 for information to be given on the rating plate). A submersible machine with surface cooling or a machine with water jacket cooling should be rated using the secondary coolant as reference coolant.						

If a third coolant is used, temperature rise shall be measured above the temperature of the primary or secondary coolant as specified in Table 5.

NOTE A machine may be so arranged and cooled that more than one item of Table 5 applies, in which case different reference coolants may apply for different windings.

8.3 Conditions for thermal tests

8.3.1 Electrical supply

During thermal testing of an a.c. ~~motor~~ machine the HVF of the supply shall not exceed 0,015 and the negative-sequence component of the system of voltages shall be less than 0,5 % of the positive-sequence component, the influence of the zero-sequence component being eliminated.

By agreement, the negative-sequence component of the system of currents may be measured instead of the negative-sequence component of the system of voltages. The negative-sequence component of the system of currents shall not exceed 2,5 % of the positive-sequence component.

8.3.2 Temperature of machine before test

If the temperature of a winding is to be determined from the increase of resistance, the initial winding temperature shall not differ from the coolant by more than 2 K.

When a machine is to be tested on a short-time rating (duty type S2) its temperature at the beginning of the thermal test shall be within 5 K of the temperature of the coolant.

Documents
Document Sharing Hub
Full document details: IEC 60034-1 2017 RLV

8.3.3 Temperature of coolant

A machine may be tested at any convenient value of coolant temperature. See Table 12 (for indirect cooled windings) or Table 15 (for direct cooled windings).

8.3.4 Measurement of coolant temperature during test

8.3.4.1 General

The value to be adopted for the temperature of a coolant during a test shall be the mean of the readings of the temperature detectors taken at equal intervals of time during the last quarter of the duration of the test. To reduce errors due to the time lag of the change of temperature of large machines following variations in the temperature of the coolant, all reasonable precautions shall be taken to minimize such variations.

8.3.4.2 ~~Open machines or~~ Closed machines without heat exchangers (cooled by surrounding ambient air or gas)

The temperature of the ambient air or gas shall be measured by means of several detectors placed at different points around and halfway up the machine at 1 m to 2 m from it. Each detector shall be protected from radiant heat and draughts.

8.3.4.3 Open machines and machines cooled by air or gas from a remote source through ventilation ducts and machines with separately mounted heat exchangers

The temperature of the primary coolant shall be measured where it enters the machine.

8.3.4.4 Closed machines with machine-mounted or internal heat exchangers

The temperature of the primary coolant shall be measured where it enters the machine. The temperature of the secondary coolant shall be measured where it enters the heat exchanger.

8.4 Temperature rise of a part of a machine

The temperature rise, $\Delta\theta$, of a part of a machine is the difference between the temperature of that part measured by the appropriate method in accordance with 8.5, and the temperature of the coolant measured in accordance with 8.3.4.

For comparison with the limits of temperature rise (see Table 8 or Table 9) or of temperature (see Table 13), when possible, the temperature shall be measured immediately before the machine is shut down at the end of the thermal test, as described in 8.7.

When this is not possible, for example, when using the direct measurement of resistance method, see 8.6.2.3.

For machines tested on actual periodic duty (duty types S3 to S8) the temperature at the end of the test shall be taken as that at the middle of the rise period causing the greatest heating in the last cycle of operation (but see also 8.7.3).

8.5 Methods of measurement of temperature

8.5.1 General

Three methods of measuring the temperature of windings and other parts are recognized:

– resistance method;
– embedded temperature detector (ETD) method;
– thermometer method.

Documents
Document Sharing Hub

Full document details: IEC 60034-1 2017 RLV

Different methods shall not be used as a check upon one another.

For indirect testing see IEC 60034-29.

8.5.2 Resistance method

The temperature of the windings is determined from the increase of the resistance of the windings.

8.5.3 Embedded temperature detector (ETD) method

The temperature is determined by means of temperature detectors (e.g. resistance thermometers, thermocouples or semi-conductor negative coefficient detectors) built into the machine during construction, at points which are inaccessible after the machine is completed.

8.5.4 Thermometer method

The temperature is determined by thermometers applied to accessible surfaces of the completed machine. The term 'thermometer' includes not only bulb-thermometers, but also non-embedded thermocouples and resistance thermometers. When bulb-thermometers are used in places where there is a strong varying or moving magnetic field, alcohol thermometers shall be used in preference to mercury thermometers.

8.6 Determination of winding temperature

8.6.1 Choice of method

In general, for measuring the temperature of the windings of a machine, the resistance method in accordance with 8.5.2 shall be applied (but see also 8.6.2.3.3).

For a.c. stator windings of machines having a rated output of 5 000 kW (or kVA) or more the ETD method shall be used.

For a.c. stator windings of machines having a rated output less than 5 000 kW (or kVA) but greater than 200 kW (or kVA) the manufacturer shall choose either the resistance or the ETD method, unless otherwise agreed.

For a.c. stator windings of machines having a rated output less than or equal to 200 kW (or kVA) the manufacturer shall choose the direct measurement version or the superposition version of the resistance method (see 8.6.2.1), unless otherwise agreed (but see also below).

For machines having a rated output less than or equal to 600 W (or VA), when the windings are non-uniform or severe complications are involved in making the necessary connections, the temperature may be determined by means of thermometers. Temperature rise limits in accordance with Table 8, item 1d) for resistance method shall apply.

The thermometer method is recognized in the following cases:

a) when it is not practicable to determine the temperature rise by the resistance method as, for example, with low-resistance commutating coils and compensating windings and, in general, in the case of low-resistance windings, especially when the resistance of joints and connections forms a considerable proportion of the total resistance;

b) single layer windings, rotating or stationary;

c) during routine tests on machines manufactured in large numbers.

For a.c. stator windings having only one coil-side per slot, the ETD method shall not be used for verifying compliance with this document: the resistance method shall be used.

Documents
Document Sharing Hub

Full document details: IEC 60034-1 2017 RLV

NOTE For checking the temperature of such windings in service, an embedded detector at the bottom of the slot is of little value because it gives mainly the temperature of the iron core. A detector placed between the coil and the wedge will follow the temperature of the winding much more closely and is, therefore, better for checks in service. Because the temperature there may be rather low, the relation between it and the temperature measured by the resistance method should be determined by a thermal test.

For other windings having one coil-side per slot and for end windings, the ETD method shall not be used for verifying compliance with this document.

For windings of armatures having commutators and for field windings, the resistance method ~~and the thermometer method are~~ is recognized. ~~The resistance method is preferred, but~~ For stationary field windings of d.c. machines having more than one layer the ETD method may be used.

8.6.2 Determination by resistance method

8.6.2.1 Measurement

One of the following methods shall be used:

– direct measurement at the beginning and the end of the test, using an instrument having a suitable range;

– measurement by d.c. current/voltage in d.c. windings, by measuring the current in and the voltage across the winding, using instruments having suitable ranges;

– measurement by d.c. current/voltage in a.c. windings, by injecting direct current into the winding when de-energized;

– Measurement by d.c. current/voltage in a.c. windings, by superposing small amount of d.c. current into the winding, when energized.

8.6.2.2 Calculation

The temperature rise, $\theta_2 - \theta_a$, may be obtained from the formula:

$$\frac{\theta_2 + k}{\theta_1 + k} = \frac{R_2}{R_1}$$

where

θ_1 is the temperature (°C) of the winding (cold) at the moment of the initial resistance measurement;

θ_2 is the temperature (°C) of the winding at the end of the thermal test;

θ_a is the temperature (°C) of the coolant at the end of the thermal test;

R_1 is the resistance of the winding at temperature θ_1 (cold);

R_2 is the resistance of the winding at the end of the thermal test;

k is the reciprocal of the temperature coefficient of resistance at 0 °C of the conductor material.

For copper k = 235

For aluminium k = 225 unless specified otherwise.

For practical purposes, the following alternative formula may be found convenient:

$$\theta_2 - \theta_a = \frac{R_2 - R_1}{R_1} \times (k + \theta_1) + \theta_1 - \theta_a$$

Documents
Document Sharing Hub
Full document details: IEC 60034-1 2017 RLV

8.6.2.3 Correction for stopping time

8.6.2.3.1 General

The measurement of temperatures at the end of the thermal test by the direct measurement resistance method requires a quick shutdown. A carefully planned procedure and an adequate number of people are required.

8.6.2.3.2 Short stopping time

If the initial resistance reading is obtained within the time interval specified in Table 6, that reading shall be accepted for the temperature measurement.

Table 6 – Time interval

Rated output (P_N) kW or kVA	Time interval after switching off power s
$P_N \leq 50$	30
$50 < P_N \leq 200$	90
$200 < P_N \leq 5\,000$	120
$5\,000 < P_N$	By agreement

8.6.2.3.3 Extended stopping time

If a resistance reading cannot be made in the time interval specified in Table 6, it shall be made as soon as possible but not after more than twice the interval specified in Table 6, and additional readings shall be taken at intervals of approximately 1 min until these readings have begun a distinct decline from their maximum value. A curve of these readings shall be plotted as a function of time and extrapolated to the appropriate time interval of Table 6 for the rated output of the machine. A semi-logarithmic plot is recommended where temperature or resistance is plotted on the logarithmic scale. The value of temperature thus obtained shall be considered as the temperature at shutdown. If successive measurements show increasing temperatures after shutdown the highest value shall be taken.

If a resistance reading cannot be made until after twice the time interval specified in Table 6, this method of correction shall only be used by agreement.

8.6.2.3.4 Windings with one coil-side per slot

For machines with one coil-side per slot, the resistance method by direct measurement may be used if the machine comes to rest within the time interval specified in Table 6. If the machine takes more than 90 s to come to rest after switching off the power, the superposition method (see 8.6.2.1) may be used if previously agreed.

8.6.3 Determination by ETD method

8.6.3.1 General

The detectors shall be suitably distributed throughout the winding and the number of detectors installed shall be not less than six.

All reasonable efforts, consistent with safety, shall be made to place the detectors at the points where the highest temperatures are likely to occur, in such a manner that they are effectively protected against contact with the primary coolant.

The highest reading from the ETD elements shall be used to determine the temperature of the winding.

Documents
Document Sharing Hub
Full document details: IEC 60034-1 2017 RLV

~~NOTE~~ ETD elements or their connections may fail and give incorrect readings. Therefore, if one or more readings are shown to be erratic, after investigation they should be eliminated.

8.6.3.2 Two or more coil-sides per slot

The detectors shall be located between the insulated coil-sides within the slot in positions at which the highest temperatures are likely to occur.

8.6.3.3 One coil-side per slot

The detectors shall be located between the wedge and the outside of the winding insulation in positions at which the highest temperatures are likely to occur, but see also 8.6.1.

8.6.3.4 End windings

The temperature detectors shall be located between two adjacent coil-sides within the end windings in positions where the highest temperatures are likely to occur. The sensing point of each detector shall be in close contact with the surface of a coil-side and be adequately protected against the influence of the coolant, but see also 8.6.1.

When placing a temperature detector in the end windings of high voltage machines, care shall be taken that the stress grading of the insulation is not compromised and that the difference of potential along the winding overhang does not cause problems. In addition, the ground of the measuring system is thus directly capacitive coupled to the HV-system. Disconnection of the measurement ground will in this case immediately lead to over voltages on the measuring system. Measures have to be taken to prevent consequential damage up to lethal injuries.

NOTE If the stator winding is a direct liquid cooled bar type, a temperature detector installed in the nozzle area of each bar monitoring water outlet temperature can give an indication of conductor strand cooling passage blocking.

8.6.4 Determination by thermometer method

All reasonable efforts, consistent with safety, shall be made to place thermometers at the point, or points where the highest temperatures are likely to occur (e.g. in the end windings close to the core iron) in such a manner that they are effectively protected against contact with the primary coolant and are in good thermal contact with the winding or other part of the machine.

The highest reading from any thermometer shall be taken to be the temperature of the winding or other part of the machine.

8.7 Duration of thermal tests

8.7.1 Rating for continuous running duty

The test shall be continued until thermal equilibrium has been reached.

8.7.2 Rating for short-time duty

The duration of the test shall be the time given in the rating.

8.7.3 Rating for periodic duty

Normally the rating for equivalent loading assigned by the manufacturer (see 5.2.6) shall be applied until thermal equilibrium has been reached. If a test on the actual duty is agreed, the load cycle specified shall be applied and continued until practically identical temperature cycles are obtained. The criterion for this shall be that a straight line between the corresponding points of successive duty cycles on a temperature plot has a gradient of less than ~~2~~ 1 K per half hour. If necessary, measurements shall be taken at reasonable intervals over a period of time (see 3.25).

AVA Documents Document Sharing Hub

Full document details: IEC 60034-1 2017 RLV

8.7.4 Ratings for non-periodic duty and for duty with discrete constant loads

The rating for equivalent loading assigned by the manufacturer (see 5.2.6) shall be applied until thermal equilibrium has been reached.

8.8 Determination of the thermal equivalent time constant for machines of duty type S9

The thermal equivalent time constant with ventilation as in normal operating conditions, suitable for approximate determination of the temperature course, can be determined from the cooling curve plotted in the same manner as in 8.6.2.3. The value of the time constant is 1,44 times (that is to say, 1/ln(2) times) the time taken by the machine to cool to one-half of the full load temperature rise, after its disconnection from the supply.

8.9 Measurement of bearing temperature

Either the thermometer method or the ETD method may be used.

The measuring point shall be as near as possible to one of the two locations specified in Table 7.

Table 7 – Measuring points

Type of bearing	Measuring point	Location of measuring point
Ball or roller	A	In the bearing housing ~~and~~ preferably in contact with the outer ring of the bearing, but not more than 10 mm[a] from ~~the outer ring of the bearing~~ it[b]
	B	Outer surface of the bearing housing as close as possible to the outer ring of the bearing
Sleeve or tilting pad	A	In the pressure zone of the bearing shell[c] and not more than 10 mm[a] from the oil-film gap[b].
	B	Elsewhere in the bearing shell

[a] The distance is measured to the nearest point of the ETD or thermometer bulb.

[b] In the case of an 'inside out' machine, point A will be in the stationary part not more than 10 mm from the inner ring and point B on the outer surface of the stationary part as close as possible to the inner ring.

[c] The bearing shell is the part supporting the bearing material and which is secured in the housing. The pressure zone is the portion of the circumference which supports the combination of rotor weight and radial loads.

The thermal resistance between the temperature detector and the object whose temperature is to be measured shall be minimized; for example, air gaps shall be packed with thermally conducting paste.

NOTE Between the measuring points A and B, as well as between these points and the hottest point of the bearing, there are temperature differences which depend, among other things, on the bearing size. For sleeve bearings with pressed-in bushings and for ball and roller bearings with an inside diameter of up to 150 mm, the temperature difference between points A and B may be assumed to be negligible. In the case of larger bearings, the temperature difference between measuring points A and B is approximately 15 K.

8.10 Limits of temperature and of temperature rise

8.10.1 General

Limits are given for operation under site operating conditions specified in Clause 6 and at rating for continuous running duty (reference conditions), followed by rules for the adjustment of those limits when operating at site under other conditions and on other ratings. Further rules give adjustments to the limits during thermal testing when conditions at the test site differ from those at the operating site.

Documents
Document Sharing Hub
Full document details: IEC 60034-1 2017 RLV

It is understood that the temperature of the hottest point of each winding under reference conditions, i. e. the rated conditions, generally does not exceed the agreed thermal class temperature of the insulation system.

The limits are stated relative to the reference coolant specified in Table 5.

A rule is given to allow for the purity of hydrogen coolant.

8.10.2 Indirect cooled windings

Temperature rises under reference conditions shall not exceed the limits given in Table 8 (air coolant) or Table 9 (hydrogen coolant) as appropriate for both, ETD and R method if applicable.

NOTE The measured temperature differences between method ETD and method R may be significantly higher or lower than the temperature limits specified in Table 8 or Table 9, depending on the machine design and the cooling system. It is not intended to compare ETD and R method against each other.

For other operating site conditions, for ratings other than continuous running duty, and for rated voltages greater than 12 000 V, the limits shall be adjusted according to Table 10. (See also Table 11 for limit on coolant temperature which is assumed in Table 10.)

In the case of thermometer readings made in accordance with 8.6.1, the limit of temperature rise shall be according to Table 8.

If, for windings indirectly cooled by air, conditions at the test site differ from those at the operating site, the adjusted limits given in Table 12 shall apply at the test site.

If the adjusted limits given in Table 12 lead to permissible temperatures at the test site which the manufacturer considers to be excessive, the testing procedure and the limits shall be agreed.

No adjustments at the test site are given for windings indirectly cooled by hydrogen, because it is very unlikely that they will be tested at rated load anywhere other than at the operating site.

Documents
Document Sharing Hub
Full document details: IEC 60034-1 2017 RLV