IEC 60034-14

Edition 4.0 2018-08
REDLINE VERSION

INTERNATIONAL STANDARD

colour inside

Rotating electrical machines –
Part 14: Mechanical vibration of certain machines with shaft heights 56 mm and higher – Measurement, evaluation and limits of vibration severity

IEC 60034-14:2018-08 RLV(en)

Documents
Document Sharing Hub

Full document details: IEC 60034-14-2018

THIS PUBLICATION IS COPYRIGHT PROTECTED
Copyright © 2018 IEC, Geneva, Switzerland

All rights reserved. Unless otherwise specified, no part of this publication may be reproduced or utilized in any form or by any means, electronic or mechanical, including photocopying and microfilm, without permission in writing from either IEC or IEC's member National Committee in the country of the requester. If you have any questions about IEC copyright or have an enquiry about obtaining additional rights to this publication, please contact the address below or your local IEC member National Committee for further information.

IEC Central Office
3, rue de Varembé
CH-1211 Geneva 20
Switzerland

Tel.: +41 22 919 02 11
info@iec.ch
www.iec.ch

About the IEC
The International Electrotechnical Commission (IEC) is the leading global organization that prepares and publishes International Standards for all electrical, electronic and related technologies.

About IEC publications
The technical content of IEC publications is kept under constant review by the IEC. Please make sure that you have the latest edition, a corrigenda or an amendment might have been published.

IEC Catalogue - webstore.iec.ch/catalogue
The stand-alone application for consulting the entire bibliographical information on IEC International Standards, Technical Specifications, Technical Reports and other documents. Available for PC, Mac OS, Android Tablets and iPad.

IEC publications search - webstore.iec.ch/advsearchform
The advanced search enables to find IEC publications by a variety of criteria (reference number, text, technical committee,…). It also gives information on projects, replaced and withdrawn publications.

IEC Just Published - webstore.iec.ch/justpublished
Stay up to date on all new IEC publications. Just Published details all new publications released. Available online and also once a month by email.

Electropedia - www.electropedia.org
The world's leading online dictionary of electronic and electrical terms containing 21 000 terms and definitions in English and French, with equivalent terms in 16 additional languages. Also known as the International Electrotechnical Vocabulary (IEV) online.

IEC Glossary - std.iec.ch/glossary
67 000 electrotechnical terminology entries in English and French extracted from the Terms and Definitions clause of IEC publications issued since 2002. Some entries have been collected from earlier publications of IEC TC 37, 77, 86 and CISPR.

IEC Customer Service Centre - webstore.iec.ch/csc
If you wish to give us your feedback on this publication or need further assistance, please contact the Customer Service Centre: sales@iec.ch.

Documents
Document Sharing Hub

Full document details: IEC 60034-14-2018

IEC 60034-14

Edition 4.0 2018-08
REDLINE VERSION

INTERNATIONAL STANDARD

colour inside

Rotating electrical machines –
Part 14: Mechanical vibration of certain machines with shaft heights 56 mm and higher – Measurement, evaluation and limits of vibration severity

INTERNATIONAL
ELECTROTECHNICAL
COMMISSION

ICS 29.160.01

ISBN 978-2-8322-5995-5

Warning! Make sure that you obtained this publication from an authorized distributor.

® Registered trademark of the International Electrotechnical Commission

Documents
Document Sharing Hub

Full document details: IEC 60034-14-2018

CONTENTS

FOREWORD 4
1 Scope 6
2 Normative references 6
3 Terms and definitions 7
4 Measurement quantities 7
4.1 General 7
4.2 Vibration magnitude 7
4.3 Relative shaft vibration 7
5 Measurement equipment 7
6 Machine mounting 8
6.1 General 8
6.2 Free suspension 8
6.3 Rigid mounting 8
6.3.1 Foundation 8
6.3.2 Horizontal machines 9
6.3.3 Vertical machines 10
6.4 Active environment determination 10
7 Conditions of measurement 10
7.1 Key 10
7.2 Measurement positions and directions 10
7.2.1 Measurement positions for vibration 10
7.2.2 Measurement positions for relative shaft displacement 10
7.3 Test conditions 11
7.4 Vibration transducer 11
8 Limits of bearing housing vibration 11
8.1 Limits of vibration magnitude 11
8.2 Limits of vibration velocity with twice-line frequency for a.c. machines 13
8.3 Axial vibration 13
9 Limits of relative shaft vibration 13
Bibliography 20

Figure 1 – Minimum elastic displacement as a function of rated speed 15
Figure 2 – Preferred positions of measurement applicable to one or both ends of the machine 16
Figure 3 – Measurement positions for those ends of machines where measurements according to Figure 2 are not possible without disassembly of parts 16
Figure 4 – Measurement positions for pedestal bearing 17
Figure 5 – Preferred circumferential position of transducers for the measurement of relative shaft displacement 17
Figure 6 – Measurement positions for vertical machines (measurements to be made at the bearing housing; when not accessible, then as close as possible) 18
Figure 7 – Vibration limit diagram for shaft heights H > 132 mm 19

Table 1 – Limits of maximum vibration magnitude in displacement (r.m.s.) and velocity (r.m.s.) ~~and acceleration (r.m.s.)~~ for shaft height H 12

Documents
Document Sharing Hub
Full document details: IEC 60034-14-2018

Table 2 – Limits for the maximum shaft vibration ($S_{p\text{-}p}$) and the maximum run-out.....14

Documents
Document Sharing Hub

Full document details: IEC 60034-14-2018

INTERNATIONAL ELECTROTECHNICAL COMMISSION

ROTATING ELECTRICAL MACHINES –

Part 14: Mechanical vibration of certain machines with shaft heights 56 mm and higher – Measurement, evaluation and limits of vibration severity

FOREWORD

1) The International Electrotechnical Commission (IEC) is a worldwide organization for standardization comprising all national electrotechnical committees (IEC National Committees). The object of IEC is to promote international co-operation on all questions concerning standardization in the electrical and electronic fields. To this end and in addition to other activities, IEC publishes International Standards, Technical Specifications, Technical Reports, Publicly Available Specifications (PAS) and Guides (hereafter referred to as "IEC Publication(s)"). Their preparation is entrusted to technical committees; any IEC National Committee interested in the subject dealt with may participate in this preparatory work. International, governmental and non-governmental organizations liaising with the IEC also participate in this preparation. IEC collaborates closely with the International Organization for Standardization (ISO) in accordance with conditions determined by agreement between the two organizations.
2) The formal decisions or agreements of IEC on technical matters express, as nearly as possible, an international consensus of opinion on the relevant subjects since each technical committee has representation from all interested IEC National Committees.
3) IEC Publications have the form of recommendations for international use and are accepted by IEC National Committees in that sense. While all reasonable efforts are made to ensure that the technical content of IEC Publications is accurate, IEC cannot be held responsible for the way in which they are used or for any misinterpretation by any end user.
4) In order to promote international uniformity, IEC National Committees undertake to apply IEC Publications transparently to the maximum extent possible in their national and regional publications. Any divergence between any IEC Publication and the corresponding national or regional publication shall be clearly indicated in the latter.
5) IEC itself does not provide any attestation of conformity. Independent certification bodies provide conformity assessment services and, in some areas, access to IEC marks of conformity. IEC is not responsible for any services carried out by independent certification bodies.
6) All users should ensure that they have the latest edition of this publication.
7) No liability shall attach to IEC or its directors, employees, servants or agents including individual experts and members of its technical committees and IEC National Committees for any personal injury, property damage or other damage of any nature whatsoever, whether direct or indirect, or for costs (including legal fees) and expenses arising out of the publication, use of, or reliance upon, this IEC Publication or any other IEC Publications.
8) Attention is drawn to the Normative references cited in this publication. Use of the referenced publications is indispensable for the correct application of this publication.
9) Attention is drawn to the possibility that some of the elements of this IEC Publication may be the subject of patent rights. IEC shall not be held responsible for identifying any or all such patent rights.

This redline version of the official IEC Standard allows the user to identify the changes made to the previous edition. A vertical bar appears in the margin wherever a change has been made. Additions are in green text, deletions are in strikethrough red text.

Documents
Document Sharing Hub

Full document details: IEC 60034-14-2018

International Standard IEC 60034-14 has been prepared by IEC technical committee 2: Rotating machinery.

This fourth edition cancels and replaces the third edition, published in 2003, and its amendment 1, published in 2007. It constitutes a technical revision.

The significant technical changes with respect to the previous edition are:

a) 6.2 is significantly changed to better explain the definition “free suspension”.
b) 6.3: a second method of rigid mount is added since the first method is not always possible on the test floor.
c) 7.1: an improved option for shaft key is defined.
d) Clause 8: considerable effort to harmonize with NEMA MG 1 and IEEE 841 and API 541, and also establish levels which are achievable and more in line with best practices. Table 1 is reduced to two shaft-height range sections.
e) 8.2: definition of twice line frequency simplified along with Figure 7 added.

The text of this International Standard is based on the following documents:

FDIS	Report on voting
2/1906/FDIS	2/1914/RVD

Full information on the voting for the approval of this International Standard can be found in the report on voting indicated in the above table.

This document has been drafted in accordance with the ISO/IEC Directives, Part 2.

A list of all parts in the IEC 60034 series, published under the general title *Rotating electrical machines*, can be found on the IEC website.

NOTE For A table of cross-references of all IEC TC 2 publications can be found in the IEC TC 2 dashboard on the IEC website.

The committee has decided that the contents of this document will remain unchanged until the stability date indicated on the IEC website under "http://webstore.iec.ch" in the data related to the specific document. At this date, the document will be

- reconfirmed,
- withdrawn,
- replaced by a revised edition, or
- amended.

IMPORTANT – The “colour inside” logo on the cover page of this publication indicates that it contains colours which are considered to be useful for the correct understanding of its contents. Users should therefore print this publication using a colour printer.

Documents
Document Sharing Hub

Full document details: IEC 60034-14-2018

ROTATING ELECTRICAL MACHINES –

Part 14: Mechanical vibration of certain machines with shaft heights 56 mm and higher – Measurement, evaluation and limits of vibration severity

1 Scope

This part of IEC 60034 specifies the factory acceptance vibration test procedures and vibration limits for certain electrical machines under specified conditions, when uncoupled from any load or prime mover.

It is applicable to DC and three-phase AC machines, with shaft heights 56 mm and higher and a rated output up to 50 MW, at operational speeds from 120 min^{-1} up to and including 15 000 min^{-1}.

This document is not applicable to machines mounted *in situ* (on site), three-phase commutator motors, single-phase machines, three-phase machines operated on single-phase systems, vertical waterpower generators, turbine generators greater than 20 MW and machines with magnetic bearings or series-wound machines.

NOTE For machines measured *in situ,* refer to applicable parts of ISO 20816, ISO 10816 and ISO 7919.

2 Normative references

The following documents are referred to in the text in such a way that some or all of their content constitutes requirements of this document. For dated references, only the edition cited applies. For undated references, the latest edition of the referenced document (including any amendments) applies.

IEC 60034-1, *Rotating electrical machines – Part 1: Rating and performance*

IEC 60034-7, *Rotating electrical machines – Part 7: Classification of types ofconstructions and mounting arrangements ~~and terminal box position~~ (IM Code)*

ISO 2954, *Mechanical vibration of rotating and reciprocating machinery – Requirements for instruments for measuring vibration severity*

~~ISO 7919-1, *Mechanical vibration of non-reciprocating machines – Measurements on rotating shafts and evaluation criteria – Part 1: General guidelines*~~

~~ISO 8821, *Mechanical vibration – Balancing – Shaft and fitment key convention*~~

ISO 10817-1, *Rotating shaft vibration measuring systems – Part 1: Relative and absolute sensing of radial vibration from rotating shafts*

ISO 20816-1, *Mechanical vibration – Measurement and evaluation of machine vibration – Part 1: General guidelines*

ISO 21940-32, *Mechanical vibration – Rotor balancing – Part 32: Shaft and fitment key convention*

Documents
Document Sharing Hub

Full document details: IEC 60034-14-2018

3 Terms and definitions

For the purposes of this document, the terms and definitions given in IEC 60034-1 apply.

ISO and IEC maintain terminological databases for use in standardization at the following addresses:

- IEC Electropedia: available at http://www.electropedia.org/
- ISO Online browsing platform: available at http://www.iso.org/obp

4 Measurement quantities

4.1 General

Measurement quantities are the vibration displacement~~, vibration acceleration~~ and vibration velocity at the machine bearings and the relative shaft vibration displacement within or near to the machine bearings.

4.2 Vibration magnitude

The criterion for the vibration magnitude at the machine bearings shall be the broadband r.m.s. value of the vibration displacement in micrometres or the vibration velocity in millimeters per second~~ and the vibration acceleration in meters per second squared~~ in the frequency range specified in Clause 5. The~~ greatest~~ maximum value, determined at the prescribed measurement positions and prescribed measuring variable, according to this standard, characterizes the vibration magnitude of the machine.

Induction motors (especially of two pole type) frequently show vibration beating at twice slip frequency. In these cases, the decisive vibration magnitude shall be determined from the relationship:

$$x_{\text{r.m.s.}} = \sqrt{\frac{x_{\max}^{\ 2} + x_{\min}^{\ 2}}{2}}$$

where

$x_{\max}$ is the maximum r.m.s. value of vibration displacement or vibration velocity~~ or acceleration~~;

$x_{\min}$ is the minimum r.m.s. value of vibration displacement or vibration velocity~~ or acceleration~~.

The sample rate shall be chosen large enough to reliably capture the maximum and minimum values of the vibration.

NOTE Large AC induction machines running at very low slip values at no load may require several minutes to more than ten minutes for such measurements to be completed at each vibration measuring position.

4.3 Relative shaft vibration

The criterion adopted for the relative shaft vibration shall be the vibratory displacement $S_{\text{p-p}}$ in the direction of measurement from~~ ISO 7919-1~~ ISO 20816-1.

5 Measurement equipment

The measurement equipment shall be capable of measuring broadband r.m.s. vibration with flat response over a frequency range of~~ at least~~ 10 Hz to 1 000 Hz, in accordance with the

AVA Documents
Document Sharing Hub
Full document details: IEC 60034-14-2018

requirements of ISO 2954. However, for machines with speeds approaching or below 600 min^{-1}, the lower limit of the flat response frequency range shall not be greater than 2 Hz.

Measurement equipment for relative shaft vibration measurements shall comply with the requirements in ISO 10817-1.

Multi-directional vibration sensors shall not be used.

NOTE Multi-directional sensors do not provide proper vibration measurement in all directions when mounted in only one location.

6 Machine mounting

6.1 General

The vibration of an electrical machine is closely linked with the mounting of the machine. To permit evaluation as far as balance and vibration of rotating electrical machines are concerned, it is necessary to measure the vibration on the machine alone, under properly determined test conditions, to enable reproducible tests to be carried out and to provide comparable measurements.

6.2 Free suspension

This condition is achieved by suspending the machine on a spring or by mounting on an elastic support (springs, rubber, etc.).

The highest natural oscillation frequency (f_{no}) of the suspension system and machine~~, in the six possible degrees of freedom~~, shall be less than 1/3 of the frequency f_1 corresponding to the speed of the machine under test, as defined in 7.3. Based on the mass of the machine being tested, the necessary elasticity of the suspension system as a function of ~~nominal~~ rated speed from 600 min^{-1} to 3 600 min^{-1} can be determined from Figure 1. For speeds lower than 600 min^{-1} measurements in free suspension are not practical. For speeds greater than 3 600 min^{-1}, the static displacement Z should be not less than the value for 3 600 min^{-1}.

The curve in Figure 1 presents the minimum elastic displacement to attain the necessary vertical rigid body natural oscillation, which is usually the highest rigid body natural frequency. Static displacement Z is expressed as:

$$Z = \frac{a^2 g}{(2\pi n)^2} \qquad , a = \frac{f_1}{f_{no}};\ a \geq 3$$

where

Z is the displacement in m,

n is the rated speed in units of s^{-1}, and

g is the acceleration of gravity (9,81 m/s^2).

When a is set to 3, then the curve in Figure 1 is generated.

6.3 Rigid mounting

6.3.1 Foundation

6.3.1.1 General

~~The maximum vibration velocity measured in the horizontal and vertical directions at the machine feet (or at the base frame near to the bearing pedestals or stator feet) shall not~~

AVA Documents
Document Sharing Hub

~~exceed 25 % of the maximum velocity, which is measured at the adjacent bearing housing in the same measurement direction.~~

~~NOTE 1 This requirement ensures that the horizontal and vertical natural frequencies of the complete test arrangement do not coincide within:~~

~~a) ±10 % of the rotational frequency of the machine;~~

~~b) ± 5 % of twice the rotational frequency, or~~

~~c) ± 5 % of once and twice the electrical line frequency.~~

~~NOTE 2 The ratio of 25 % of foot to bearing vibration velocities is valid for once per revolution vibration and the vibration at twice the line frequency (if the latter is being evaluated).~~

During the shop running test of the assembled machine, vibration measurements shall be made with the machine properly shimmed and securely fastened to a massive foundation or test floor stand. Elastic mounts are not permitted.

The horizontal and vertical natural frequencies of the complete test arrangement shall not coincide within:

a) ± 10 % of the rotational frequency of the machine;

b) ± 5 % of twice the rotational frequency, or

c) ± 5 % of once and twice the electrical line frequency.

Either one of the following two mounting conditions may be chosen by the manufacturer.

6.3.1.2 Rigid mounting on massive foundation

One indication of massive foundation is when the vibration velocity measured in the horizontal and vertical directions at the machine feet (or at the base frame near to the bearing pedestals or stator feet) does not exceed 30 % of the maximum velocity, which is measured at the adjacent bearing housing in the same measurement direction. The ratio of foot to bearing vibration velocities is valid for the rotational frequency component or twice-line frequency component (if the latter is being evaluated).

NOTE 1 The rigidity of a foundation is a relative quantity. It is compared with the rigidity of the machine bearing system. The ratio of bearing housing vibration to foundation vibration is a characteristic quantity for the evaluation of foundation flexibility.

NOTE 2 If the machine is to be supported in the field by a structure other than a massive foundation, it may be necessary to perform a system dynamic analysis to make the necessary changes to the foundation dynamic stiffness.

6.3.1.3 Rigid mounting on test floor stand

This condition is achieved by mounting the machine on an adequately rigid test foundation free of resonances at forcing frequencies, see 6.3.1.1.

NOTE This mounting is the most used in manufacturers test labs.

6.3.2 Horizontal machines

~~The machine under test shall be:~~

- ~~clamped directly to a solid floor, or~~
- ~~through its mounting base plate to a solid floor, or~~
- ~~to a rigid plate that meets the requirements of 6.3.1.~~

The machine under test shall be bolted or clamped using all bolt-hole positions to a foundation that meets the requirements of 6.3.1.2 or 6.3.1.3.

AVA Documents
Document Sharing Hub

There are constructions and mountings in which the above fixing conditions cannot be met, such as single-bearing machines. In those cases there should be an agreement between the supplier and customer.

6.3.3 Vertical machines

Vertical machines shall be mounted onto a solid rectangular or circular steel plate with a bore hole in the centre of the shaft extension, a machined surface for the flange of electrical machine being measured and ~~tapped holes for the flange bolts~~ holes provided for fasteners or clamps. The steel plate thickness shall be at least three times greater than the machine flange thickness, five times is ~~preferable~~ recommended. The edge length respective to the diameter shall be at least equal to the height of the top bearing, L. Figure 6 is an example for IM V1 (see IEC 60034-7).

The ~~mounting~~ steel base shall be clamped firmly and tilt safe to a solid floor and meet the requirements to 6.3.1.2 or 6.3.1.3. The flange connection shall use the correct number ~~and diameter~~ of fasteners or clamps. If the above method of mounting is not reasonable, other arrangements can be per agreement between supplier and customer.

6.4 Active environment determination

The support systems described in 6.2 and 6.3 are considered passive, admitting insignificant external disturbances to the machine. When, for the same measurement position, the vibration magnitude with the machine at standstill exceeds 25 % of the value when the machine is running, then an active environment is said to exist and this standard does not apply (see ~~ISO 10816-1~~ ISO 20816-1).

7 Conditions of measurement

7.1 Key

For the balancing and measurement of vibration on machines provided with a shaft extension keyway, the keyway shall ~~be filled with a half key,~~ be considered according to ~~ISO 8821~~ ISO 21940-32.

7.2 Measurement positions and directions

7.2.1 Measurement positions for vibration

The location of the preferred measurement positions and directions to which the levels of vibration magnitude apply are shown in Figure 2 for machines with end-shield bearings and in Figure 4 for machines with pedestal bearings. Figure 3 applies to those machines where measurement positions according to Figure 2 are not possible without disassembly of parts. When measurements cannot be performed per Figure 2 or Figure 3, there should be an agreement between supplier and customer.

Figure 6 applies to machines mounted in the vertical position.

NOTE 1 Measurement according to Figure 3 might be on the frame as close to the bearing housing as possible.

NOTE 2 Axial vibration measurement may not be possible without disassembly on both ends. If a machine has thrust bearings, this may be per agreement between supplier and customer, see 8.3.

7.2.2 Measurement positions for relative shaft displacement

Non-contacting transducers shall be installed inside the bearing, measuring directly the relative shaft journal displacement, or (when inside mounting is not possible) adjacent to the bearing shell. The preferred radial positions are as indicated in Figure 5.

Documents
Document Sharing Hub
Full document details: IEC 60034-14-2018

7.3 Test conditions

Machines shall be tested at no-load with all relevant quantities at their rated value.

Fixed speed AC machines shall be run with a ~~virtually sinusoidal waveform~~ sinusoidal supply voltage according to IEC 60034-1.

The test shall be performed at each rated fixed speed or over the rated speed range for variable frequency drives. For all tested speeds, the values shall not exceed the corresponding limit in Table 1.

~~Machines intended for variable frequency drives shall be tested at the speeds for which the machine is intended during type tests.~~ In order to discern the mechanically induced vibration from other vibration excitation forces, it is recommended that DC machines are tested with a low current ripple supply or pure DC.

NOTE Tests with variable-frequency power supply normally only confirm mechanically induced vibrations. It is possible that electrically induced vibrations will be different. ~~To have complete factory tests it is necessary to test with the converter to be installed with the motor in situ.~~ If possible, the tests with the actual converter to be installed with the motor on site will provide better information about vibration behaviour.

For routine testing of variable-speed machines, it is permitted to test at a single speed based upon information obtained during type test.

For machines that are bi-directional, the vibration limits apply for both directions of rotation, but need to be measured in only one direction.

7.4 Vibration transducer

The mounting of the transducer used for vibration measurement ~~and~~ on the machine surface shall be as specified by the manufacturer of the transducer and shall not disturb the vibratory condition of the machine under test.

For this, it is necessary that the total coupled mass of the transducer assembly is less than 1/50 of the mass of the machine.

8 Limits of bearing housing vibration

8.1 Limits of vibration magnitude

The limits apply to the measured broadband r.m.s. vibration velocity and displacement ~~and acceleration~~ in the frequency range specified in Clause 5. ~~Decisive for the evaluation of vibration magnitude is the highest value of these three measurement quantities.~~

~~NOTE For routine tests of standard machines with speeds between 600 min^{-1} and 3 600 min^{-1} it is sufficient to measure only vibration velocity.~~

The vibration magnitude for DC and three phase AC machines with shaft heights 56 mm and higher ~~and~~, for one of either of the two mounting conditions according to Clause 6, shall not exceed the limits specified in Table 1. ~~Values~~ Limits are given for two vibration grades. When no grade is specified, machines complying with this standard shall be grade A.

For routine tests of standard machines with rotational speeds less than 600 min^{-1}, vibration is to be expressed in units of displacement. For rotational speeds from 600 min^{-1} up to 15 000 min^{-1}, vibration is to be expressed in units of velocity.

When the routine test is made with a free-suspension mounting condition, the type test should also include testing with rigid mounting. This is valid for the whole speed range of this standard.

AVA Documents
Document Sharing Hub

Table 1 – Limits of maximum vibration magnitude in displacement (r.m.s.) and velocity (r.m.s.) ~~and acceleration (r.m.s.)~~ for shaft height *H*

~~Vibration grade~~	~~Shaft height, mm~~	~~56 ≤ *H* ≤ 132~~			~~132 < *H* ≤ 280~~			~~*H* > 280~~		
	~~Mounting~~	~~Displac. µm~~	~~Vel. mm/s~~	~~Acc. m/s²~~	~~Displac. µm~~	~~Vel. mm/s~~	~~Acc. m/s²~~	~~Displac. µm~~	~~Vel. mm/s~~	~~Acc. m/s²~~
~~A~~	~~Free suspension~~	~~25~~	~~1,6~~	~~2,5~~	~~35~~	~~2,2~~	~~3,5~~	~~45~~	~~2,8~~	~~4,4~~
	~~Rigid mounting~~	~~21~~	~~1,3~~	~~2,0~~	~~29~~	~~1,8~~	~~2,8~~	~~37~~	~~2,3~~	~~3,6~~
~~B~~	~~Free suspension~~	~~11~~	~~0,7~~	~~1,1~~	~~18~~	~~1,1~~	~~1,7~~	~~29~~	~~1,8~~	~~2,8~~
	~~Rigid mounting~~		~~–~~		~~14~~	~~0,9~~	~~1,4~~	~~24~~	~~1,5~~	~~2,4~~

Vibration grade	Shaft height, mm	56 ≤ *H* ≤ 132		*H* > 132	
	Mounting	Displacement µm	Velocity mm/s	Displacement µm	Velocity mm/s
A	Free suspension	45	2,8	45	2,8
	Rigid mounting	–	–	37	2,3 2,8*
B	Free suspension	18	1,1	29	1,8
	Rigid mounting	–	–	24	1,5 1,8*

Grade A applies to machines with no special vibration requirements.

Grade B applies to machines with special vibration requirements.

Rigid mounting is not considered acceptable for machines with shaft heights less than or equal to 132 mm.

~~The interface frequencies for displacement/velocity and velocity/acceleration are 10 Hz and 250 Hz respectively.~~

Vibration at frequencies above 1 000 Hz should be filtered out.

The shaft height of a machine without feet, or a machine with raised feet, or any vertical machine is to be taken as the shaft height of a machine in the same basic frame, but of the horizontal shaft foot-mounting type.

* This level is the limit when the twice line frequency vibration level is dominant as defined in 8.2 and explained in Figure 7.

NOTE 1 The manufacturer and the purchaser ~~should~~ take into account that the instrumentation can have a measurement tolerance of ± 10 %.

~~NOTE The shaft height of a machine without feet, or a machine with raised feet, or any vertical machine is to be taken as the shaft height of a machine in the same basic frame, but of the horizontal shaft foot-mounting type.~~

NOTE 2 A machine which is well-balanced in itself and of a grade conforming with Table 1 may exhibit large vibrations when installed ~~in situ~~ on site arising from various causes, such as unsuitable foundations, reaction of the driven machine, current ripple from the power supply, etc. Vibration may also be caused by driving elements with a natural oscillation frequency very close to the excitation due to the small residual unbalance of the rotating masses of the machine. In such cases, checks ~~should~~ can be carried out on site not only on the machine, but also on each element of the installation. (See ISO 10816-3.)

NOTE 3 As mentioned for onsite operation in ISO 20816-1, special agreements can be made. The values given in ISO 20816-1 are the basis for the ease of discussion and agreement between the supplier and the user. The values ensure in most applications that major errors or unrealistic requirements are avoided. Special agreements are also made for acceleration and deceleration ramps. Short term vibration limits and reduced bearing life time as a function of vibration velocity can be given by the manufacturer.

Documents
Document Sharing Hub

Full document details: IEC 60034-14-2018

8.2 Limits of vibration velocity with twice-line frequency for a.c. machines

Two-pole induction machines may have electromagnetic excited vibration at twice the frequency of the power system. The correct evaluation of these vibration components requires a rigid mounting of the machine, which complies with the requirements given in 6.3.

When type tests demonstrate a dominant twice line frequency component for machines having H > ~~280~~ 132 mm, the vibration magnitude limit in Table 1 (for Grade A) is increased to 2,8 mm/s (r.m.s.) from 2,3 mm/s (r.m.s.) or (for Grade B) is increased to 1,8 mm/s (r.m.s.) from 1,5 mm/s (r.m.s.). Greater values are subject to prior agreement. A twice line frequency component is considered dominant when type tests demonstrate it to be greater than 70 % of 2,3 mm/s (r.m.s.) (for Grade A) or 70 % of 1,5 mm/s (r.m.s.) (for Grade B). Graphical interpretation of the definition above is shown in Figure 7.

NOTE 1 With respect to the twice-line frequency component agreements between the supplier and the customer can be made.

NOTE 2 70 % approximates $\frac{1}{\sqrt{2}}$100 %, where the rms values of rotational and twice-line frequency are equal.

8.3 Axial vibration

The evaluation of axial bearing vibration depends on the bearing function and bearing construction.

In the case of thrust bearings, axial vibration correlates with thrust pulsations, which could cause damage to the metal liner of sleeve bearings or to parts of antifriction bearings. Axial vibration of these bearings shall be evaluated in the same manner as transverse vibration and Table 1 limits apply.

For bearings having no axial limiting construction such as sleeve bearings with no axial thrust bearing, the requirement may be relaxed by prior agreement.

9 Limits of relative shaft vibration

Relative shaft vibration measurements are recommended only for sleeve bearing machines with speeds >1 200 min^{-1}; rated power >1 000 kW; and shall be subject to prior agreement with respect to the necessary provisions regarding the installation of shaft measurement transducers.

When machines with sleeve bearings have special provisions for the installation of shaft vibration measurement transducers, the limits for the relative shaft vibration displacement are specified in Table 2. These limits are in addition to those required in Clause 8.

Documents
Document Sharing Hub
Full document details: IEC 60034-14-2018

Table 2 – Limits for the maximum shaft vibration ($S_{p\text{-}p}$) and the maximum run-out

Vibration grade	Speed range min^{-1}	Maximum relative shaft displacement µm	Maximum combined mechanical and electrical run-out µm
A	> 1 800	65	16
	≤ 1 800	90	23
B	> 1 800	50	12,5
	≤ 1 800	65	16

~~NOTE 1 machines with vibration grade "B" are frequently specified for high speed drives in critical installations.~~

Grade B applies to machines with special vibration requirements.

~~NOTE 2~~ The maximum relative shaft displacement limits include the run-out. For the definition of the run-out see ~~ISO 7919-1~~ ISO 20816-1.

Documents
Document Sharing Hub

Full document details: IEC 60034-14-2018

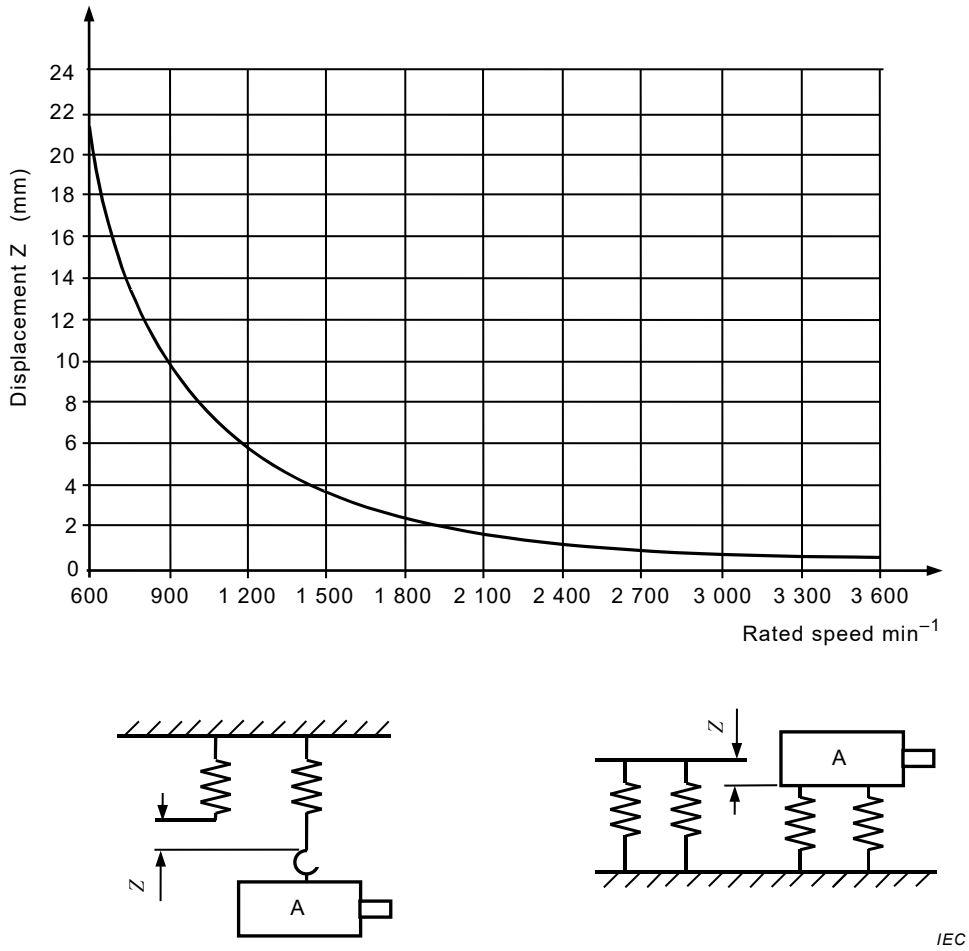

Key

A machine under test

Z displacement

Figure 1 – Minimum elastic displacement as a function of rated speed

~~NOTE~~ To reduce the influence of the mass and the moments of inertia of the suspension system on the vibration level, the effective mass of the elastic support ~~should~~ shall be not greater than 1/10 of that of the machine.

Documents
Document Sharing Hub
Full document details: IEC 60034-14-2018

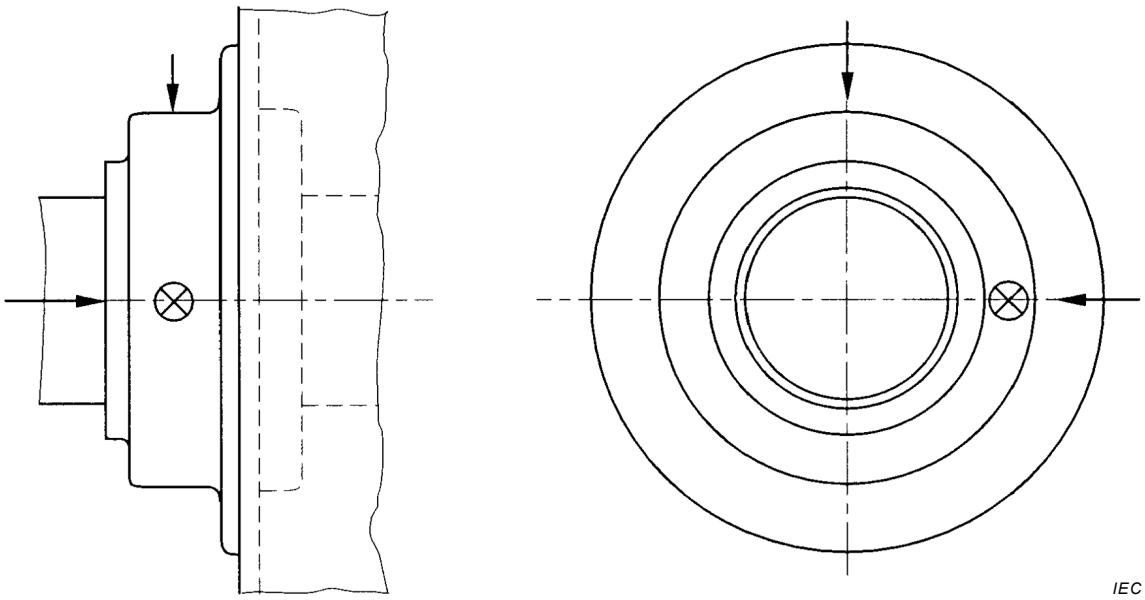

Figure 2 – Preferred positions of measurement applicable to one or both ends of the machine

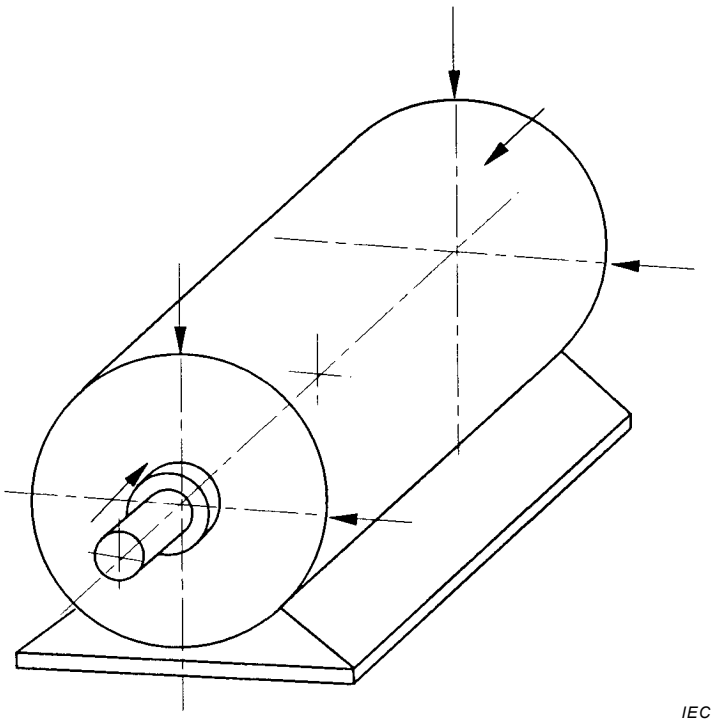

Figure 3 – Measurement positions for those ends of machines where measurements according to Figure 2 are not possible without disassembly of parts

Documents
Document Sharing Hub
Full document details: IEC 60034-14-2018

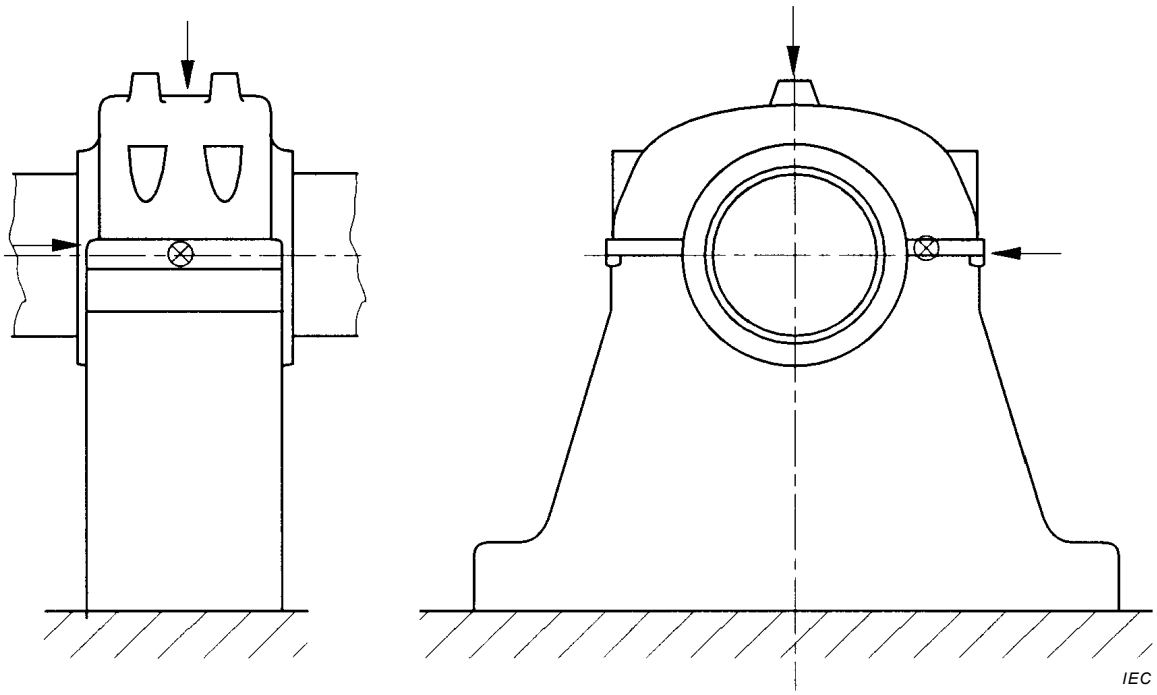

Figure 4 – Measurement positions for pedestal bearing

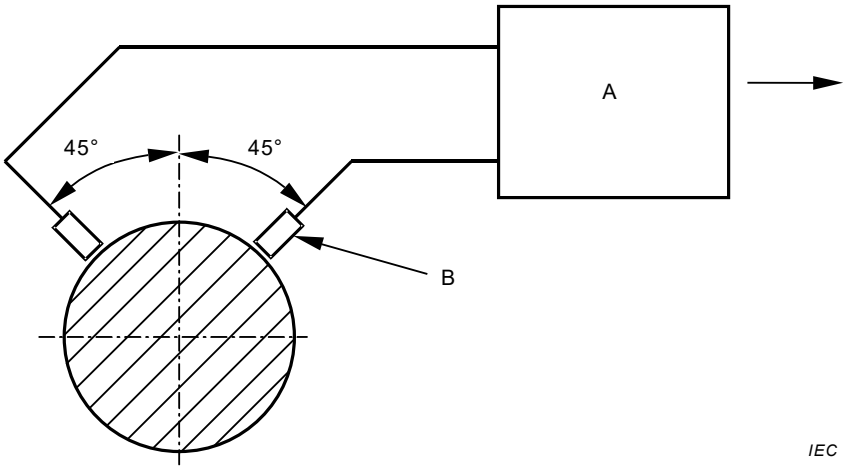

Key

A signal conditioner

B transducer

Figure 5 – Preferred circumferential position of transducers for the measurement of relative shaft displacement

Documents
Document Sharing Hub
Full document details: IEC 60034-14-2018