IEC 60034-19

Edition 2.0 2014-09

INTERNATIONAL STANDARD

NORME INTERNATIONALE

Rotating electrical machines – Part 19: Specific test methods for d.c. machines on conventional and rectifier-fed supplies

Machines électriques tournantes – Partie 19: Méthodes spécifiques d'essai pour machines à courant continu à alimentation conventionnelle ou redressée

IEC 60034-19:2014-09(en-fr)

Documents
Document Sharing Hub
Full document details: IEC 60034-19 2014

THIS PUBLICATION IS COPYRIGHT PROTECTED

Copyright © 2014 IEC, Geneva, Switzerland

All rights reserved. Unless otherwise specified, no part of this publication may be reproduced or utilized in any form or by any means, electronic or mechanical, including photocopying and microfilm, without permission in writing from either IEC or IEC's member National Committee in the country of the requester. If you have any questions about IEC copyright or have an enquiry about obtaining additional rights to this publication, please contact the address below or your local IEC member National Committee for further information.

Droits de reproduction réservés. Sauf indication contraire, aucune partie de cette publication ne peut être reproduite ni utilisée sous quelque forme que ce soit et par aucun procédé, électronique ou mécanique, y compris la photocopie et les microfilms, sans l'accord écrit de l'IEC ou du Comité national de l'IEC du pays du demandeur. Si vous avez des questions sur le copyright de l'IEC ou si vous désirez obtenir des droits supplémentaires sur cette publication, utilisez les coordonnées ci-après ou contactez le Comité national de l'IEC de votre pays de résidence.

IEC Central Office
3, rue de Varembé
CH-1211 Geneva 20
Switzerland

Tel.: +41 22 919 02 11
Fax: +41 22 919 03 00
info@iec.ch
www.iec.ch

About the IEC
The International Electrotechnical Commission (IEC) is the leading global organization that prepares and publishes International Standards for all electrical, electronic and related technologies.

About IEC publications
The technical content of IEC publications is kept under constant review by the IEC. Please make sure that you have the latest edition, a corrigenda or an amendment might have been published.

IEC Catalogue - webstore.iec.ch/catalogue
The stand-alone application for consulting the entire bibliographical information on IEC International Standards, Technical Specifications, Technical Reports and other documents. Available for PC, Mac OS, Android Tablets and iPad.

IEC publications search - www.iec.ch/searchpub
The advanced search enables to find IEC publications by a variety of criteria (reference number, text, technical committee,…). It also gives information on projects, replaced and withdrawn publications.

IEC Just Published - webstore.iec.ch/justpublished
Stay up to date on all new IEC publications. Just Published details all new publications released. Available online and also once a month by email.

Electropedia - www.electropedia.org
The world's leading online dictionary of electronic and electrical terms containing more than 30 000 terms and definitions in English and French, with equivalent terms in 14 additional languages. Also known as the International Electrotechnical Vocabulary (IEV) online.

IEC Glossary - std.iec.ch/glossary
More than 55 000 electrotechnical terminology entries in English and French extracted from the Terms and Definitions clause of IEC publications issued since 2002. Some entries have been collected from earlier publications of IEC TC 37, 77, 86 and CISPR.

IEC Customer Service Centre - webstore.iec.ch/csc
If you wish to give us your feedback on this publication or need further assistance, please contact the Customer Service Centre: csc@iec.ch.

A propos de l'IEC
La Commission Electrotechnique Internationale (IEC) est la première organisation mondiale qui élabore et publie des Normes internationales pour tout ce qui a trait à l'électricité, à l'électronique et aux technologies apparentées.

A propos des publications IEC
Le contenu technique des publications IEC est constamment revu. Veuillez vous assurer que vous possédez l'édition la plus récente, un corrigendum ou amendement peut avoir été publié.

Catalogue IEC - webstore.iec.ch/catalogue
Application autonome pour consulter tous les renseignements bibliographiques sur les Normes internationales, Spécifications techniques, Rapports techniques et autres documents de l'IEC. Disponible pour PC, Mac OS, tablettes Android et iPad.

Recherche de publications IEC - www.iec.ch/searchpub

La recherche avancée permet de trouver des publications IEC en utilisant différents critères (numéro de référence, texte, comité d'études,…). Elle donne aussi des informations sur les projets et les publications remplacées ou retirées.

IEC Just Published - webstore.iec.ch/justpublished

Restez informé sur les nouvelles publications IEC. Just Published détaille les nouvelles publications parues. Disponible en ligne et aussi une fois par mois par email.

Electropedia - www.electropedia.org

Le premier dictionnaire en ligne de termes électroniques et électriques. Il contient plus de 30 000 termes et définitions en anglais et en français, ainsi que les termes équivalents dans 14 langues additionnelles. Egalement appelé Vocabulaire Electrotechnique International (IEV) en ligne.

Glossaire IEC - std.iec.ch/glossary
Plus de 55 000 entrées terminologiques électrotechniques, en anglais et en français, extraites des articles Termes et Définitions des publications IEC parues depuis 2002. Plus certaines entrées antérieures extraites des publications des CE 37, 77, 86 et CISPR de l'IEC.

Service Clients - webstore.iec.ch/csc

Si vous désirez nous donner des commentaires sur cette publication ou si vous avez des questions contactez-nous: csc@iec.ch.

Documents
Document Sharing Hub

Full document details: IEC 60034-19 2014

IEC 60034-19

Edition 2.0 2014-09

INTERNATIONAL STANDARD

NORME INTERNATIONALE

Rotating electrical machines – Part 19: Specific test methods for d.c. machines on conventional and rectifier-fed supplies

Machines électriques tournantes – Partie 19: Méthodes spécifiques d'essai pour machines à courant continu à alimentation conventionnelle ou redressée

INTERNATIONAL ELECTROTECHNICAL COMMISSION

COMMISSION ELECTROTECHNIQUE INTERNATIONALE

PRICE CODE
CODE PRIX S

ICS 29.160

ISBN 978-2-8322-1861-7

Warning! Make sure that you obtained this publication from an authorized distributor.
Attention! Veuillez vous assurer que vous avez obtenu cette publication via un distributeur agréé.

® Registered trademark of the International Electrotechnical Commission
Marque déposée de la Commission Electrotechnique Internationale

AVA Documents
Document Sharing Hub

Full document details: IEC 60034-19 2014

CONTENTS

FOREWORD 4
1 Scope 6
2 Normative references 6
3 Terms, definitions, symbols and subscripts 6
3.1 Terms and definitions 6
3.2 Symbols 7
3.3 Subscripts 7
4 Determination of current and voltage specific quantities (rectifier-fed) 7
4.1 General 7
4.2 Current ripple 7
4.3 Voltage ripple 8
4.4 Measurement of average values 8
4.5 Measurement of root-mean-square values 8
4.6 Calculation of current and voltage ripple factors and form factor 8
5 Determination of the armature circuit inductance 8
5.1 Procedure performed before starting the tests 8
5.2 Measurement of armature circuit inductance of shunt and compound-wound machines 8
5.3 Measurement of armature circuit inductance of series-excited machine 9
5.4 Calculation of armature circuit inductance L_a on the basis of direct measurement 9
5.5 Saturated armature circuit inductance at a loaded condition 9
6 Determination of shunt-field inductance 10
6.1 General 10
6.2 Unsaturated shunt-field inductance 10
6.3 Saturated shunt-field inductance 10
6.4 Shunt-field inductance with consideration of eddy current effect 10
6.5 Shunt-field inductance without consideration of eddy current effect 11
7 Determination of black-band zone 12
7.1 General 12
7.2 Set-up 12
7.3 Test procedure 13
7.3.1 Operating conditions 13
7.3.2 Determination of the minimum current of the commutating winding 14
7.3.3 Determination of the maximum current of the commutating winding 14
7.4 Calculation of black-band width (Δ_n) and black-band shift (δ_n) 14
8 Determination of the maximum permissible rate of change of armature current 15
8.1 General 15
8.2 Set-up 15
8.3 Test procedure 16
8.3.1 Operating conditions 16
8.3.2 Measuring the rise of armature current 16
8.4 Calculation of initial rate of change of armature current 16
9 Additional losses and efficiency of rectifier-fed d.c. motors 17
9.1 General 17
9.2 Measurement procedure 17

AVA Documents
Document Sharing Hub
Full document details: IEC 60034-19 2014

9.3 Calculation of efficiency ... 18
10 Determination of speed regulation ... 18
10.1 General ... 18
10.2 Operating conditions ... 18
10.3 Test procedure ... 18
10.4 Determination of speed regulation ... 18
11 Determination of the shunt regulation curve ... 18
11.1 General ... 18
11.2 Operating conditions ... 19
11.3 Test procedure ... 19
11.4 Determination of the shunt regulation curve ... 19
12 Determination of the magnetisation curve ... 19
12.1 General ... 19
12.2 Operating conditions ... 19
12.3 Test procedure ... 19
12.3.1 General ... 19
12.3.2 Test at no-load ... 19
12.3.3 Test at rated load ... 20
12.4 Determination of the magnetisation curve ... 20

Figure 1 – Determination of saturated armature circuit inductance ... 9
Figure 2 – Test circuit for saturated shunt field inductance measurement ... 10
Figure 3 – Determination of the field inductance ... 11
Figure 4 – Test circuit for black-band testing ... 12
Figure 5 – Additional generator used to boost or subtract the armature current ... 13
Figure 6 – Black-band zone for a specified constant speed of rotation ... 14
Figure 7 – Test circuit for rate of change of armature current measurement ... 15
Figure 8 – Transient build-up of armature current ... 16
Figure 9 – Test circuit for measurement of ripple losses ... 17

Documents
Document Sharing Hub
Full document details: IEC 60034-19 2014

INTERNATIONAL ELECTROTECHNICAL COMMISSION

ROTATING ELECTRICAL MACHINES –

Part 19: Specific test methods for d.c. machines on conventional and rectifier-fed supplies

FOREWORD

1) The International Electrotechnical Commission (IEC) is a worldwide organization for standardization comprising all national electrotechnical committees (IEC National Committees). The object of IEC is to promote international co-operation on all questions concerning standardization in the electrical and electronic fields. To this end and in addition to other activities, IEC publishes International Standards, Technical Specifications, Technical Reports, Publicly Available Specifications (PAS) and Guides (hereafter referred to as "IEC Publication(s)"). Their preparation is entrusted to technical committees; any IEC National Committee interested in the subject dealt with may participate in this preparatory work. International, governmental and non-governmental organizations liaising with the IEC also participate in this preparation. IEC collaborates closely with the International Organization for Standardization (ISO) in accordance with conditions determined by agreement between the two organizations.
2) The formal decisions or agreements of IEC on technical matters express, as nearly as possible, an international consensus of opinion on the relevant subjects since each technical committee has representation from all interested IEC National Committees.
3) IEC Publications have the form of recommendations for international use and are accepted by IEC National Committees in that sense. While all reasonable efforts are made to ensure that the technical content of IEC Publications is accurate, IEC cannot be held responsible for the way in which they are used or for any misinterpretation by any end user.
4) In order to promote international uniformity, IEC National Committees undertake to apply IEC Publications transparently to the maximum extent possible in their national and regional publications. Any divergence between any IEC Publication and the corresponding national or regional publication shall be clearly indicated in the latter.
5) IEC itself does not provide any attestation of conformity. Independent certification bodies provide conformity assessment services and, in some areas, access to IEC marks of conformity. IEC is not responsible for any services carried out by independent certification bodies.
6) All users should ensure that they have the latest edition of this publication.
7) No liability shall attach to IEC or its directors, employees, servants or agents including individual experts and members of its technical committees and IEC National Committees for any personal injury, property damage or other damage of any nature whatsoever, whether direct or indirect, or for costs (including legal fees) and expenses arising out of the publication, use of, or reliance upon, this IEC Publication or any other IEC Publications.
8) Attention is drawn to the Normative references cited in this publication. Use of the referenced publications is indispensable for the correct application of this publication.
9) Attention is drawn to the possibility that some of the elements of this IEC Publication may be the subject of patent rights. IEC shall not be held responsible for identifying any or all such patent rights.

International Standard IEC 60034-19 has been prepared by IEC technical committee 2: Rotating machinery.

This second edition cancels and replaces the first edition published in 1995. It constitutes a technical revision. The main technical changes with regard to the previous edition are as follows:

a) The description of the procedure for black band testing has been detailed and clarified.
b) Procedures for measurement of the magnetization curves under no-load and load conditions have been added.

Documents
Document Sharing Hub

Full document details: IEC 60034-19 2014

The text of this standard is based on the following documents:

FDIS	Report on voting
2/1756/FDIS	2/1764/RVD

Full information on the voting for the approval of this standard can be found in the report on voting indicated in the above table.

This publication has been drafted in accordance with the ISO/IEC Directives, Part 2.

NOTE A table of cross-references of all IEC TC 2 publications can be found on the IEC TC 2 dashboard on the IEC website.

The committee has decided that the contents of this publication will remain unchanged until the stability date indicated on the IEC web site under "http://webstore.iec.ch" in the data related to the specific publication. At this date, the publication will be

- reconfirmed,
- withdrawn,
- replaced by a revised edition, or
- amended.

Documents
Document Sharing Hub

Full document details: IEC 60034-19 2014

ROTATING ELECTRICAL MACHINES –

Part 19: Specific test methods for d.c. machines on conventional and rectifier-fed supplies

1 Scope

This part of IEC 60034 applies to d.c. machines rated 1 kW and above operating on rectifier-fed power supplies, d.c. buses or other d.c. sources.

Standardized methods are provided for determining characteristic quantities for conventional and rectifier-fed d.c. machines.

Excluded are d.c machines for specific applications.

These methods supplement the requirements in IEC 60034-1 and IEC 60034-2-1.

NOTE It is not intended that this standard should be interpreted as requiring the carrying out of any or all of the tests described therein on any given machine.

2 Normative references

The following documents, in whole or in part, are normatively referenced in this document and are indispensable for its application. For dated references, only the edition cited applies. For undated references, the latest edition of the referenced document (including any amendments) applies.

IEC 60034-1, *Rotating electrical machines – Part 1: Rating and performance*

IEC 60034-2-1, *Rotating electrical machines – Part 2-1: Standard methods for determining losses and efficiency from tests (excluding machines for traction vehicles)*

3 Terms, definitions, symbols and subscripts

3.1 Terms and definitions

For the purposes of this document, the following terms and definitions apply.

3.1.1
current ripple
peak-to-peak amplitude of the armature current of rectifier-fed d.c. machines

3.1.2
voltage ripple
peak-to-peak amplitude of the terminal voltage of rectifier-fed d.c. machines

3.1.3
time constant
time to achieve 63,2 % of steady-state value after applying a d.c. step input, assuming a first order system

AVA Documents
Document Sharing Hub

Full document details: IEC 60034-19 2014

3.1.4
black band zone
interval between the current limits of the commutating poles, between which sparkless commutation is attainable for load currents up to and including rated current

3.1.5
sparkless
absence of any type of sparking

3.2 Symbols

C is the capacitance, [F]

f is the frequency, [Hz]

I, i is the current, [A]

L is the inductance, [H]

n is the speed, [min^{-1}]

P is the power, [W]

R is the winding resistance, [Ω]

t is the time, [s]

U is the voltage, [V]

Δ_n is the black band width, [%]

δ_n is the black band shift, [%]

τ is the time constant, [s]

θ is the phase angle

3.3 Subscripts

1 input

2 output

a armature

b boost

e exciter

f field

LL additional loss

n test point

N rated condition

s subtract

0 no-load

∞ ultimate

4 Determination of current and voltage specific quantities (rectifier-fed)

4.1 General

This test serves to determine the variation of the terminal voltage and armature current for rectifier-fed d.c. machines at rated conditions.

4.2 Current ripple

The armature current ripple is best measured with an oscilloscope incorporating capability for reading both d.c. and a.c. values. An alternative method is to use a peak-to-peak reading

AVA Documents
Document Sharing Hub

Full document details: IEC 60034-19 2014

voltmeter, reading the voltage drop across a non-inductive resistor in series with the armature circuit.

4.3 Voltage ripple

The voltage ripple may be measured using an oscilloscope, a suitable oscillograph or an electronic peak-to-peak indicating voltmeter in series with an appropriate blocking capacitor of sufficient size not to affect the a.c. readings.

It should be noted that in measuring the peak-to-peak value, deviations from the main waveform due to high frequency spikes should be ignored.

4.4 Measurement of average values

In the case of rectifier supply, the average d.c. values of armature voltage and current can be measured using permanent-magnet moving-coil type instruments, or other instruments including digital instrumentation known to provide true average readings.

4.5 Measurement of root-mean-square values

Root-mean-square values can be measured using electrodynamometer type, moving-iron type, or other instruments including digital instrumentation known to provide true r.m.s. readings. AC instrumentation of the type using rectifiers to sense only a portion of the voltage or current signal and instruments whose calibration is based on the assumption of a sinusoidal waveform shall not be used. Oscilloscope readings of the voltage and current signals are recommended.

4.6 Calculation of current and voltage ripple factors and form factor

The current ripple factors and the form factor shall be calculated using the formulas of IEC 60034-1, with maximum, minimum, average and r.m.s. waveform values measured according to 4.2 to 4.5 of this part. The voltage ripple factor shall be calculated similar to the current ripple factor.

5 Determination of the armature circuit inductance

5.1 Procedure performed before starting the tests

It is recommended to measure the armature circuit inductance by applying a single phase 50 Hz or 60 Hz alternating current to the armature circuit terminals of the machine. The rotor shall be locked to prevent rotation. Normal carbon brushes can be used if the alternating current is limited to approximately 20 % of the current rating of the machine to avoid overheating of the brushes or of the commutator during the short tests. The brushes shall be completely in contact with the commutator surface and inspected before the test is started and after the test is finished.

In declaring values of inductance it shall be stated whether the value refers to the saturated or unsaturated condition.

Measure and record the r.m.s. value of voltage U, current I, frequency f and the phase angle θ between voltage and current. The phase angle may be determined using suitable means such as an oscilloscope or a phasemeter, or by an indirect method, e.g. using a wattmeter.

5.2 Measurement of armature circuit inductance of shunt and compound-wound machines

The armature circuit inductance of shunt and compound-wound machines is to be measured for both unsaturated and saturated conditions.

Documents
Document Sharing Hub

Full document details: IEC 60034-19 2014

For the unsaturated test the shunt-field winding shall be short-circuited to avoid high voltages being induced in the winding. For the saturated test the shunt field is excited as for rated operation from a d.c. power supply, having a current ripple not exceeding 6 %.

5.3 Measurement of armature circuit inductance of series-excited machine

The test on a series-excited machine is to be done for the saturated condition only. This test shall be carried out with the series-field winding separately excited at rated current using a d.c. power supply having a current ripple factor not exceeding 6 %.

The saturated inductance, so determined, does not include the inductance contributed by the series-field which shall be determined as described in 6.3 for the saturated shunt-field test.

5.4 Calculation of armature circuit inductance L_a on the basis of direct measurement

The armature inductance L_a is given by:

$$L_a = \frac{U \cdot \sin\theta}{2\pi \cdot f \cdot I}$$

where U, I, f and θ are determined according to 5.1.

5.5 Saturated armature circuit inductance at a loaded condition

To determine the saturated armature circuit inductance under load, the machine to be tested shall be operated as a generator at about the specified load current, and an a.c. current of about 20 % of the rated current shall be superposed on the d.c. load current by using an a.c. generator, a capacitor C and an inductor L, as shown in Figure 1.

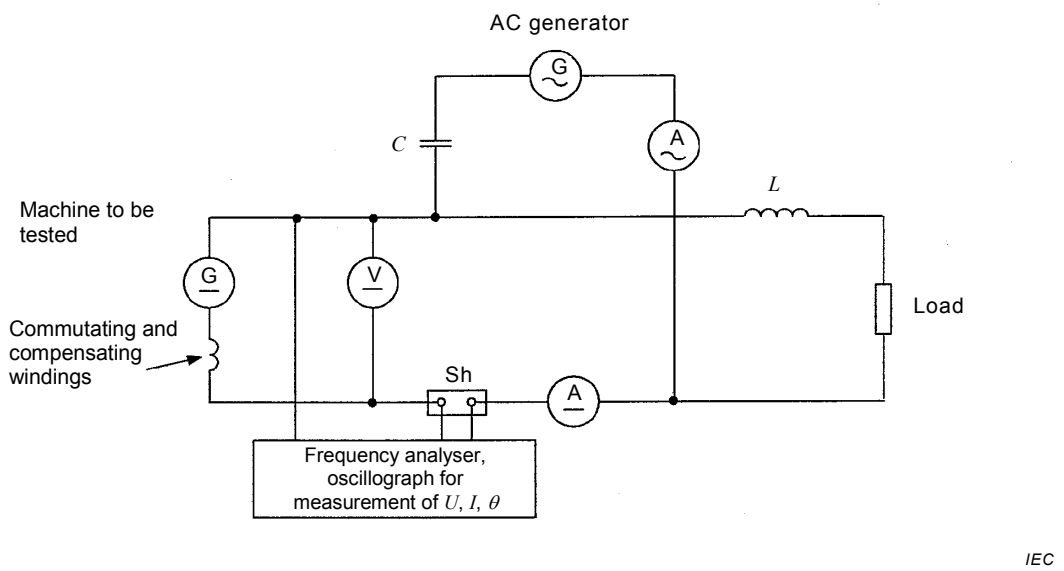

Figure 1 – Determination of saturated armature circuit inductance

The armature circuit inductance is calculated by the same formula as that in 5.4, using the r.m.s. values of a.c. voltage U and a.c. current I.

Documents
Document Sharing Hub
Full document details: IEC 60034-19 2014

6 Determination of shunt-field inductance

6.1 General

The shunt-field inductance is to be determined from the rate of rise of shunt-field current upon abrupt application of voltage to the shunt-field terminals. The effective shunt-field inductance is calculated from the rate of rise of direct-axis flux as indicated by the armature voltage appearing at the brushes. During the test the machine is driven at rated full-field speed with the armature open-circuited. The test is to be done for both unsaturated and saturated conditions.

In declaring values of inductance it shall be stated whether the value refers to the saturated or unsaturated condition.

6.2 Unsaturated shunt-field inductance

To find the unsaturated inductance, the shunt-field shall be excited from a voltage source having a regulation at rated full-field excitation of the test machine of less than 2 %. The shunt-field voltage is slowly cycled twice between the value yielding rated armature voltage and zero, and then the armature voltage is reduced to approximately 50 % of rated value.

After recording, the shunt-field voltage is reduced to zero and the field circuit is opened. Then the shunt-field voltage is reset to the recorded value. The shunt-field circuit is closed, and then the shunt-field voltage and current, and the armature voltage are observed and recorded against time.

6.3 Saturated shunt-field inductance

To find the saturated inductance, the shunt-field excitation shall be set (see Figure 2) so that an abrupt change in field voltage produces a change in open circuit armature voltage from 90 % to 110 % rated value. With the switch closed, the shunt-field supply voltage U_f is adjusted to produce a field current yielding 110 % of rated armature voltage. With the switch opened, R_{ext} (see Figure 2) is cycled twice between the values yielding 90 % and 110 % of rated armature voltage, finishing at the 90 % value. The switch is then closed, and the shunt-field voltage and current and the armature voltage are recorded against time.

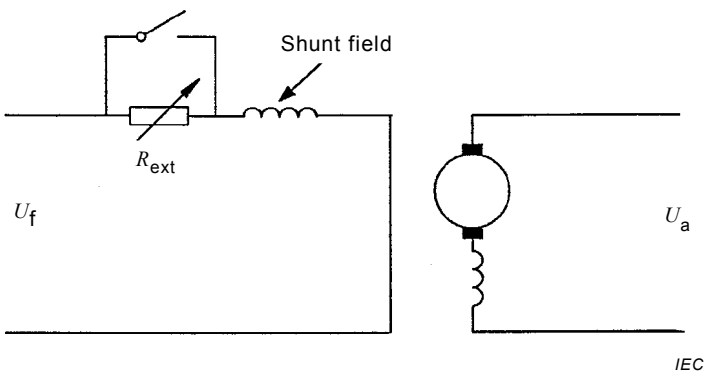

Figure 2 – Test circuit for saturated shunt-field inductance measurement

6.4 Shunt-field inductance with consideration of eddy current effect

The field inductance can be calculated taken the effect of eddy currents in the iron core of the machine on the transient field current into account.

The values of $(I_{f\infty} - I_f)/I_{f\infty}$ against time t are evaluated using a logarithmic scale for the former, where I_f is the magnitude of change in field current after the abrupt application of field

AVA Documents
Document Sharing Hub
Full document details: IEC 60034-19 2014

voltage and $I_{f\infty}$ is the ultimate value of I_f. In Figure 3 two points p and q are arbitrarily chosen within the straight part of the plot. The value "a" is read on the logarithmic scale at the intersection with the ordinate of the extension of the straight line passing through the two points p and q.

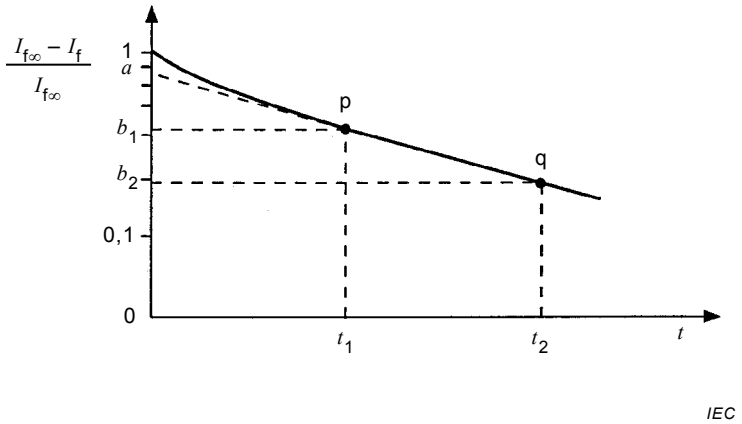

Figure 3 – Determination of the field inductance

The value "c" shall be calculated by:

$$c = \frac{\log_e b_1 - \log_e b_2}{t_2 - t_1}$$

where

b_1 and b_2 are the values of $(I_{f\infty} - I_f)/I_{f\infty}$ at the time t_1 and t_2 respectively. The value of the field inductance is as follows:

$$L_f = R_f \cdot \frac{a}{c}$$

where

R_f is the field resistance.

NOTE This formula is based on the following approximate formula:

$$I_f = I_{f\infty} \cdot \left(1 - \frac{\tau_f}{\tau_f + \tau_e} \cdot e^{-\frac{t}{\tau_f + \tau_e}}\right)$$

where

τ_f is the time constant of the field circuit and τ_e is the time constant of the equivalent eddy current circuit.

6.5 Shunt-field inductance without consideration of eddy current effect

When the effect of eddy current in the iron core may be neglected the experimental values of shunt-field inductance shall be evaluated from the following expressions:

$$L_f = R_f \times \tau_{fI}$$

$$L_{feff} = R_f \times \tau_{aU}$$

where

L_f is the shunt-field inductance;

L_{feff} is the shunt-field effective inductance;

Documents
Document Sharing Hub
Full document details: IEC 60034-19 2014

R_f is the d.c. shunt-field resistance measured directly after the test has been completed;

τ_{fI} is the time to achieve 63,2 % of field-current change;

τ_{aU} is the time to achieve 63,2 % of armature-voltage change.

7 Determination of black band zone

7.1 General

The purpose of black band testing is to determine the limits of over- or under-commutation, between which sparkless commutation is attainable for load currents up to and including rated current. To vary the magnetic field in the quadrature axis, a low voltage additional generator is connected in parallel across the commutating-pole winding (and compensating winding, when fitted) according to Figure 4.

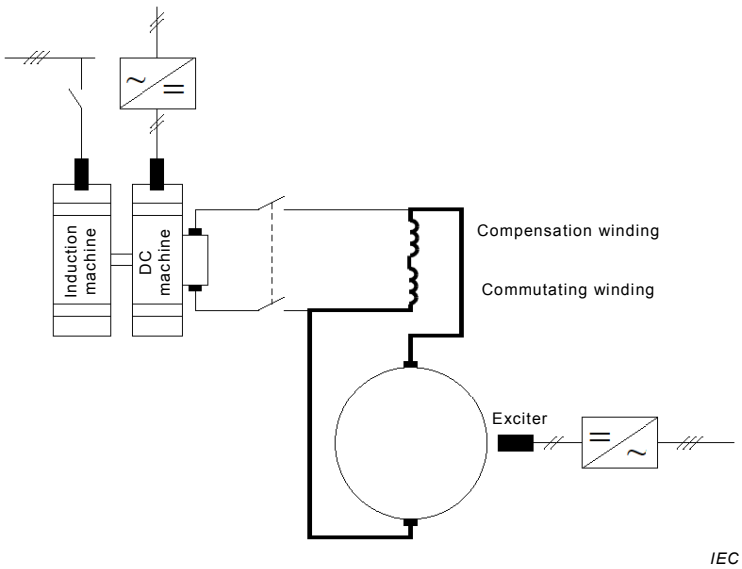

Figure 4 – Test circuit for black band testing

Black band testing is applicable to all machines fitted with commutating poles and shall be done at rated base speed and also at rated maximum speed (if applicable). When possible the test shall be done with the machine on load. For machines rated at 500 kW and above, black band testing may be done under generator short-circuit condition. If the test is done with the machine running as a motor, the latter shall be fed from a source of smooth current.

When the test is performed under short-circuit condition, a field current close to zero shall be adjusted and permanently checked for the whole range of armature current up to rated current. A small increase of the field may cause that the control over the armature current is lost.

7.2 Set-up

For most reliable results, it is recommended that the tests be done on the machine when at its normal operating temperature. It is essential that all brushes are completely in contact with the commutator before starting tests.

It is preferable to perform black band testing using a pure d.c. armature supply. When this is not possible, a rectifier-fed supply is to be used. In such cases it may be necessary to insert a suitable inductance into the circuit of the armature supply.

Documents
Document Sharing Hub
Full document details: IEC 60034-19 2014