IEC 60034-28

Edition 2.0 2012-12

INTERNATIONAL STANDARD

NORME INTERNATIONALE

colour inside

Rotating electrical machines –
Part 28: Test methods for determining quantities of equivalent circuit diagrams for three-phase low-voltage cage induction motors

Machines électriques tournantes –
Partie 28: Méthodes d'essai pour la détermination des grandeurs des schémas d'équivalence des circuits pour moteurs à induction à cage basse tension triphasés

IEC 60034-28:2012

Documents
Document Sharing Hub

Full document details: IEC 60034-28 2012

THIS PUBLICATION IS COPYRIGHT PROTECTED

Copyright © 2012 IEC, Geneva, Switzerland

All rights reserved. Unless otherwise specified, no part of this publication may be reproduced or utilized in any form or by any means, electronic or mechanical, including photocopying and microfilm, without permission in writing from either IEC or IEC's member National Committee in the country of the requester.
If you have any questions about IEC copyright or have an enquiry about obtaining additional rights to this publication, please contact the address below or your local IEC member National Committee for further information.

Droits de reproduction réservés. Sauf indication contraire, aucune partie de cette publication ne peut être reproduite ni utilisée sous quelque forme que ce soit et par aucun procédé, électronique ou mécanique, y compris la photocopie et les microfilms, sans l'accord écrit de la CEI ou du Comité national de la CEI du pays du demandeur.
Si vous avez des questions sur le copyright de la CEI ou si vous désirez obtenir des droits supplémentaires sur cette publication, utilisez les coordonnées ci-après ou contactez le Comité national de la CEI de votre pays de résidence.

IEC Central Office
3, rue de Varembé
CH-1211 Geneva 20
Switzerland

Tel.: +41 22 919 02 11
Fax: +41 22 919 03 00
info@iec.ch
www.iec.ch

About the IEC

The International Electrotechnical Commission (IEC) is the leading global organization that prepares and publishes International Standards for all electrical, electronic and related technologies.

About IEC publications

The technical content of IEC publications is kept under constant review by the IEC. Please make sure that you have the latest edition, a corrigenda or an amendment might have been published.

Useful links:

IEC publications search - www.iec.ch/searchpub

The advanced search enables you to find IEC publications by a variety of criteria (reference number, text, technical committee,…).
It also gives information on projects, replaced and withdrawn publications.

IEC Just Published - webstore.iec.ch/justpublished

Stay up to date on all new IEC publications. Just Published details all new publications released. Available on-line and also once a month by email.

Electropedia - www.electropedia.org

The world's leading online dictionary of electronic and electrical terms containing more than 30 000 terms and definitions in English and French, with equivalent terms in additional languages. Also known as the International Electrotechnical Vocabulary (IEV) on-line.

Customer Service Centre - webstore.iec.ch/csc

If you wish to give us your feedback on this publication or need further assistance, please contact the Customer Service Centre: csc@iec.ch.

A propos de la CEI

La Commission Electrotechnique Internationale (CEI) est la première organisation mondiale qui élabore et publie des Normes internationales pour tout ce qui a trait à l'électricité, à l'électronique et aux technologies apparentées.

A propos des publications CEI

Le contenu technique des publications de la CEI est constamment revu. Veuillez vous assurer que vous possédez l'édition la plus récente, un corrigendum ou amendement peut avoir été publié.

Liens utiles:

Recherche de publications CEI - www.iec.ch/searchpub

La recherche avancée vous permet de trouver des publications CEI en utilisant différents critères (numéro de référence, texte, comité d'études,…).
Elle donne aussi des informations sur les projets et les publications remplacées ou retirées.

Just Published CEI - webstore.iec.ch/justpublished

Restez informé sur les nouvelles publications de la CEI. Just Published détaille les nouvelles publications parues. Disponible en ligne et aussi une fois par mois par email.

Electropedia - www.electropedia.org

Le premier dictionnaire en ligne au monde de termes électroniques et électriques. Il contient plus de 30 000 termes et définitions en anglais et en français, ainsi que les termes équivalents dans les langues additionnelles. Egalement appelé Vocabulaire Electrotechnique International (VEI) en ligne.

Service Clients - webstore.iec.ch/csc

Si vous désirez nous donner des commentaires sur cette publication ou si vous avez des questions contactez-nous: csc@iec.ch.

Documents
Document Sharing Hub

Full document details: IEC 60034-28 2012

IEC 60034-28

Edition 2.0 2012-12

INTERNATIONAL STANDARD

NORME INTERNATIONALE

colour inside

Rotating electrical machines –
Part 28: Test methods for determining quantities of equivalent circuit diagrams for three-phase low-voltage cage induction motors

Machines électriques tournantes –
Partie 28: Méthodes d'essai pour la détermination des grandeurs des schémas d'équivalence des circuits pour moteurs à induction à cage basse tension triphasés

INTERNATIONAL
ELECTROTECHNICAL
COMMISSION

COMMISSION
ELECTROTECHNIQUE
INTERNATIONALE

PRICE CODE
CODE PRIX

U

ICS 29.160

ISBN 978-2-83220-553-2

Warning! Make sure that you obtained this publication from an authorized distributor.
Attention! Veuillez vous assurer que vous avez obtenu cette publication via un distributeur agréé.

AVA Documents
Document Sharing Hub

® Registered trademark of the International Electrotechnical Commission
Marque déposée de la Commission Electrotechnique Internationale

Full document details: IEC 60034-28 2012

CONTENTS

FOREWORD 4
INTRODUCTION 6
1 Scope 7
2 Normative references 7
3 Terms, definitions, symbols and conventions 7
3.1 Terms and definitions 7
3.2 Symbols 8
3.3 Subscripts 9
3.4 Winding connection 9
4 Test requirements 10
4.1 General 10
4.2 Frequency and voltage 10
4.3 Instrumentation 10
4.3.1 Measuring instruments for electrical quantities, speed and frequency 10
4.3.2 Instrument transformers 10
4.3.3 Temperature measurement 10
5 Approximations and uncertainties 10
6 Test procedures 11
6.1 General 11
6.2 Stator d.c. line-to-line resistance measurement 11
6.3 Load-test at rated load 11
6.4 Load curve test 12
6.5 No-load test 12
6.6 Reverse rotation and locked rotor tests 13
6.6.1 General 13
6.6.2 Reverse rotation test 13
6.6.3 Locked rotor test 13
7 Determination of motor quantities 13
7.1 General 13
7.2 Resistance of stator winding R_s 15
7.3 Total stator inductance $L_{ts} = L_m + L_{\sigma s}$ 15
7.3.1 General 15
7.3.2 Determination procedure 15
7.4 Equivalent resistance of iron losses $R_{fe\Gamma}$ 16
7.4.1 Constant losses 16
7.4.2 Friction and windage losses 17
7.4.3 Iron losses 17
7.5 Total leakage inductance $L_{t\sigma}$ 18
7.5.1 General 18
7.5.2 Distribution of leakage inductances between stator and rotor 18
7.5.3 Determination of total leakage inductance from a reverse rotation or locked rotor test (6.6) 18
7.5.4 Determination of total leakage inductance from a load curve test (6.4) 20
7.6 Magnetizing inductance L_m and voltage U_m 21
7.6.1 From a reverse rotation or locked rotor test (6.6) 21
7.6.2 From a load curve test (6.4) 21

AVA Documents
Document Sharing Hub
Full document details: IEC 60034-28 2012

7.7 Stator and rotor leakage inductances $L_{\sigma s}$ and $L_{\sigma r}$'.....22
7.7.1 From a reverse rotation or locked rotor test (6.6).....22
7.7.2 From a load curve test (6.4).....22
7.8 Inductances for calculations at constant flux (rated load).....22
7.9 Resistance of rotor cage R_r' referred to the stator winding and frequency.....23
7.10 Equivalent resistance of iron losses R_{fe} 25
Annex A (informative) Sample calculation 26

Figure 1 – Type-T equivalent circuit diagram 14
Figure 2 – Type-T equivalent circuit diagram (iron losses disregarded).....14
Figure 3 – Type-L equivalent circuit diagram (iron losses disregarded) 14
Figure 4 – Type-Γ equivalent circuit diagram.....15
Figure 5 – Typical characteristics of inductance L over current I 16

Documents
Document Sharing Hub
Full document details: IEC 60034-28 2012

INTERNATIONAL ELECTROTECHNICAL COMMISSION

ROTATING ELECTRICAL MACHINES –

Part 28: Test methods for determining quantities of equivalent circuit diagrams for three-phase low-voltage cage induction motors

FOREWORD

1) The International Electrotechnical Commission (IEC) is a worldwide organization for standardization comprising all national electrotechnical committees (IEC National Committees). The object of IEC is to promote international co-operation on all questions concerning standardization in the electrical and electronic fields. To this end and in addition to other activities, IEC publishes International Standards, Technical Specifications, Technical Reports, Publicly Available Specifications (PAS) and Guides (hereafter referred to as "IEC Publication(s)"). Their preparation is entrusted to technical committees; any IEC National Committee interested in the subject dealt with may participate in this preparatory work. International, governmental and non-governmental organizations liaising with the IEC also participate in this preparation. IEC collaborates closely with the International Organization for Standardization (ISO) in accordance with conditions determined by agreement between the two organizations.
2) The formal decisions or agreements of IEC on technical matters express, as nearly as possible, an international consensus of opinion on the relevant subjects since each technical committee has representation from all interested IEC National Committees.
3) IEC Publications have the form of recommendations for international use and are accepted by IEC National Committees in that sense. While all reasonable efforts are made to ensure that the technical content of IEC Publications is accurate, IEC cannot be held responsible for the way in which they are used or for any misinterpretation by any end user.
4) In order to promote international uniformity, IEC National Committees undertake to apply IEC Publications transparently to the maximum extent possible in their national and regional publications. Any divergence between any IEC Publication and the corresponding national or regional publication shall be clearly indicated in the latter.
5) IEC itself does not provide any attestation of conformity. Independent certification bodies provide conformity assessment services and, in some areas, access to IEC marks of conformity. IEC is not responsible for any services carried out by independent certification bodies.
6) All users should ensure that they have the latest edition of this publication.
7) No liability shall attach to IEC or its directors, employees, servants or agents including individual experts and members of its technical committees and IEC National Committees for any personal injury, property damage or other damage of any nature whatsoever, whether direct or indirect, or for costs (including legal fees) and expenses arising out of the publication, use of, or reliance upon, this IEC Publication or any other IEC Publications.
8) Attention is drawn to the Normative references cited in this publication. Use of the referenced publications is indispensable for the correct application of this publication.
9) Attention is drawn to the possibility that some of the elements of this IEC Publication may be the subject of patent rights. IEC shall not be held responsible for identifying any or all such patent rights.

International Standard IEC 60034-28 has been prepared by IEC technical committee 2: Rotating machinery.

This second edition cancels and replaces the first edition published in 2007. This edition constitutes a technical revision.

This edition includes the following significant technical changes with respect to the previous edition.

a) The formulae are now all given for equivalent star-connection equivalent circuit diagrams. They are applied even in the case of delta connected windings. All formulae for delta-connected equivalent circuit diagrams have been moved to notes.
b) Procedures for the determination of equivalent circuit parameters from a load curve test as an alternative to the reverse rotation and locked rotor tests have been added.

Documents
Document Sharing Hub
Full document details: IEC 60034-28 2012

The text of this standard is based on the following documents:

FDIS	Report on voting
2/1685/FDIS	2/1688/RVD

Full information on the voting for the approval of this standard can be found in the report on voting indicated in the above table.

This publication has been drafted in accordance with the ISO/IEC Directives, Part 2.

NOTE A table of cross-references of all IEC TC 2 publications can be found in the IEC TC 2 dashboard on the IEC website.

The committee has decided that the contents of this publication will remain unchanged until the stability date indicated on the IEC web site under "http://webstore.iec.ch" in the data related to the specific publication. At this date, the publication will be

- reconfirmed,
- withdrawn,
- replaced by a revised edition, or
- amended.

IMPORTANT – The 'colour inside' logo on the cover page of this publication indicates that it contains colours which are considered to be useful for the correct understanding of its contents. Users should therefore print this document using a colour printer.

Documents
Document Sharing Hub

Full document details: IEC 60034-28 2012

INTRODUCTION

Equivalent circuits are widely used in the control of adjustable speed drives with induction motors supplied by frequency inverters. The motor parameters are required for the realisation of flux oriented control or other model-based control algorithms. Their knowledge is required by suppliers and system engineers, especially when motors and frequency inverters from different suppliers are combined.

This standard provides a standardized test procedure to determine the electric motor parameters. At the same time the draft offers an improved understanding of the equivalent circuit method. The procedures can be carried out in laboratories equipped for standard electric machinery tests.

NOTE This standard's main purpose is for assistance in modelling frequency controlled motors. Due to the simplifications the results cannot be used to determine motor performance or efficiency accurately.

A related technical specification is IEC/TS 60034-25 where required motor parameters are listed, but their definition and methods of determination are not included.

Documents
Document Sharing Hub

Full document details: IEC 60034-28 2012

ROTATING ELECTRICAL MACHINES –

Part 28: Test methods for determining quantities of equivalent circuit diagrams for three-phase low-voltage cage induction motors

1 Scope

This part of the IEC 60034 series applies to three-phase low-voltage cage induction motors of frame numbers 56 to 400 as specified in IEC 60072-1.

This standard establishes procedures to obtain values for elements of single phase equivalent circuit diagrams from tests and defines standard elements of these diagrams.

2 Normative references

The following documents, in whole or in part, are normatively referenced in this document and are indispensable for its application. For dated references, only the edition cited applies. For undated references, the latest edition of the referenced document (including any amendments) applies.

IEC 60034-1:2010, *Rotating electrical machines – Part 1: Rating and performance*

IEC 60034-2-1, *Rotating electrical machines – Part 2-1: Standard methods for determining losses and efficiency from tests (excluding machines for traction vehicles)*

IEC 60034-2-2, *Rotating electrical machines – Part 2-2: Specific methods for determining separate losses of large machines from tests – Supplement to IEC 60034-2-1*

IEC 60034-2-3[1], *Rotating electrical machines – Part 2-3: Specific test methods for determining losses and efficiency of converter-fed AC motors*

IEC/TS 60034-25[2], *Rotating electrical machines – Part 25: A.C. Motors when used in power drive systems - Application guide*

IEC 60044 (all parts), *Instrument transformers*

IEC 60051-1, *Direct acting indicating analogue electrical measuring instruments and their accessories – Part 1: Definitions and general requirements common to all parts*

IEC 60072-1, *Dimensions and output series for rotating electrical machines – Part 1: Frame numbers 56 to 400 and flange numbers 55 to 1080*

3 Terms, definitions, symbols and conventions

3.1 Terms and definitions

For the purposes of this document, the terms and definitions given in IEC 60034-1:2010 apply.

---

[1] To be published.

[2] A revision of this publication is currently under preparation.

Documents
Document Sharing Hub

Full document details: IEC 60034-28 2012

3.2 Symbols

The following symbols apply:

$\cos \varphi$	is the power factor
$\cos \varphi_N$	is the rated power factor
f	is the stator supply frequency, Hz
f_r	is the frequency of the rotor current (slip frequency), Hz
f_N	is the rated frequency, Hz
h	is the height of the rotor-conductor bar, m
H	is the motor frame size according to IEC 60072-1 (distance from the centre-line of the shaft to the bottom of the feet (basic dimension)), mm
I	is the stator line current, A
I_s	is the stator phase current, A
I_r'	is the rotor phase current, A
I_m	is the magnetizing current, A
I_N	is the rated stator current, A
k_i	is the skin effect factor for inductances
k_r	is the reciprocal of the temperature coefficient of resistance at 0 °C of the rotor conductor material, see Note 1
k_s	is the reciprocal of the temperature coefficient of resistance at 0 °C of the stator conductor material, see Note 1
k_σ	is the ratio of the stator to the rotor leakage inductances
L_m	is the magnetizing inductance, H
$L_{\sigma s}$	is the stator leakage inductance, H
$L_{\sigma r}'$	is the rotor leakage inductance, H
$L_{t\sigma}$	is the total leakage inductance (= $L_{\sigma s}$ + $L_{\sigma r}'$), H
$L_{\sigma a}$	is the total leakage inductance disregarding the skin effect, H
L_{ts}	is the total stator inductance (= L_m + $L_{\sigma s}$), H
L_{tr}'	is the total rotor inductance (= L_m + $L_{\sigma r}'$), H
n	is the operating speed, min^{-1}
n_N	is the rated speed, min^{-1}
n_{syn}	is the rated synchronous speed, min^{-1}
p	is the number of pole pairs
P_S	is the electrical input power, W
P_{2N}	is the mechanical output power, W
P_k	is the constant losses, W
P_{fw}	is the friction and windage losses, W
P_{fe}	is the iron losses, W
R	is the line-to-line resistance, Ω
R_{fe}	is the equivalent circuit resistance of iron losses, Ω
$R_{ll,m}$	is the stator line-to-line resistance at initial winding temperature, Ω
$R_{s,25°}$	is the stator phase-resistance corrected to a temperature of 25 °C, Ω
R_r'	is the rotor cage resistance, Ω
$R_{r,25°}'$	is the rotor resistance corrected to an ambient temperature of 25 °C, Ω

Documents
Document Sharing Hub
Full document details: IEC 60034-28 2012

$R_{r,m}'$ is the rotor resistance at initial winding temperature, Ω

s is the slip, in per unit value of synchronous speed

s_N is the rated slip

U is the stator terminal voltage, V

U_s is the stator phase voltage, V

U_m is the voltage drop over the magnetizing inductance, V

U_N is the rated terminal voltage, V

X_m is the magnetizing reactance (= $2\pi f_N \cdot L_m$), Ω

$X_{\sigma s}$ is the stator leakage reactance (= $2\pi f_N \cdot L_{\sigma s}$), Ω

$X_{\sigma r}'$ is the rotor leakage reactance (= $2\pi f_N \cdot L_{\sigma r}'$), Ω

$X_{t\sigma}$ is the total leakage reactance (= $2\pi f_N \cdot L_{t\sigma}$), Ω

$X_{\sigma a}$ is the total leakage reactance disregarding the skin effect (= $2\pi f_N \cdot L_{\sigma a}$), Ω

X_{ts} is the total stator reactance (= $2\pi f_N \cdot L_{ts}$), Ω

X_{tr}' is the total rotor reactance (= $2\pi f_N \cdot L_{tr}'$), Ω

Z is the line impedance, Ω

γ_r is the conductivity of rotor conductor, S/m, see Note 2

θ_0 is the temperature of the cold winding at initial resistance measurement, °C

θ_L is the temperature of the winding at the end of the thermal load test, °C

θ_{NL} is the temperature of the winding at the end of the thermal no-load test, °C

NOTE 1 For copper, use k = 235, for aluminium, use k = 225, unless otherwise specified.

NOTE 2 For copper rotor-bars, use $\gamma_r = 56 \times 10^6$ S/m, for aluminium rotor-bars, use $\gamma_r = 33 \times 10^6$ S/m unless otherwise specified.

NOTE 3 For calculations in this standard, voltages and currents are r.m.s. magnitude values (different from vectors in complex calculations).

NOTE 4 All rotor values are referred to the stator winding and frequency.

3.3 Subscripts

L, NL, 0	test conditions
m, ma, mb	magnetizing quantities
N	rated value
r, tr	rotor quantities
s, ts	stator quantities
σ, tσ	leakage quantities

3.4 Winding connection

The mathematical model of the machine shall be regarded as Y-connected, regardless of the actual connection of the motor (delta or star). The quantities in the equivalent circuit diagram shall be presented as per phase values in equivalent Y-connection.

NOTE For reference purposes the formulae required to calculate a delta-connected equivalent circuit diagram are also given as notes. In case of delta connected motors these formulae can be used to create an equivalent circuit diagram which represents the internal winding currents better than a circuit diagram in equivalent Y-connection.

Documents
Document Sharing Hub

Full document details: IEC 60034-28 2012

4 Test requirements

4.1 General

The tests shall be carried out with regard to the requirements for the tests given in IEC 60034-2-1, IEC 60034-2-2, IEC 60034-2-3 and IEC/TS 60034-25, as applicable.

4.2 Frequency and voltage

The frequency shall be within ± 0,3 % of specified test frequency during measurements. The form and symmetry of the supply voltage shall conform to the requirements of 8.3.1 of IEC 60034-1:2010.

4.3 Instrumentation

4.3.1 Measuring instruments for electrical quantities, speed and frequency

The measuring instruments shall have an accuracy class of 0,5 or better in accordance with IEC 60051-1. However, accuracy class for the measurement of resistance shall be 0,1.

Since instrument accuracy is generally expressed as a percentage of full scale, the range of the instrument chosen shall be as low as practical.

4.3.2 Instrument transformers

Instrument transformers shall have an accuracy class of 0,2 according to IEC 60044.

4.3.3 Temperature measurement

The instrumentation used to measure temperatures shall have an accuracy of ± 1 °C.

5 Approximations and uncertainties

The procedures described to obtain the values of the equivalent circuit diagram include approximations. Furthermore, the equivalent circuit diagram is an approximation in itself.

The inductances are determined depending on current in order to take saturation effects of the iron core into account. However, iron losses are disregarded in the determination formulae of all inductances.

Eddy current effects on inductances and resistances are disregarded because the application of the obtained equivalent circuit parameters is not intended to the start-up process of the motor (i.e. application to slips between 0 to ± 0,3).

The assumption of short-circuited rotor resistance during the determination of the total leakage inductance $L_{t\sigma}$ (7.4) will typically result in an error less than 5 % on the obtained value. The effect on the magnetizing inductance L_m (7.6) is negligible.

NOTE For very small motors (rated power less than 1 kW) the error can increase due to the relatively large values of rotor resistance.

Furthermore the relatively large rotor frequencies (at s = 2 or s = 1) during the tests for total leakage inductance require skin effect compensation. Unless rotor design data are available, the calculation must be based on an estimated rotor conductor-bar height (see 7.5.3.3). But rotor design data is preferable. This standard introduces an alternative procedure (7.5.4) for the determination of leakage inductances from a load curve test that avoids these difficulties.

Documents
Document Sharing Hub
Full document details: IEC 60034-28 2012

The distribution of the total leakage inductance $L_{t\sigma}$ into stator and rotor leakage inductances ($L_{\sigma s}$ and $L_{\sigma r}$', see 7.7) is based on rough assumptions and cannot be performed accurately by the methods described in this standard.

The difference between the rotor and winding temperature is neglected during the determination of rotor resistance R_r' (7.9).

While iron losses in the stator are included, those in the rotor are disregarded. This is a valid assumption for slips between 0 and breakdown slip. Therefore, the start-up situation cannot be represented correctly.

Furthermore this simplification gives rise to errors in the determination of leakage inductances from the reverse rotation test (see 6.6.2) since the rotor frequency becomes twice the rated frequency in this case.

To adjust the equivalent iron loss resistance to frequencies other than rated frequencies the distribution of hysteresis losses versus eddy current losses needs to be known. This standard presents a suitable approximation (see 7.4.3).

6 Test procedures

6.1 General

The subtests that make up this test procedure shall be performed in the sequence listed. It is not essential that the tests are carried out immediately one after another. However, if the subtests are performed individually, then the specified thermal conditions shall be re-established prior to obtaining the test data.

The arithmetic average of the three line currents and voltages shall be used. The stator line-to-line resistance is the value across any two terminals for which a reference value has been measured at known temperature.

It is recommended that whenever measurements of voltage, current, speed or power for a certain load point are required the actual test data is an average value of several samples taken in short time intervals to compensate for load fluctuations.

6.2 Stator d.c. line-to-line resistance measurement

The temperature of the winding when the resistance is measured shall not differ from the coolant by more than 2 K.

Measure and record $R_{ll,m}$. The resistance shall be taken as the average value from measurements of all three phases. Measure and record the winding temperature θ_0 according to 8.6.2 of IEC 60034-1:2010.

6.3 Load-test at rated load

Before starting to record data for this test, the temperature of the stator winding shall be within 2 K of the temperature obtained from a rated load thermal test (see IEC 60034-1).

Apply rated voltage of rated frequency to the terminals. Increase the load until the line current I equals rated current I_N.

Measure and record U, I, P_S and n. Measure and record the winding temperature θ_L according to 8.6.2 of IEC 60034-1:2010. The first reading of resistance shall be taken within the time specified in Table 5 of IEC 60034-1:2010.

Documents
Document Sharing Hub
Full document details: IEC 60034-28 2012

6.4 Load curve test

This test is only required for the determination procedure according to 7.5.4 and is an alternative to the reverse rotation and locked rotor tests (6.6).

Before starting to record data for this test, the temperature of the stator winding shall be within 5 K of the temperature obtained from a rated load thermal test (see IEC 60034-1).

Apply the load to the machine for at least 10 points. The load points should be chosen to be approximately equally spaced between not less than 25 % and up to and including 125 % load. When loading the machine, start at the highest load value and proceed in descending order to the lowest. The tests shall be performed as quickly as possible to minimize temperature changes in the machine during testing.

Measure the line-to-line resistance R before the highest and after the lowest reading. The resistance for 100 % load and higher loads shall be the value determined before the highest load reading. The resistance used for loads less than 100 % shall then be determined as linear with load, using the reading before the test for the highest load and after the lowest reading for the lowest load.

Preferably, resistances may also be determined by measuring the stator winding temperatures using a temperature-sensing device installed on the winding. Resistances for each load point may then be determined from the temperature of the winding at that point in relation to the resistance and temperature measured before the start of the test.

Measure and record for each load point U, I, P_S and n.

Determine R for each load point.

6.5 No-load test

The no-load test shall be started after the load test. Decouple the motor from any load or other machine. Run the motor without load until the no-load losses have stabilized.

This test should be done with a slip as close to zero as possible. Therefore, seals or other devices causing additional friction should be removed if suitable.

By adjusting the supply voltage at rated frequency, measure and record U, I and P_S for at least 10 values of voltage.

The highest voltage shall be selected according to the capabilities of the laboratory. However, it shall be not less than 110 % of the rated voltage of the motor and not exceed the value that will result in a no-load current greater than 150 % of rated current.

The lowest voltage shall be approximately 20 % of rated voltage. However, it shall not fall below the value where further reduction increases the current.

One of the test voltages shall be the rated voltage of the machine.

The test shall be carried out as quickly as possible with the readings taken in descending order of voltage.

After the test, measure and record the winding temperature θ_{NL} according to 8.6.2 of IEC 60034-1:2010. The first reading of resistance shall be taken within the time specified in Table 5 of IEC 60034-1:2010.

Documents
Document Sharing Hub

Full document details: IEC 60034-28 2012

6.6 Reverse rotation and locked rotor tests

6.6.1 General

Reverse rotation and locked rotor tests are only required for the determination procedure according to 7.5.3 and are an alternative to the load curve test (6.4).

For motors which do not use double-cage or deep bar rotor designs (i.e. small current displacement) the reverse rotation test (6.6.2) is recommended to improve accuracy. This is usually the case for motors up to frame size 132. For larger motors, the locked rotor test (6.6.3) may give better results. This test is not recommended for motors less than 1 kW rated output power (due to the inaccuracies resulting from the large rotor resistance of these machines).

6.6.2 Reverse rotation test

Couple the tested motor to an external machine. Drive the tested motor at synchronous speed n_{syn} by the external machine. Apply a low voltage of opposite phase sequence to the terminals of the machine ($f = -f_N$). The slip will become 2,0. Increase the voltage until the line current I equals 1,5 times rated current I_N.

The rate of temperature rise in rotor bars of 2-pole machines can be very large. In these cases, in order to avoid the rotor from being destroyed, a maximum current of 1,25 times rated current is recommended.

Measure and record U, I and P_S for at least 10 values of current approximately equally spaced between 150 % and 10 % of rated current I_N including one reading at rated current.

It is recommended that the current values used for this test match the values used in (6.5) at the best. The test shall be carried out as quickly as possible with the readings taken in descending order of voltage and current.

6.6.3 Locked rotor test

Lock the rotor and apply low voltage of rated frequency $f = f_N$ to the terminals. The slip is then 1,0. Increase the voltage until the line current I reaches up to 1,5 times rated current I_N maximum.

The rate of temperature rise in rotor bars of 2-pole machines can be very large. In these cases, in order to avoid the rotor from being destroyed, a maximum current of 1,25 times rated current is recommended.

Measure and record U, I and P_S for at least 10 values of current approximately equally spaced between maximum 150 % and 10 % of rated current I_N including one reading at rated current.

It is recommended that the current values used for this test match the values used in (6.5) at the best. The test shall be carried out as quickly as possible with the readings taken in descending order of voltage and current.

7 Determination of motor quantities

7.1 General

The type-T equivalent circuit diagram (Figure 1) is normative for the motors addressed in this standard. A simplified variant without the equivalent resistance of iron losses is given in Figure 2.

Documents
Document Sharing Hub
Full document details: IEC 60034-28 2012

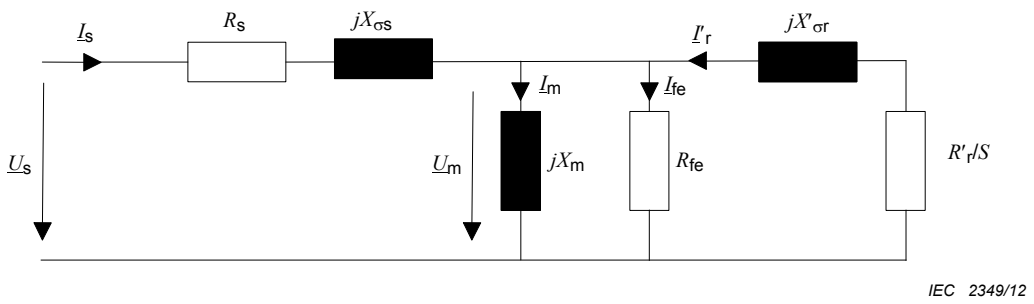

Figure 1 – Type-T equivalent circuit diagram

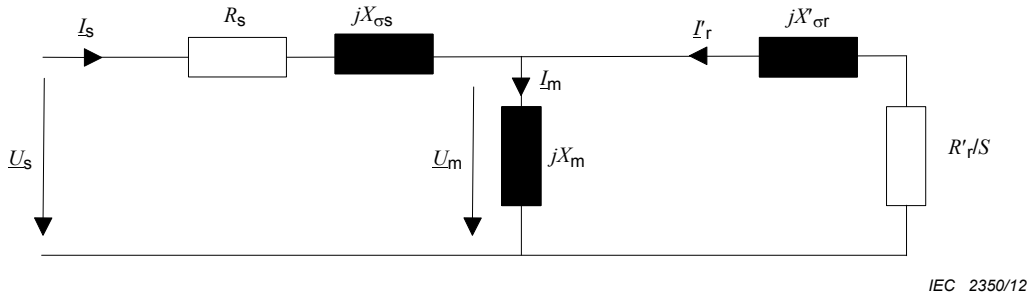

Figure 2 – Type-T equivalent circuit diagram (iron losses disregarded)

Resistances are corrected to an ambient temperature of 25 °C. They shall be converted to the actual motor temperature by the user before application of the values (for example by the frequency inverter depending on readings of a temperature sensing device).

The equivalent resistance of iron losses R_{fe} however shall not be temperature but frequency corrected when applying a frequency other than rated frequency.

The type-L (Figure 3) diagram is provided for illustrative purposes. Both type-L and type-Γ (Figure 4) diagrams are mathematically identical to the type-T diagram.

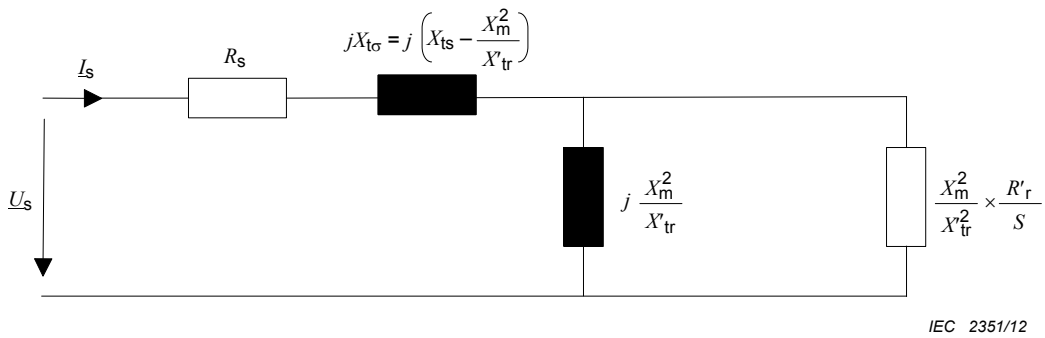

Figure 3 – Type-L equivalent circuit diagram (iron losses disregarded)

Documents
Document Sharing Hub
Full document details: IEC 60034-28 2012

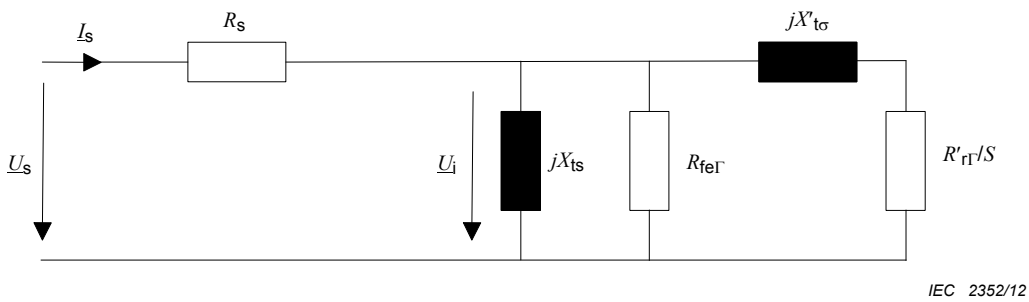

Figure 4 – Type-Γ equivalent circuit diagram

7.2 Resistance of stator winding R_s

The stator winding resistance R_s is determined from the measured line-to-line resistance $R_{ll,m}$ (see 6.2) corrected to a reference winding temperature of 25 °C

$$R_{s,25} = \frac{1}{2} \cdot R_{ll,m} \cdot \frac{k_s + 25}{k_s + \theta_0}$$

NOTE For the calculation of an equivalent circuit diagram for delta-connection: $R_{s,25} = \frac{3}{2} \cdot R_{ll,m} \cdot \frac{k_s + 25}{k_s + \theta_0}$

7.3 Total stator inductance $L_{ts} = L_m + L_{\sigma s}$

7.3.1 General

At s = 0, the equivalent rotor resistance R_r' / s becomes infinite and therefore the reactive part of the measured impedance results only from the serial connection of the two inductances.

NOTE See Figure 3: $L_{t\sigma} + \frac{L_m^2}{L_{tr}} = L_{ts} - \frac{L_m^2}{L_{tr}} + \frac{L_m^2}{L_{tr}} = L_{ts}$

In this case, the line-current I is equal to the magnetizing current I_m.

7.3.2 Determination procedure

For each of the measured no-load points (6.5):

Determine the line impedance $Z_{s=0} = \frac{U}{I \cdot \sqrt{3}}$

NOTE 1 For the calculation of an equivalent circuit diagram for delta-connection: $Z_{s=0} = \frac{U \cdot \sqrt{3}}{I}$

Determine the power factor: $\cos\varphi = \frac{P_1}{U \cdot I \cdot \sqrt{3}}$

Determine the resistance: $R_{s=0} = Z_{s=0} \cdot \cos\varphi$

Determine the magnetizing-current: $I_m = I$

Documents
Document Sharing Hub
Full document details: IEC 60034-28 2012

NOTE 2 For the calculation of an equivalent circuit diagram for delta-connection: $I_{\mathrm{m}} = \frac{I}{\sqrt{3}}$

Determine the total stator reactance: $X_{\mathrm{ts}} = \sqrt{Z_{\mathrm{s=0}}{}^2 - R_{\mathrm{s=0}}{}^2}$

Determine the total stator inductance: $L_{\mathrm{ts}} = \frac{X_{\mathrm{ts}}}{2\pi \cdot f_{\mathrm{N}}}$

Plot the values of L_{ts} against the values of I_{m} (see Figure 5 for a typical characteristic of inductance L against current I).

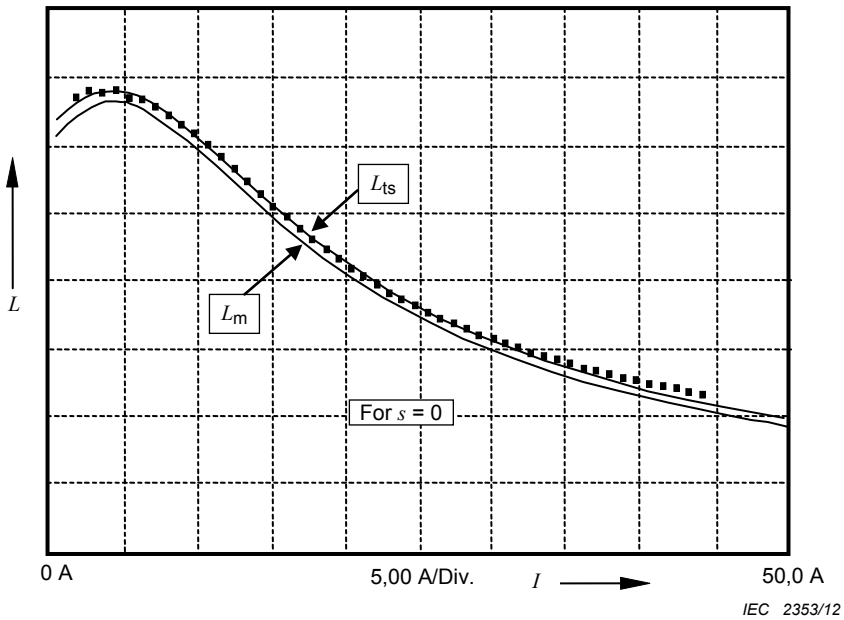

Figure 5 – Typical characteristics of inductance L over current I

Determine the inner machine voltage:

$$U_{\mathrm{i},s=0} = \sqrt{\left(\frac{U}{\sqrt{3}} - R_{s=0} \cdot I_{\mathrm{m}} \cdot \cos\varphi\right)^2 + \left(\sqrt{1-(\cos\varphi)^2} \cdot R_{s=0} \cdot I_{\mathrm{m}}\right)^2}$$

NOTE 3 For the calculation of an equivalent circuit diagram for delta-connection:

$$U_{\mathrm{i},s=0} = \sqrt{(U - R_{s=0} \cdot I_{\mathrm{m}} \cdot \cos\varphi)^2 + \left(\sqrt{1-(\cos\varphi)^2} \cdot R_{s=0} \cdot I_{\mathrm{m}}\right)^2}$$

Plot the values of L_{ts} against the values of $U_{\mathrm{i,s=0}}$.

7.4 Equivalent resistance of iron losses $R_{\mathrm{fe\Gamma}}$

7.4.1 Constant losses

Subtracting the no-load stator winding losses from the no-load power input gives the constant losses P_{k} which are the sum of the friction, windage and core losses.

Documents
Document Sharing Hub
Full document details: IEC 60034-28 2012

For each value of voltage recorded in 6.5, subtract the no-load stator winding losses from the input power to obtain the constant losses:

$$P_{\mathrm{k}} = P_{\mathrm{s}} - 3 \cdot I_{\mathrm{s}}^{2} \cdot R_{\mathrm{s},25^{\circ}} \cdot \frac{k_{\mathrm{s}} + \theta_{\mathrm{NL}}}{k_{\mathrm{s}} + 25}$$

where $I_{\mathrm{s}} = I$.

NOTE For the calculation of an equivalent circuit diagram for delta-connection: $I_{\mathrm{s}} = I / \sqrt{3}$.

7.4.2 Friction and windage losses

From the no-load loss values (6.5) use all those that show no significant saturation effect and develop a curve of constant losses (P_{k}), as determined in 7.4.1, against the voltage squared (U^2). Extrapolate a straight line to zero voltage. The intercept with the zero voltage axis is the friction and windage losses P_{fw}.

Friction and windage losses are considered to be independent of load. They are not included in the equivalent circuit diagram but can be taken into account by reduction of the calculated mechanical output power.

Friction losses are linearly dependent on motor speed n. Windage losses depend on the third power of the speed n^3.

7.4.3 Iron losses

Determine the iron losses from $P_{\mathrm{fe}} = P_{\mathrm{k}} - P_{\mathrm{fw}}$.

Determine the equivalent resistance of iron losses for the type-Γ equivalent circuit diagram (Figure 4) for rated voltage U_{N} and frequency f_{N}:

$$R_{\mathrm{fe}\Gamma} = \frac{3 \cdot U_{\mathrm{i,s=0}}^{2}}{P_{\mathrm{fe}}}$$

with $U_{\mathrm{i,s=0}}$ being the inner voltage as determined in 7.3 at the test-point at rated voltage.

The resistance $R_{\mathrm{fe}\Gamma}$ must not be temperature corrected when applying the equivalent circuit diagram.

However, the resistance $R_{\mathrm{fe}\Gamma}$ shall be corrected to $R_{\mathrm{fe}\Gamma}$' when calculating the equivalent circuit for a frequency f other than rated frequency f_{N} by the following formula:

$$R_{\mathrm{fe}\Gamma}' = R_{\mathrm{fe}\Gamma} \cdot \left(\frac{f}{f_{\mathrm{N}}} \right)^{0,5} \qquad \text{since} \qquad \frac{P_{\mathrm{fe}}'}{P_{\mathrm{fe}}} = \frac{U^2}{R_{\mathrm{fe}\Gamma}'} \cdot \frac{R_{\mathrm{fe}\Gamma}}{U_{\mathrm{N}}^{2}} \sim \frac{f^{1,5} \cdot \left(\frac{U}{f} \right)^{2}}{f_{\mathrm{N}}^{1,5} \cdot \left(\frac{U_{\mathrm{N}}}{f_{\mathrm{N}}} \right)^{2}}$$

The power value of 1,5 related to frequency variations is a compromise between the two parts that make up the iron losses (hysteresis losses ~ f and eddy current losses ~ f^2) and well-suited for electro sheet with losses of about 6,5 to 8,0 W/kg at 50 Hz, 1,5 T. For motors with electro sheet with losses of 4,0 W/kg or better, lower values may be more appropriate due to reduced impact of eddy current losses.

Documents
Document Sharing Hub
Full document details: IEC 60034-28 2012