IEC 60034-5

Edition 5.0 2020-04

INTERNATIONAL STANDARD

NORME INTERNATIONALE

colour inside

Rotating electrical machines –
Part 5: Degrees of protection provided by the integral design of rotating electrical machines (IP code) – Classification

Machines électriques tournantes –
Partie 5: Degrés de protection procurés par la conception intégrale de machines électriques tournantes (code IP) – Classification

IEC 60034-5:2020-04(en-fr)

AVA Documents
Document Sharing Hub

Full document details: IEC 60034-5-2020

THIS PUBLICATION IS COPYRIGHT PROTECTED
Copyright © 2020 IEC, Geneva, Switzerland

All rights reserved. Unless otherwise specified, no part of this publication may be reproduced or utilized in any form or by any means, electronic or mechanical, including photocopying and microfilm, without permission in writing from either IEC or IEC's member National Committee in the country of the requester. If you have any questions about IEC copyright or have an enquiry about obtaining additional rights to this publication, please contact the address below or your local IEC member National Committee for further information.

Droits de reproduction réservés. Sauf indication contraire, aucune partie de cette publication ne peut être reproduite ni utilisée sous quelque forme que ce soit et par aucun procédé, électronique ou mécanique, y compris la photocopie et les microfilms, sans l'accord écrit de l'IEC ou du Comité national de l'IEC du pays du demandeur. Si vous avez des questions sur le copyright de l'IEC ou si vous désirez obtenir des droits supplémentaires sur cette publication, utilisez les coordonnées ci-après ou contactez le Comité national de l'IEC de votre pays de résidence.

IEC Central Office
3, rue de Varembé
CH-1211 Geneva 20
Switzerland

Tel.: +41 22 919 02 11
info@iec.ch
www.iec.ch

About the IEC
The International Electrotechnical Commission (IEC) is the leading global organization that prepares and publishes International Standards for all electrical, electronic and related technologies.

About IEC publications
The technical content of IEC publications is kept under constant review by the IEC. Please make sure that you have the latest edition, a corrigendum or an amendment might have been published.

IEC publications search - webstore.iec.ch/advsearchform
The advanced search enables to find IEC publications by a variety of criteria (reference number, text, technical committee,…). It also gives information on projects, replaced and withdrawn publications.

IEC Just Published - webstore.iec.ch/justpublished
Stay up to date on all new IEC publications. Just Published details all new publications released. Available online and once a month by email.

IEC Customer Service Centre - webstore.iec.ch/csc
If you wish to give us your feedback on this publication or need further assistance, please contact the Customer Service Centre: sales@iec.ch.

Electropedia - www.electropedia.org
The world's leading online dictionary on electrotechnology, containing more than 22 000 terminological entries in English and French, with equivalent terms in 16 additional languages. Also known as the International Electrotechnical Vocabulary (IEV) online.

IEC Glossary - std.iec.ch/glossary
67 000 electrotechnical terminology entries in English and French extracted from the Terms and Definitions clause of IEC publications issued since 2002. Some entries have been collected from earlier publications of IEC TC 37, 77, 86 and CISPR.

A propos de l'IEC
La Commission Electrotechnique Internationale (IEC) est la première organisation mondiale qui élabore et publie des Normes internationales pour tout ce qui a trait à l'électricité, à l'électronique et aux technologies apparentées.

A propos des publications IEC
Le contenu technique des publications IEC est constamment revu. Veuillez vous assurer que vous possédez l'édition la plus récente, un corrigendum ou amendement peut avoir été publié.

Recherche de publications IEC - webstore.iec.ch/advsearchform
La recherche avancée permet de trouver des publications IEC en utilisant différents critères (numéro de référence, texte, comité d'études,…). Elle donne aussi des informations sur les projets et les publications remplacées ou retirées.

IEC Just Published - webstore.iec.ch/justpublished
Restez informé sur les nouvelles publications IEC. Just Published détaille les nouvelles publications parues. Disponible en ligne et une fois par mois par email.

Service Clients - webstore.iec.ch/csc
Si vous désirez nous donner des commentaires sur cette publication ou si vous avez des questions contactez-nous: sales@iec.ch.

Electropedia - www.electropedia.org
Le premier dictionnaire d'électrotechnologie en ligne au monde, avec plus de 22 000 articles terminologiques en anglais et en français, ainsi que les termes équivalents dans 16 langues additionnelles. Egalement appelé Vocabulaire Electrotechnique International (IEV) en ligne.

Glossaire IEC - std.iec.ch/glossary
67 000 entrées terminologiques électrotechniques, en anglais et en français, extraites des articles Termes et Définitions des publications IEC parues depuis 2002. Plus certaines entrées antérieures extraites des publications des CE 37, 77, 86 et CISPR de l'IEC.

Documents
Document Sharing Hub

Full document details: IEC 60034-5-2020

IEC 60034-5

Edition 5.0 2020-04

INTERNATIONAL STANDARD

NORME INTERNATIONALE

colour inside

Rotating electrical machines – Part 5: Degrees of protection provided by the integral design of rotating electrical machines (IP code) – Classification

Machines électriques tournantes – Partie 5: Degrés de protection procurés par la conception intégrale de machines électriques tournantes (code IP) – Classification

INTERNATIONAL ELECTROTECHNICAL COMMISSION

COMMISSION ELECTROTECHNIQUE INTERNATIONALE

ICS 29.160.01

ISBN 978-2-8322-8644-9

Warning! Make sure that you obtained this publication from an authorized distributor.
Attention! Veuillez vous assurer que vous avez obtenu cette publication via un distributeur agréé.

AVA Documents
Document Sharing Hub

® Registered trademark of the International Electrotechnical Commission
Marque déposée de la Commission Electrotechnique Internationale

Full document details: IEC 60034-5-2020

CONTENTS

FOREWORD 4
1 Scope 6
2 Normative references 6
3 Terms and definitions 6
4 Designation 7
4.1 General 7
4.2 Single characteristic numeral 7
4.3 Supplementary letters 7
4.4 Example of designation 7
5 Degrees of protection – First characteristic numeral 7
5.1 Indication of degree of protection 7
5.2 Compliance to indicated degree of protection 8
5.3 External fans 8
5.4 Drain holes 8
6 Degrees of protection – Second characteristic numeral 9
6.1 Indication of the degree of protection 9
6.2 Compliance with lower degrees of protection 10
7 Marking 10
8 General requirements for tests 11
8.1 General 11
8.2 Adequate clearance 11
8.2.1 General 11
8.2.2 Low-voltage machines (rated voltages not exceeding 1 000 V a.c. and 1 500 V d.c.) 11
8.2.3 High-voltage machines (rated voltages exceeding 1 000 V a.c. and 1 500 V d.c.) 11
9 Tests for first characteristic numeral 11
10 Tests for second characteristic numeral 15
10.1 Test conditions 15
10.2 Acceptance conditions 23
10.2.1 General 23
10.2.2 Ingress of water 24
10.2.3 Withstand voltage test 24
11 Requirements and tests for open weather-protected machines 24

Figure 1 – Standard test finger 14
Figure 2 – Equipment to prove protection against dust 15
Figure 3 – Equipment to prove protection against dripping water 18
Figure 4 – Equipment to prove protection against spraying and splashing water (shown with spraying holes in the case of second characteristic numeral 3) 19
Figure 5 – Hand-held equipment to prove protection against spraying and splashing water 20
Figure 6 – Standard nozzle for hose test 20
Figure 7 – Geometry of fan jet nozzle 21
Figure 8 – Measurement of the impact force 22

AVA Documents
Document Sharing Hub

Full document details: IEC 60034-5-2020

Figure 9 – Test set-up for determining the protection against high-pressure/steam-jet cleaning – degree of protection against ingress of water IP X9 for small enclosures 23

Table 1 – Test requirements for guards.....8
Table 2 – Degrees of protection indicated by the first characteristic numeral 9
Table 3 – Degrees of protection indicated by the second characteristic numeral 10
Table 4 – Test and acceptance conditions for first characteristic numeral 12
Table 5 – Test conditions for second characteristic numeral 16

Documents
Document Sharing Hub

Full document details: IEC 60034-5-2020

INTERNATIONAL ELECTROTECHNICAL COMMISSION

ROTATING ELECTRICAL MACHINES –

Part 5: Degrees of protection provided by the integral design of rotating electrical machines (IP code) – Classification

FOREWORD

1) The International Electrotechnical Commission (IEC) is a worldwide organization for standardization comprising all national electrotechnical committees (IEC National Committees). The object of IEC is to promote international co-operation on all questions concerning standardization in the electrical and electronic fields. To this end and in addition to other activities, IEC publishes International Standards, Technical Specifications, Technical Reports, Publicly Available Specifications (PAS) and Guides (hereafter referred to as "IEC Publication(s)"). Their preparation is entrusted to technical committees; any IEC National Committee interested in the subject dealt with may participate in this preparatory work. International, governmental and non-governmental organizations liaising with the IEC also participate in this preparation. IEC collaborates closely with the International Organization for Standardization (ISO) in accordance with conditions determined by agreement between the two organizations.
2) The formal decisions or agreements of IEC on technical matters express, as nearly as possible, an international consensus of opinion on the relevant subjects since each technical committee has representation from all interested IEC National Committees.
3) IEC Publications have the form of recommendations for international use and are accepted by IEC National Committees in that sense. While all reasonable efforts are made to ensure that the technical content of IEC Publications is accurate, IEC cannot be held responsible for the way in which they are used or for any misinterpretation by any end user.
4) In order to promote international uniformity, IEC National Committees undertake to apply IEC Publications transparently to the maximum extent possible in their national and regional publications. Any divergence between any IEC Publication and the corresponding national or regional publication shall be clearly indicated in the latter.
5) IEC itself does not provide any attestation of conformity. Independent certification bodies provide conformity assessment services and, in some areas, access to IEC marks of conformity. IEC is not responsible for any services carried out by independent certification bodies.
6) All users should ensure that they have the latest edition of this publication.
7) No liability shall attach to IEC or its directors, employees, servants or agents including individual experts and members of its technical committees and IEC National Committees for any personal injury, property damage or other damage of any nature whatsoever, whether direct or indirect, or for costs (including legal fees) and expenses arising out of the publication, use of, or reliance upon, this IEC Publication or any other IEC Publications.
8) Attention is drawn to the Normative references cited in this publication. Use of the referenced publications is indispensable for the correct application of this publication.
9) Attention is drawn to the possibility that some of the elements of this IEC Publication may be the subject of patent rights. IEC shall not be held responsible for identifying any or all such patent rights.

International Standard IEC 60034-5 has been prepared by IEC technical committee 2: Rotating machinery.

This bilingual version (2020-07) corresponds to the monolingual English version, published in 2020-04.

This fifth edition cancels and replaces the fourth edition, published in 2000, and its Amendment 1:2006. This edition constitutes a technical revision.

The main technical changes with respect to the previous edition are:

- the inclusion of an additional second numeral 9 including its test method,
- an additional note for clarification in Table 3,
- a clarification on the term open drain hole,
- a clarification on the ingress of dust in Table 4,
- pressure values given now in Pa only,
- a clarification in the scope on the applicability of this standard for (Ex) motors,

Documents
Document Sharing Hub

- a new Clause 3 with definitions,

The text of this International Standard is based on the following documents:

CDV	Report on voting
2/1960/CDV	2/1972A/RVC

Full information on the voting for the approval of this International Standard can be found in the report on voting indicated in the above table.

The French version of this standard has not been voted upon.

This document has been drafted in accordance with the ISO/IEC Directives, Part 2.

A list of all parts in the IEC 60034 series, published under the general title *Rotating electrical machines*, can be found on the IEC website.

The committee has decided that the contents of this document will remain unchanged until the stability date indicated on the IEC website under "http://webstore.iec.ch" in the data related to the specific document. At this date, the document will be

- reconfirmed,
- withdrawn,
- replaced by a revised edition, or
- amended.

IMPORTANT – The 'colour inside' logo on the cover page of this publication indicates that it contains colours which are considered to be useful for the correct understanding of its contents. Users should therefore print this document using a colour printer.

Documents
Document Sharing Hub

Full document details: IEC 60034-5-2020

ROTATING ELECTRICAL MACHINES –

Part 5: Degrees of protection provided by the integral design of rotating electrical machines (IP code) – Classification

1 Scope

This part of IEC 60034 applies to the classification of degrees of protection provided by enclosures for rotating electrical machines. It defines the requirements for protective enclosures that are in all other respects suitable for their intended use and which, from the point of view of materials and workmanship, ensure that the properties dealt with in this document are maintained under normal conditions of use.

This document does not specify degrees of protection against mechanical damage of the machine, or conditions such as moisture (produced for example by condensation), corrosive dust and vapour, fungus or vermin.

This document is also applicable to explosion proof machines, but it does not specifiy the types of protection for use in a potentially explosive (dust, gas) environment. Those are defined in the IEC 60079 series of standards.

In certain applications (such as agricultural or domestic appliances), more extensive precautions against accidental or deliberate contact may be specified.

This document gives definitions for standard degrees of protection provided by enclosures applicable to rotating electrical machines as regards the:

a) protection of persons against contacts with or approach to live parts and against contact with moving parts (other than smooth rotating shafts and the like) inside the enclosure and protection of the machine against ingress of solid foreign objects;

b) protection of machines against the harmful effects due to ingress of water;

c) protection of machines against the harmful effects due to ingress of dust.

It gives designations for these protective degrees and tests to be performed to check that the machines meet the requirements of this document.

2 Normative references

The following documents are referred to in the text in such a way that some or all of their content constitutes requirements of this document. For dated references, only the edition cited applies. For undated references, the latest edition of the referenced document (including any amendments) applies.

IEC 60034-6, *Rotating electrical machines – Part 6: Methods of cooling (IC code)*

3 Terms and definitions

For the purposes of this document, the following terms and definitions apply.

ISO and IEC maintain terminological databases for use in standardization at the following addresses:

- IEC Electropedia: available at http://www.electropedia.org/
- ISO Online browsing platform: available at http://www.iso.org/obp

Documents
Document Sharing Hub

Full document details: IEC 60034-5-2020

3.1
closed machine
machine where no medium from the surrounding medium, for the purpose of cooling, passes through the machine

[SOURCE: IEC 60050-411:1996, 411-44-17]

3.2
open machine
machine with an open cooling circuit in which the coolant is drawn directly from the surrounding medium passing through the machine and then returning directly to the surrounding medium

[SOURCE: IEC 60050-411:1996, 411-44-16]

4 Designation

4.1 General

The designation used for the degree of protection consists of the letters IP followed by two characteristic numerals signifying conformity with the conditions indicated in the tables of Clauses 5 and 6 respectively.

4.2 Single characteristic numeral

When it is required to indicate a degree of protection by only one characteristic numeral, the omitted numeral shall be replaced by the letter X, for example IPX5 or IP2X.

4.3 Supplementary letters

4.3.1 Additional information may be indicated by a supplementary letter following the second characteristic numeral. If more than one letter is used, the alphabetic sequence shall apply.

4.3.2 In special applications (such as machines with open circuit cooling for ship deck installation with air inlet and outlet openings closed during standstill), numerals may be followed by a letter indicating whether the protection against harmful effects due to ingress of water was verified or tested for the machine not running (letter S) or the machine running (letter M). In this case, the degree of protection in either state of the machine shall be indicated, for example IP55S/IP20M.

The absence of the letters S and M shall imply that the intended degree of protection will be provided under all normal conditions of use.

4.3.3 For air-cooled open machines suitable for specific weather conditions and provided with additional protective features or processes (as specified in Clause 11), the letter W may be used.

4.4 Example of designation

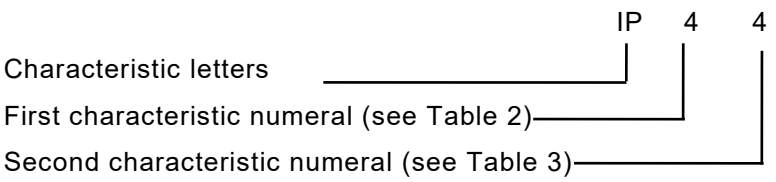

5 Degrees of protection – First characteristic numeral

5.1 Indication of degree of protection

The first characteristic numeral indicates the degree of protection provided by the enclosure to persons and to the parts of the machine inside the enclosure.

Table 2 gives, in the third column, brief details of objects which will be ‘excluded’ from the enclosure for each of the degrees of protection represented by the first characteristic numeral.

The term ‘excluded’ implies that a part of the body, a tool or a wire held by a person either will not enter the machine or, if it enters, that adequate clearance will be maintained between it and

AVA Documents Document Sharing Hub

Full document details: IEC 60034-5-2020

the live parts or dangerous moving parts (smooth rotating shafts and the like are not considered dangerous).

The third column of Table 2 also indicates the minimum size of solid foreign objects which will be excluded.

5.2 Compliance to indicated degree of protection

Compliance of an enclosure with an indicated degree of protection implies that the enclosure will also comply with all lower degrees of protection in Table 2. In consequence, the tests establishing these lower degrees of protection are not required, except in case of doubt.

5.3 External fans

The blades and spokes of fans external to the enclosure shall be protected against contact by means of guards complying with Table 1.

Table 1 – Test requirements for guards

Protection of machine	Test
IP1X	50 mm sphere test
IP2X to IP6X	Finger test

For the test, the rotor shall be slowly rotated, for example by hand when possible.

Smooth rotating shafts and similar parts are not considered dangerous.

5.4 Drain holes

If the machine is provided with drain holes, the following shall apply:

- drain holes intended normally to be open on site shall be kept open during testing;
- drain holes are considered as open as long as no breather(s) or plug(s), etc., are mounted in a drain;
- if machines with protection IP3X or IP4X are intended to be run with open drain holes, the drain holes may comply with protection IP2X;
- if machines with protection IP5X are intended to be run with open drain holes, the drain holes shall comply with protection IP4X.

Documents
Document Sharing Hub

Full document details: IEC 60034-5-2020

Table 2 – Degrees of protection indicated by the first characteristic numeral

First characteristic numeral	Degree of protection		Test conditions
	Brief description (NOTE 1)	Definition	
0	Non-protected machine	No special protection	No test
1 (NOTE 2)	Machine protected against solid objects greater than 50 mm	Accidental or inadvertent contact with or approach to live and moving parts inside the enclosure by a large surface of the human body, such as a hand (but no protection against deliberate access) Ingress of solid objects exceeding 50 mm in diameter	Table 4
2 (NOTE 2)	Machine protected against solid objects greater than 12 mm	Contact with or approach to live or moving parts inside the enclosure by fingers or similar objects not exceeding 80 mm in length Ingress of solid objects exceeding 12 mm in diameter	
3 (NOTE 2)	Machine protected against solid objects greater than 2,5 mm	Contact with or approach to live or moving parts inside the enclosure by tools or wires exceeding 2,5 mm in diameter Ingress of solid objects exceeding 2,5 mm in diameter	
4 (NOTE 2)	Machine protected against solid objects greater than 1 mm	Contact with or approach to live or moving parts inside the enclosure by wires or strips of thickness greater than 1 mm Ingress of solid objects exceeding 1 mm in diameter	
5 (NOTE 3)	Dust-protected machine	Contact with or approach to live or moving parts inside the enclosure Ingress of dust is not totally prevented but dust does not enter in sufficient quantity to interfere with satisfactory operation of the machine	
6	Dust-tight machines	Ingress of dust totally prevented	

NOTE 1 The brief description given in the second column of this table cannot be used to specify the type of protection.

NOTE 2 Machines assigned a first characteristic numeral 1, 2, 3 or 4 will exclude both regularly or irregularly shaped solid objects, provided that three normally perpendicular dimensions of the object exceed the appropriate figure in the 'Definition' column.

NOTE 3 The degree of protection against dust defined by this document is a general one. When the nature of the dust (dimensions of particles, their nature, for instance fibrous particles) is specified, test conditions can be determined by agreement between manufacturer and user.

6 Degrees of protection – Second characteristic numeral

6.1 Indication of the degree of protection

The second characteristic numeral indicates the degree of protection provided by the enclosure with respect to harmful effects due to ingress of water.

Table 3 gives, in the third column, details of the type of protection provided by the enclosure for each of the degrees of protection represented by the second characteristic numeral.

An air-cooled open machine is weather-protected when its design reduces the ingress of rain, snow and airborne particles, under specified conditions, to an amount consistent with correct operation.

This degree of protection is designated by the letter W placed after the second characteristic numeral.

Documents
Document Sharing Hub
Full document details: IEC 60034-5-2020

6.2 Compliance with lower degrees of protection

For second characteristic numerals up to and including 6, compliance of an enclosure with an indicated degree of protection implies that the enclosure will also comply with all lower degrees of protection in Table 3.

In consequence, the tests establishing these lower degrees of protection are not required, except in case of doubt.

For IPX7, IPX8 and IPX9, it shall not be assumed that compliance of the enclosure implies that the enclosure will also comply with all lower degrees of protection in Table 3.

Table 3 – Degrees of protection indicated by the second characteristic numeral

Second characteristic numeral	Degree of protection		Test conditions
	Brief description (NOTE 1)	Definition	
0	Non-protected machine	No special protection	No test
1	Machine protected against dripping water	Dripping water (vertically falling drops) shall have no harmful effect	Table 5
2	Machine protected against dripping water when tilted up to 15°	Vertically dripping water shall have no harmful effect when the machine is tilted at any angle up to 15° from its normal position	
3	Machine protected against spraying water	Water falling as a spray at an angle up to 60° from the vertical shall have no harmful effect	
4	Machine protected against splashing water	Water splashing against the machine from any direction shall have no harmful effect	
5	Machine protected against water jets	Water projected by a nozzle against the machine from any direction shall have no harmful effect (NOTE 3)	
6	Machine protected against heavy seas	Water from heavy seas or water projected in powerful jets shall not enter the machine in harmful quantities	
7	Machine protected against the effects of immersion	Ingress of water in the machine in a harmful quantity shall not be possible when the machine is immersed in water under stated conditions of pressure and time	
8	Machine protected against the effects of continuous submersion	The machine is suitable for continuous submersion in water under conditions which shall be specified by the manufacturer (NOTE 2)	
9	Machine protected against high pressure and high temperature water jets	Water projected at high pressure and high temperature against the enclosure from any direction shall have no harmful effects (NOTE 3)	

NOTE 1 The brief description given in the second column of this table cannot be used to specify the type of protection.

NOTE 2 Normally, this means that the machine is hermetically sealed. However, with certain types of machines it can mean that water can enter but only in such a manner that it produces no harmful effect.

NOTE 3 It is understood that protections as IPx5 or IPx9 are not equivalent to a total endurance to all weather conditions that can be present for a long period of time. Weather-proof could be achieved by providing additional protection.

7 Marking

It is recommended that the characteristic letters and numerals be marked on the machine preferably on the rating plate or, if this is not practicable, on the enclosure.

When all parts of a machine do not have the same degree of protection, at least the designation of the lowest degree shall be shown, followed, if necessary, by the higher designation with clear reference to the part to which it applies.

AVA Documents Document Sharing Hub

Full document details: IEC 60034-5-2020

Space limitations on the rating plate usually only allow the lowest IP code to be marked. Parts or components having a higher degree of protection should then be specified in the documentation and/or in the operating instructions.

The lower degree of protection of:

– guards for external fans (as allowed in 5.3);
– drain holes (as allowed in 5.4);

need not be specified on the rating plate or in the documentation.

Where the mounting of the machine has an influence on the degree of protection, the intended mounting arrangements shall be indicated by the manufacturer on the rating plate or in the instructions for mounting.

8 General requirements for tests

8.1 General

The tests specified in this document are type tests. They shall be carried out on standard products or models of them. Where this is not feasible, verification either by an alternative test or by examination of drawings shall be the subject of an agreement between manufacturer and user.

Unless otherwise specified, the machine for each test shall be clean with all the parts in place and mounted in the manner stated by the manufacturer.

In the case of both first and second characteristic numerals 1, 2, 3 and 4, a visual inspection may, in certain obvious cases, show that the intended degree of protection is obtained. In such cases, no test need be made. However, in case of doubt, tests shall be made as prescribed in Clauses 9 and 10.

8.2 Adequate clearance

8.2.1 General

For the purpose of the following test clauses in this document, the term ‘adequate clearance’ has the meaning given in 8.2.2 or 8.2.3.

8.2.2 Low-voltage machines (rated voltages not exceeding 1 000 V a.c. and 1 500 V d.c.)

The test device (sphere, finger, wire, etc.) does not touch the live parts or moving parts other than non-dangerous parts such as smooth rotating shafts.

8.2.3 High-voltage machines (rated voltages exceeding 1 000 V a.c. and 1 500 V d.c.)

When the test device is placed in the most unfavourable position, the machine shall be capable of withstanding the dielectric test applicable to the machine.

This dielectric test requirement may be replaced by a specified clearance dimension in air which would ensure that this test would be satisfactory under the most unfavourable electrical field configuration.

9 Tests for first characteristic numeral

Test and acceptance conditions for the first characteristic numeral are given in Table 4.

The dust test for numerals 5 and 6 shall be performed with the shaft stationary, provided that the difference in pressure between running and stationary (caused by fan effects) is lower than 2 kPa. If the pressure difference is greater than 2 kPa, the internal machine pressure during the dust test shall be depressed accordingly. Alternatively, the machine may be tested with the shaft rotating at rated speed.

Documents
Document Sharing Hub
Full document details: IEC 60034-5-2020

Table 4 – Test and acceptance conditions for first characteristic numeral

First characteristic numeral	Test and acceptance conditions
0	No test is required.
1	The test is made with a rigid sphere of $50^{+0,05}_{0}$ mm diameter applied against the opening(s) in the enclosure with a force of 45 N to 55 N. The protection is satisfactory if the sphere does not pass through any opening and adequate clearance is maintained to parts which are normally live in service or moving parts inside the machine.
2	a) Finger test The test is made with a metallic test finger as shown in Figure 1. Both joints of this finger may be bent through an angle of 90° with respect to the axis of the finger, but in one and the same direction only. The finger is pushed without undue force (not more than 10 N) against any openings in the enclosure and, if it enters, it is placed in every possible position. The protection is satisfactory if adequate clearance is maintained between the test finger and live or moving parts inside the enclosure. However, it is permissible to touch smooth rotating shafts and similar non-dangerous parts. For this test, the internal moving parts may be operated slowly, where this is possible. For tests on a low-voltage machine, a low-voltage supply (of not less than 40 V) in series with a suitable lamp may be connected between the test finger and the live parts inside the enclosure. Conducting parts covered only with varnish or paint, or protected by oxidation or by a similar process, shall be covered with a metal foil electrically connected to those parts which are nor-mally live in service. The protection is satisfactory if the lamp does not light. For high-voltage machines, adequate clearance is verified by a dielectric test, or by a measurement of clearance distance in accordance with the principles of 8.2.3. b) Sphere test The test is made with a rigid sphere of $12,5^{+0,05}_{0}$ mm diameter applied to the openings of the enclosure with a force of 27 N to 33 N. The protection is satisfactory if the sphere does not pass through any opening and adequate clearance is maintained to live or moving parts inside the machine.
3	The test is made with a straight rigid steel wire or rod of $2,5^{+0,05}_{0}$ mm diameter applied with a force of 2,7 N to 3,3 N. The end of the wire or rod shall be free from burrs and at right angles to its length. The protection is satisfactory if the wire or rod cannot enter the enclosure.
4	The test is made with a straight rigid steel wire of $1^{+0,05}_{0}$ mm diameter applied with a force of 0,9 N to 1,1 N. The end of the wire shall be free from burrs and at right angles to its length. The protection is satisfactory if the wire cannot enter the enclosure.

AVA Documents
Document Sharing Hub
Full document details: IEC 60034-5-2020

First characteristic numeral	Test and acceptance conditions
5	a) Dust test The test is made using equipment incorporating the basic principles shown in Figure 2, in which talcum powder is maintained in suspension in a suitable closed test chamber. The talcum powder used shall be able to pass through a square-meshed sieve having a nominal wire diameter of 50 µm and a nominal width between wires of 75 µm. The amount of talcum powder to be used is 2 kg/m^3 of the test chamber volume. It shall not be used for more than 20 tests. Electrical machines have an enclosure where the normal operating cycle of the machine causes reductions in the air pressure within the enclosure in relation to the ambient atmospheric pressures. These reductions may be due, for example, to thermal cycling effects (category 1). For this test the machine is supported inside the test chamber and the pressure inside the machine is maintained below atmospheric pressure by a vacuum pump. If the enclosure has a single drain hole, the suction connection shall be made to one hole specially provided for the purpose of the test, except if the drain hole is intended normally to be closed on site (see 5.4). The object of the test is to draw into the machine, if possible, at least 80 times the volume of air in the enclosure without exceeding an extraction rate of 60 volumes per hour with a suitable depression. In no event shall the depression exceed 2 kPa on the manometer shown in Figure 2. If an extraction rate of 40 to 60 volumes per hour is obtained, the test is stopped after 2 h. If, with a maximum depression of 2 kPa, the extraction rate is less than 40 volumes per hour, the test is continued until 80 volumes have been drawn through, or a period of 8 h has elapsed. If it is impracticable to test the complete machine in the test chamber, one of the following procedures shall be applied: – testing of individually enclosed sections of the machine (terminal boxes, slip-ring housings, etc.); – testing of representative parts of the machine, comprising components such as doors, ventilating openings, joints, shaft seals, etc., with the vulnerable parts of the machine, such as terminals, slip-rings, etc., in position at the time of testing; – testing of a smaller machine having the same full-scale design details; – testing under conditions determined by agreement between manufacturer and user. In the second and third cases, the volume of air to be drawn through the machine under test is as specified for the whole machine in full scale. The protection is satisfactory if, on inspection, talcum powder has not accumulated in a quantity or location such that it could interfere with the satisfactory operation of the machine or lead to tracking along the creepage distances. b) Wire test If the machine is intended to be run with open drain hole(s), these shall be tested in the same manner as the first characteristic numeral 4, that is, using a 1 mm diameter wire.
6	Test in accordance with 5 a). The protection is satisfactory if, on inspection, there is no ingress of talcum powder.

Documents
Document Sharing Hub
Full document details: IEC 60034-5-2020

Dimensions in millimetres

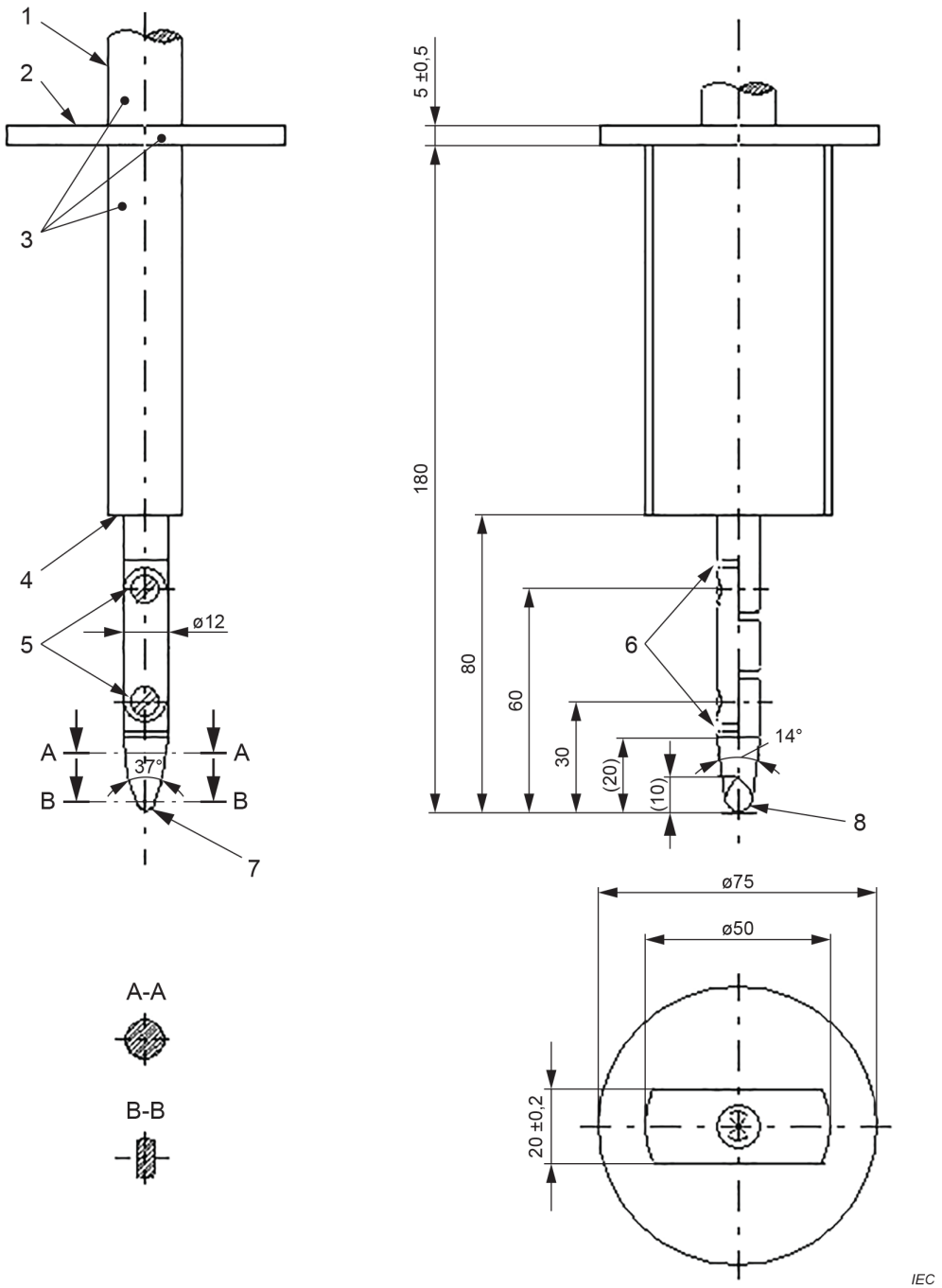

Key

1	Handle	4	Stop face	7	R2 ± 0,05 cylindrical
2	Guard	5	Joints	8	R4 ± 0,05 spherical
3	Insulating material	6	Chamfer all edges		

Tolerances on dimensions without specific tolerance:

on angles: $\left(^{0}_{-10}\right)$ °

on dimensions: up to 25 mm: $\left(^{0}_{-0,05}\right)$ mm; over 25 mm: ± 0,2 mm

Material for finger: e.g. heat-treated steel.

Both joints of this finger may be bent through an angle of $\left(90^{+10}_{0}\right)$ but in one and the same direction only.

Using the pin and groove solution is only one of the possible approaches in order to limit the bending angle to 90°. For this reason, dimensions and tolerances of these details are not given in the drawing. The actual design shall ensure a 90° bending angle with a 0° to +10° tolerance.

Figure 1 – Standard test finger

Documents
Document Sharing Hub
Full document details: IEC 60034-5-2020

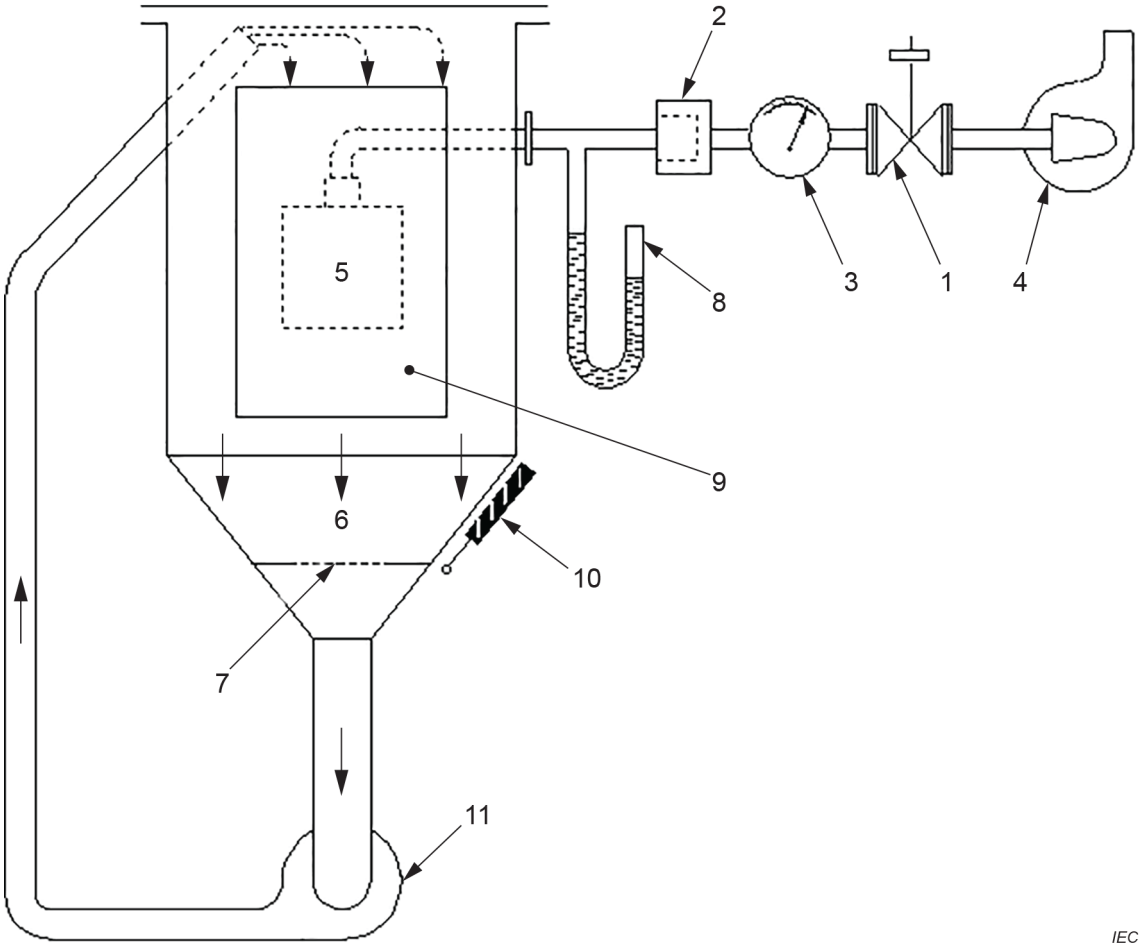

Key

1	Valve	5	Machine under test	9	Glass window
2	Dust filter	6	Talcum powder	10	Vibrator
3	Air flow meter	7	Guard screen	11	Circulating pump
4	Vacuum pump	8	Pressure gauge		

Figure 2 – Equipment to prove protection against dust

10 Tests for second characteristic numeral

10.1 Test conditions

Test conditions for the second characteristic numeral are given in Table 5.

The test shall be conducted with fresh water. During the test, the moisture contained inside the enclosure may be partly condensed. The dew which may thus be deposited should not be mistaken for an ingress of water.

For the purpose of the tests, the surface area of the machine shall be calculated with an accuracy of 10 %.

When possible, the machine shall be run at rated speed. This can be achieved by mechanical means or by energization. If the machine is energized, adequate safety precautions shall be taken.

Documents
Document Sharing Hub
Full document details: IEC 60034-5-2020