IEC 60068-2-31

Edition 2.0 2008-05

INTERNATIONAL STANDARD

NORME INTERNATIONALE

BASIC SAFETY PUBLICATION

PUBLICATION FONDAMENTALE DE SÉCURITÉ

Environmental testing –
Part 2-31: Tests – Test Ec: Rough handling shocks, primarily for equipment-type specimens

Essais d'environnement –
Partie 2-31: Essais – Essai Ec: Choc lié à des manutentions brutales, essai destiné en premier lieu aux matériels

IEC 60068-2-31:2008

Documents
Document Sharing Hub

Full document details: IEC 60068-2-31 2008

THIS PUBLICATION IS COPYRIGHT PROTECTED

Copyright © 2008 IEC, Geneva, Switzerland

All rights reserved. Unless otherwise specified, no part of this publication may be reproduced or utilized in any form or by any means, electronic or mechanical, including photocopying and microfilm, without permission in writing from either IEC or IEC's member National Committee in the country of the requester.
If you have any questions about IEC copyright or have an enquiry about obtaining additional rights to this publication, please contact the address below or your local IEC member National Committee for further information.

Droits de reproduction réservés. Sauf indication contraire, aucune partie de cette publication ne peut être reproduite ni utilisée sous quelque forme que ce soit et par aucun procédé, électronique ou mécanique, y compris la photocopie et les microfilms, sans l'accord écrit de la CEI ou du Comité national de la CEI du pays du demandeur.
Si vous avez des questions sur le copyright de la CEI ou si vous désirez obtenir des droits supplémentaires sur cette publication, utilisez les coordonnées ci-après ou contactez le Comité national de la CEI de votre pays de résidence.

IEC Central Office
3, rue de Varembé
CH-1211 Geneva 20
Switzerland
Email: inmail@iec.ch
Web: www.iec.ch

About the IEC

The International Electrotechnical Commission (IEC) is the leading global organization that prepares and publishes International Standards for all electrical, electronic and related technologies.

About IEC publications

The technical content of IEC publications is kept under constant review by the IEC. Please make sure that you have the latest edition, a corrigenda or an amendment might have been published.

- Catalogue of IEC publications: www.iec.ch/searchpub
The IEC on-line Catalogue enables you to search by a variety of criteria (reference number, text, technical committee,…). It also gives information on projects, withdrawn and replaced publications.
- IEC Just Published: www.iec.ch/online_news/justpub
Stay up to date on all new IEC publications. Just Published details twice a month all new publications released. Available on-line and also by email.
- Electropedia: www.electropedia.org
The world's leading online dictionary of electronic and electrical terms containing more than 20 000 terms and definitions in English and French, with equivalent terms in additional languages. Also known as the International Electrotechnical Vocabulary online.
- Customer Service Centre: www.iec.ch/webstore/custserv
If you wish to give us your feedback on this publication or need further assistance, please visit the Customer Service Centre FAQ or contact us:
Email: csc@iec.ch
Tel.: +41 22 919 02 11
Fax: +41 22 919 03 00

A propos de la CEI

La Commission Electrotechnique Internationale (CEI) est la première organisation mondiale qui élabore et publie des normes internationales pour tout ce qui a trait à l'électricité, à l'électronique et aux technologies apparentées.

A propos des publications CEI

Le contenu technique des publications de la CEI est constamment revu. Veuillez vous assurer que vous possédez l'édition la plus récente, un corrigendum ou amendement peut avoir été publié.

- Catalogue des publications de la CEI: www.iec.ch/searchpub/cur_fut-f.htm
Le Catalogue en-ligne de la CEI vous permet d'effectuer des recherches en utilisant différents critères (numéro de référence, texte, comité d'études,…). Il donne aussi des informations sur les projets et les publications retirées ou remplacées.
- Just Published CEI: www.iec.ch/online_news/justpub
Restez informé sur les nouvelles publications de la CEI. Just Published détaille deux fois par mois les nouvelles publications parues. Disponible en-ligne et aussi par email.
- Electropedia: www.electropedia.org
Le premier dictionnaire en ligne au monde de termes électroniques et électriques. Il contient plus de 20 000 termes et définitions en anglais et en français, ainsi que les termes équivalents dans les langues additionnelles. Egalement appelé Vocabulaire Electrotechnique International en ligne.
- Service Clients: www.iec.ch/webstore/custserv/custserv_entry-f.htm
Si vous désirez nous donner des commentaires sur cette publication ou si vous avez des questions, visitez le FAQ du Service clients ou contactez-nous:
Email: csc@iec.ch
Tél.: +41 22 919 02 11
Fax: +41 22 919 03 00

Documents
Document Sharing Hub

Full document details: IEC 60068-2-31 2008

IEC 60068-2-31

Edition 2.0 2008-05

INTERNATIONAL STANDARD

NORME INTERNATIONALE

BASIC SAFETY PUBLICATION
PUBLICATION FONDAMENTALE DE SÉCURITÉ

Environmental testing –
Part 2-31: Tests – Test Ec: Rough handling shocks, primarily for equipment-type specimens

Essais d'environnement –
Partie 2-31: Essais – Essai Ec: Choc lié à des manutentions brutales, essai destiné en premier lieu aux matériels

INTERNATIONAL
ELECTROTECHNICAL
COMMISSION

COMMISSION
ELECTROTECHNIQUE
INTERNATIONALE

PRICE CODE
CODE PRIX

P

ICS 19.040

ISBN 2-8318-9794-7

Documents
Document Sharing Hub

Full document details: IEC 60068-2-31 2008

CONTENTS

FOREWORD ... 3
1 Scope ... 5
2 Normative references ... 5
3 General description of test ... 6
4 Initial measurements ... 8
5 Testing ... 8
5.1 Drop and topple ... 8
5.1.1 Description ... 8
5.1.2 Test Facility ... 8
5.1.3 Testing procedures ... 8
5.2 Free fall – Procedure 1 ... 9
5.2.1 Description ... 9
5.2.2 Test Facility ... 9
5.2.3 Test severity ... 9
5.2.4 Testing procedures ... 9
5.3 Free fall repeated – Procedure 2 ... 10
5.3.1 Description ... 10
5.3.2 Test facility ... 10
5.3.3 Test severity ... 10
5.3.4 Testing procedure ... 10
6 Final measurements ... 10
7 Information to be included in the relevant specification ... 11
7.1 Drop and topple test ... 11
7.2 Free fall and free fall repeated tests ... 11
8 Information to be given in the test report ... 11
Annex A (normative) Test apparatus for repeated free fall test – Procedure 2 ... 13
Annex B (informative) Selection of test severities for free fall tests – Guidance ... 15

Figure 1 – Dropping on to a face ... 7
Figure 2 – Dropping on to a corner ... 7
Figure 3 – Topple (or push over) ... 7
Figure A.1 – Rotating (or tumbling) barrel ... 14

Table 1 – Fall heights versus mass ... 9
Table B.1 – Examples of typical test severities ... 16

Documents
Document Sharing Hub

Full document details: IEC 60068-2-31 2008

INTERNATIONAL ELECTROTECHNICAL COMMISSION

ENVIRONMENTAL TESTING –

Part 2-31: Tests – Test Ec: Rough handling shocks, primarily for equipment-type specimens

FOREWORD

1) The International Electrotechnical Commission (IEC) is a worldwide organization for standardization comprising all national electrotechnical committees (IEC National Committees). The object of IEC is to promote international co-operation on all questions concerning standardization in the electrical and electronic fields. To this end and in addition to other activities, IEC publishes International Standards, Technical Specifications, Technical Reports, Publicly Available Specifications (PAS) and Guides (hereafter referred to as "IEC Publication(s)"). Their preparation is entrusted to technical committees; any IEC National Committee interested in the subject dealt with may participate in this preparatory work. International, governmental and non-governmental organizations liaising with the IEC also participate in this preparation. IEC collaborates closely with the International Organization for Standardization (ISO) in accordance with conditions determined by agreement between the two organizations.
2) The formal decisions or agreements of IEC on technical matters express, as nearly as possible, an international consensus of opinion on the relevant subjects since each technical committee has representation from all interested IEC National Committees.
3) IEC Publications have the form of recommendations for international use and are accepted by IEC National Committees in that sense. While all reasonable efforts are made to ensure that the technical content of IEC Publications is accurate, IEC cannot be held responsible for the way in which they are used or for any misinterpretation by any end user.
4) In order to promote international uniformity, IEC National Committees undertake to apply IEC Publications transparently to the maximum extent possible in their national and regional publications. Any divergence between any IEC Publication and the corresponding national or regional publication shall be clearly indicated in the latter.
5) IEC provides no marking procedure to indicate its approval and cannot be rendered responsible for any equipment declared to be in conformity with an IEC Publication.
6) All users should ensure that they have the latest edition of this publication.
7) No liability shall attach to IEC or its directors, employees, servants or agents including individual experts and members of its technical committees and IEC National Committees for any personal injury, property damage or other damage of any nature whatsoever, whether direct or indirect, or for costs (including legal fees) and expenses arising out of the publication, use of, or reliance upon, this IEC Publication or any other IEC Publications.
8) Attention is drawn to the Normative references cited in this publication. Use of the referenced publications is indispensable for the correct application of this publication.
9) Attention is drawn to the possibility that some of the elements of this IEC Publication may be the subject of patent rights. IEC shall not be held responsible for identifying any or all such patent rights.

International Standard IEC 60068-2-31 has been prepared by IEC technical committee 104: Environmental conditions, classification and methods of test.

This second edition cancels and replaces the first edition, published in 1969 and constitutes a technical revision.

The major changes with regard to the previous edition concern the introduction of soft packaging tests, where appropriate. This new edition of IEC 60068-2-31 now incorporates the second edition of IEC 60068-2-32 (1975).

IEC 60068-2-32 will be withdrawn once this standard has been issued.

Documents
Document Sharing Hub

Full document details: IEC 60068-2-31 2008

The text of this standard is based on the following documents:

FDIS	Report on voting
104/458/FDIS	104/462/RVD

Full information on the voting for the approval of this standard can be found in the report on voting indicated in the above table.

This publication has been drafted in accordance with the ISO/IEC Directives, Part 2.

It has the status of a basic safety publication in accordance with IEC Guide 104.

A list of all the parts in the IEC 60068 series, under the general title *Environmental testing*, can be found on the IEC website.

The committee has decided that the contents of this publication will remain unchanged until the maintenance result date indicated on the IEC web site under "http://webstore.iec.ch" in the data related to the specific publication. At this date, the publication will be

- reconfirmed,
- withdrawn,
- replaced by a revised edition, or
- amended.

Documents
Document Sharing Hub

Full document details: IEC 60068-2-31 2008

ENVIRONMENTAL TESTING –

Part 2-31: Tests – Test Ec: Rough handling shocks, primarily for equipment-type specimens

1 Scope

This part of IEC 60068 deals with a test procedure for simulating the effects of rough handling shocks, primarily in equipment-type specimens, the effects of knocks, jolts and falls which may be received during repair work or rough handling in operational use.

This procedure does not simulate the effects of impacts received during transportation as loosely constrained cargo. Where the effects of loose cargo transportation are to be assessed, test Ee: Bounce should be used. Also this procedure does not simulate the effects of shock applied to installed equipments. Where this effect is to be assessed refer to test Ea: Shock.

Testing should only be specified for equipment likely to receive such rough handling, for example those of small to medium size and mass, and should only be applied to those faces and corners where there is a risk of such treatment being encountered.

In general, equipment which is frequently handled and serviced (for example field equipment and unit spares) can be considered at risk, whereas equipment forming an integral part of a permanent installation would not normally be considered at risk and need not be tested.

Testing may not be applicable to fragile unprotected equipment of irregular shape (for example aircraft nose radar) which, when removed from the installation would be contained in a handling frame or jig. It may however be applicable to these items of equipment when they are in their transit case or in their handling frame or jig.

For equipment which stands only on one face (for example the normal base) the test is generally only applied to that face.

Shock tests are performed on the specimen when fixed to the test machine. Drop and topple, free fall, repeated free fall and bounce tests are performed with the specimen free.

2 Normative references

The following referenced documents are indispensable for the application of this document. For dated references, only the edition cited applies. For undated references, the latest edition of the referenced document (including any amendments) applies.

IEC 60068-2-27, *Environmental testing – Part 2-27: Tests – Test Ea and guidance: Shock*

IEC 60068-2-55:1987, *Environmental testing – Part 2-55: Tests – Test Ee and guidance: Bounce*

IEC Guide 104,*The preparation of safety publications and the use of basic safety publications and group safety publications*

ISO 48:2007, *Rubber, vulcanized or thermoplastic – Determination of hardness (hardness between 10 IRHD and 100 IRHD)*

AVA Documents
Document Sharing Hub

Full document details: IEC 60068-2-31 2008

ISO 4180-2:1980, *Complete, filled transport packages – General rules for the compilation of performance test schedules – Part 2: Quantitative data*

3 General description of test

Rough handling shocks can be simulated by one or more of the following tests:

a) Drop and topple

A simple test intended to assess the effects of knocks or jolts likely to be received primarily by equipment-type specimens during repair work or rough handling on a table or bench.

b) Free fall – Procedure 1

A simple test to assess the effects of falls likely to be experienced due to rough handling. It is also suitable to demonstrate a degree of robustness.

c) Free fall – Procedure 2

A test that additionally simulates repetitive shocks likely to be received by certain component-type specimens, for example connectors in service.

The topple test need not be applied to specimens which have dimensions which make them stable whilst being handled. Reference to points 1) and 2) below should be made for information on the "*c* – *g* ratio" and "height ratio" to establish if the test is necessary.

The falling or topple actions produced by the test procedures given in 5.1.3.1, 5.1.3.2 and 5.1.3.3 are illustrated by Figures 1, 2 and 3.

The drop and topple test includes three distinct procedures:

i) dropping on to a face (5.1.3.1);

ii) dropping on to an edge or a corner (5.1.3.2);

iii) toppling (or pushover) (5.1.3.3).

The purpose of each of these procedures is basically the same, but they represent different kinds of handling.

The test is not intended to be a precise test and a tolerance of ±10 % is allowed on the heights and angles prescribed in 5.1.2.

NOTE For a more precise shock test, test Ea: Shock (IEC 60068-2-27) should be used.

The topple test need not be applied to specimens which have dimensions which make them stable while being handled. When considering the applicability of the topple test, two dimensional ratios are important:

1) the ratio of the height of the centre of gravity from the base, to the smaller dimension of the base, hereinafter referred to as the *c* – *g* ratio;

2) the ratio of the height of the specimen to the smaller dimension of the base, hereinafter referred to as the height ratio.

If the *c* – *g* ratio is small, for example less than 0,25, the specimen is unlikely to fall over due to sudden sideways displacements. If the height ratio is small, for example less than 0,5, the specimen is unlikely to topple over due to a sudden sideways force or blow at the top. In such cases the writer of the relevant specification should consider whether the topple test is applicable.

Documents
Document Sharing Hub

Full document details: IEC 60068-2-31 2008

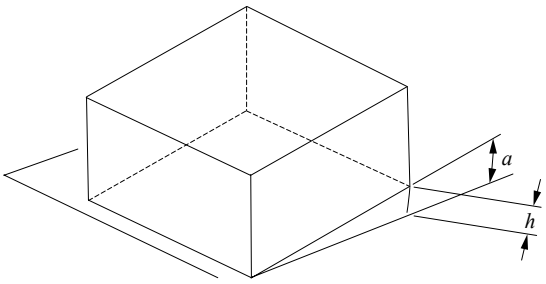

IEC 782/08

h = distance between edge of specimen and test surface

a = angle between bottom face of specimen and test surface

Figure 1 – Dropping on to a face

Dimensions in millimetres

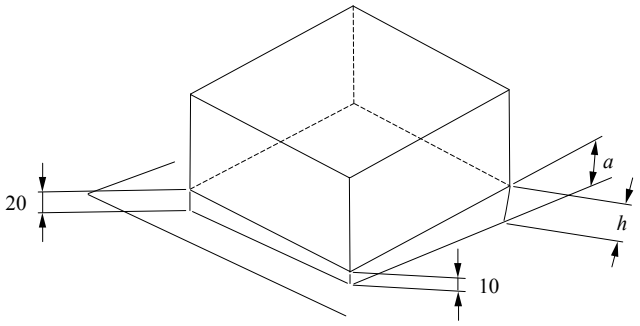

IEC 783/08

h = distance between edge of specimen and test surface

a = angle between bottom face of specimen and test surface

Figure 2 – Dropping on to a corner

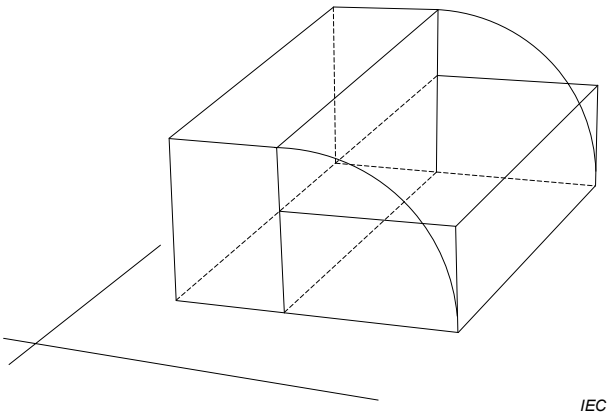

IEC 784/08

Figure 3 – Topple (or push over)

Documents
Document Sharing Hub

Full document details: IEC 60068-2-31 2008

4 Initial measurements

Before commencement of the test, the specimen shall be visually examined and electrically and mechanically checked as required by the relevant specification.

5 Testing

5.1 Drop and topple

5.1.1 Description

Having taken into account the manner in which the specimen will be handled in use and during repair, the relevant specification shall state the test procedure to be used and whether covers, cables, etc., are to be in position or not. The relevant specification shall also state whether the specimen is, or is not, operational during the test.

In the test procedure where the specimen is dropped on to a face or corner, it is possible for the specimen to topple onto a different face instead of falling back onto the test face as intended. This shall be avoided by a suitable method.

In any of the test procedures, the specimen shall not be allowed to continue rolling about the next edge.

Where the number of bottom edges exceeds four, the number of drops or topples shall be limited to four and the relevant specification shall prescribe the edges to be used for the test.

5.1.2 Test facility

The test facility surface shall be smooth, hard, rigid, unyielding, horizontal and, for example, made of concrete or steel. The steel plate shall be wet floated, that is, installed while the concrete is still wet in order to remove voids, or bonded to the concrete. The seismic reaction mass of the facility shall be at least 20 times the mass of the specimen under test. The thickness of the steel plate shall be a minimum of 25 mm. With a specimen in excess of 500 kg, the steel plate shall be at least 40 mm thick, level within two degrees to the horizontal and with a Brinell hardness of 90 – 300.

5.1.3 Testing procedures

5.1.3.1 Dropping onto a face

The specimen, standing in its normal position of use, is tilted along one bottom edge so that the distance between the opposite edge and the test surface is 25 mm, 50 mm or 100 mm, as prescribed by the relevant specification, or so that the angle made by the bottom and the test surface is 30°, whichever condition is less severe.

It is then allowed to fall freely onto the test surface.

The specimen shall be subjected to one drop along each of four bottom edges (see also Figure 1).

5.1.3.2 Dropping onto an edge or a corner

The specimen, standing in its normal position of use, is raised above the test surface by placing a wooden stud 10 mm high under one corner, and a 20 mm wooden stud under the other adjacent corner of one of the bottom edges. The specimen is then lifted above the test surface by rotating it about the edge on the two studs, until the other corner adjacent to the 10 mm stud is raised 25 mm, 50 mm or 100 mm, as prescribed in the relevant specification, or

Documents
Document Sharing Hub
Full document details: IEC 60068-2-31 2008

so that the angle made by the specimen and the test surface is 30°, whichever condition is less severe.

It is then allowed to fall freely on the test surface.

The specimen shall be subjected to one drop on each of the four bottom corners by applying the test along the four bottom edges in turn (see Figure 2).

5.1.3.3 Topple or push-over

The specimen, standing in its normal position of use, is tilted about one bottom edge until it reaches a position of instability. It is then allowed to fall over freely from this position on to an adjacent face.

The specimen shall be subjected to one topple about each of four bottom edges (see also Figure 3).

5.2 Free fall – Procedure 1

5.2.1 Description

The specimen shall be allowed to fall freely in its normal attitudes of transport or use, as prescribed in the relevant specification.

Unless otherwise prescribed in the relevant specification, the specimen shall be subjected to two falls from each prescribed attitude.

5.2.2 Test facility

The test facility used for free fall, procedure 1, is identical to that described in 5.1.2.

5.2.3 Test severity

Test severity is defined by the height of fall which shall be taken from the following series, taking into account the mass of the specimen, unless real usage conditions are known or as otherwise specified:

Table 1 – Fall heights versus mass

25 mm				Mass < 50 kg
50 mm,	**100** mm,	250 mm,	**500** mm	Mass < 10 kg
750 mm,	**1 000** mm	1500 mm		Mass < 1 kg

[a] The values in bold type are preferred values.

[b] For specimens in their transit case or for packed specimens, use the fall heights given in ISO 4180-2.

5.2.4 Testing procedures

The specimen shall be dropped onto the surface of the test facility, see 5.2.2, from a height selected from values in 5.2.3 and as prescribed in the relevant specification.

The height shall be measured from the part of the specimen nearest to the test surface, when the specimen is suspended prior to letting it fall.

AVA Documents
Document Sharing Hub

Full document details: IEC 60068-2-31 2008