IEC 60068-3-6

Edition 2.0 2018-01
REDLINE VERSION

INTERNATIONAL STANDARD

colour inside

Environmental testing –
Part 3-6: Supporting documentation and guidance – Confirmation of the performance of temperature/humidity chambers

Documents
Document Sharing Hub

IEC 60068-3-6:2018-01 RLV(en)

Full document details: IEC 60068-3-6 2018 RLV

THIS PUBLICATION IS COPYRIGHT PROTECTED

Copyright © 2018 IEC, Geneva, Switzerland

All rights reserved. Unless otherwise specified, no part of this publication may be reproduced or utilized in any form or by any means, electronic or mechanical, including photocopying and microfilm, without permission in writing from either IEC or IEC's member National Committee in the country of the requester. If you have any questions about IEC copyright or have an enquiry about obtaining additional rights to this publication, please contact the address below or your local IEC member National Committee for further information.

IEC Central Office
3, rue de Varembé
CH-1211 Geneva 20
Switzerland

Tel.: +41 22 919 02 11
info@iec.ch
www.iec.ch

About the IEC
The International Electrotechnical Commission (IEC) is the leading global organization that prepares and publishes International Standards for all electrical, electronic and related technologies.

About IEC publications
The technical content of IEC publications is kept under constant review by the IEC. Please make sure that you have the latest edition, a corrigenda or an amendment might have been published.

IEC Catalogue - webstore.iec.ch/catalogue
The stand-alone application for consulting the entire bibliographical information on IEC International Standards, Technical Specifications, Technical Reports and other documents. Available for PC, Mac OS, Android Tablets and iPad.

IEC publications search - webstore.iec.ch/advsearchform
The advanced search enables to find IEC publications by a variety of criteria (reference number, text, technical committee,…). It also gives information on projects, replaced and withdrawn publications.

IEC Just Published - webstore.iec.ch/justpublished
Stay up to date on all new IEC publications. Just Published details all new publications released. Available online and also once a month by email.

Electropedia - www.electropedia.org
The world's leading online dictionary of electronic and electrical terms containing 21 000 terms and definitions in English and French, with equivalent terms in 16 additional languages. Also known as the International Electrotechnical Vocabulary (IEV) online.

IEC Glossary - std.iec.ch/glossary
67 000 electrotechnical terminology entries in English and French extracted from the Terms and Definitions clause of IEC publications issued since 2002. Some entries have been collected from earlier publications of IEC TC 37, 77, 86 and CISPR.

IEC Customer Service Centre - webstore.iec.ch/csc
If you wish to give us your feedback on this publication or need further assistance, please contact the Customer Service Centre: sales@iec.ch.

AVA Documents
Document Sharing Hub

Full document details: IEC 60068-3-6 2018 RLV

IEC 60068-3-6

Edition 2.0 2018-01
REDLINE VERSION

INTERNATIONAL STANDARD

colour inside

Environmental testing –
Part 3-6: Supporting documentation and guidance – Confirmation of the performance of temperature/humidity chambers

INTERNATIONAL
ELECTROTECHNICAL
COMMISSION

ICS 19.040

ISBN 978-2-8322-5325-0

Warning! Make sure that you obtained this publication from an authorized distributor.

® Registered trademark of the International Electrotechnical Commission

Documents
Document Sharing Hub

Full document details: IEC 60068-3-6 2018 RLV

CONTENTS

FOREWORD 3
INTRODUCTION 5
1 Scope 6
2 Normative references 6
3 Terms and definitions 6
4 Measuring of performances 9
4.1 Test area environment 9
4.2 Measurement system 9
4.3 Temperature measurement system 9
4.4 Humidity measurement system 10
4.5 Temperature/humidity chamber test specimens 10
4.6 Specified location of temperature sensors and humidity sensor in working space 10
4.6.1 General 10
~~Installation of sensors ..... ~~
4.6.2 Temperature sensors 11
4.6.3 Humidity sensor 12
4.7 Measurement method 12
4.7.1 General 12
4.7.2 Achieved humidity 12
4.7.3 Temperature/humidity stabilization 13
4.7.4 Humidity fluctuation 13
4.7.5 Humidity gradient 14
4.7.6 Humidity variation in space 15
4.8 Standard humidity sequence 16
5 Information to be given in the performance test report 18
~~Determination of humidity performance ..... ~~
~~Evaluation criteria ..... ~~
Bibliography 19

Figure 1 – Example of humidity differences 8
Figure 2 – Working space 9
Figure 3 – Location sensors for temperature/humidity chambers up to 2 000 l 11
Figure 4 – Location of minimal additional sensors for temperature/humidity chambers over 2 000 l 11
Figure 5 – Example of achieved humidity 12
Figure 6 – Example of temperature/humidity stabilization 13
Figure 7 – Example of humidity fluctuation 14
Figure 8 – Example of humidity gradient for chambers up to 2 000 l 15
Figure 9 – Example of humidity variation in space for chambers up to 2000 l 16
Figure 10 – Example of climatogram 17

Table 1 – Practical dimensions 9
Table 2 – Example of test sequence 11

AVA Documents
Document Sharing Hub
Full document details: IEC 60068-3-6 2018 RLV

INTERNATIONAL ELECTROTECHNICAL COMMISSION

ENVIRONMENTAL TESTING –

Part 3-6: Supporting documentation and guidance – Confirmation of the performance of temperature/humidity chambers

FOREWORD

1) The International Electrotechnical Commission (IEC) is a worldwide organization for standardization comprising all national electrotechnical committees (IEC National Committees). The object of IEC is to promote international co-operation on all questions concerning standardization in the electrical and electronic fields. To this end and in addition to other activities, IEC publishes International Standards, Technical Specifications, Technical Reports, Publicly Available Specifications (PAS) and Guides (hereafter referred to as "IEC Publication(s)"). Their preparation is entrusted to technical committees; any IEC National Committee interested in the subject dealt with may participate in this preparatory work. International, governmental and non-governmental organizations liaising with the IEC also participate in this preparation. IEC collaborates closely with the International Organization for Standardization (ISO) in accordance with conditions determined by agreement between the two organizations.
2) The formal decisions or agreements of IEC on technical matters express, as nearly as possible, an international consensus of opinion on the relevant subjects since each technical committee has representation from all interested IEC National Committees.
3) IEC Publications have the form of recommendations for international use and are accepted by IEC National Committees in that sense. While all reasonable efforts are made to ensure that the technical content of IEC Publications is accurate, IEC cannot be held responsible for the way in which they are used or for any misinterpretation by any end user.
4) In order to promote international uniformity, IEC National Committees undertake to apply IEC Publications transparently to the maximum extent possible in their national and regional publications. Any divergence between any IEC Publication and the corresponding national or regional publication shall be clearly indicated in the latter.
5) IEC itself does not provide any attestation of conformity. Independent certification bodies provide conformity assessment services and, in some areas, access to IEC marks of conformity. IEC is not responsible for any services carried out by independent certification bodies.
6) All users should ensure that they have the latest edition of this publication.
7) No liability shall attach to IEC or its directors, employees, servants or agents including individual experts and members of its technical committees and IEC National Committees for any personal injury, property damage or other damage of any nature whatsoever, whether direct or indirect, or for costs (including legal fees) and expenses arising out of the publication, use of, or reliance upon, this IEC Publication or any other IEC Publications.
8) Attention is drawn to the Normative references cited in this publication. Use of the referenced publications is indispensable for the correct application of this publication.
9) Attention is drawn to the possibility that some of the elements of this IEC Publication may be the subject of patent rights. IEC shall not be held responsible for identifying any or all such patent rights.

This redline version of the official IEC Standard allows the user to identify the changes made to the previous edition. A vertical bar appears in the margin wherever a change has been made. Additions are in green text, deletions are in strikethrough red text.

Documents
Document Sharing Hub

Full document details: IEC 60068-3-6 2018 RLV

International Standard IEC 60068-3-6 has been prepared by IEC technical committee 104: Environmental conditions, classification and methods of test.

This second edition cancels and replaces the first edition published in 2001. This edition constitutes a technical revision.

This edition includes the following significant technical changes with respect to the previous edition:

a) Confirmation procedures are clarified.

The text of this International Standard is based on the following documents:

FDIS	Report on voting
104/760/FDIS	104/779/RVD

Full information on the voting for the approval of this International Standard can be found in the report on voting indicated in the above table.

This document has been drafted in accordance with the ISO/IEC Directives, Part 2.

IEC 60068-3-6 is to be read in conjunction with IEC 60068-3-5:2001 and IEC 60068-3-7:2001.

A list of all parts in the IEC 60068 series, published under the general title *Environmental testing*, can be found on the IEC website.

The committee has decided that the contents of this document will remain unchanged until the stability date indicated on the IEC website under "http://webstore.iec.ch" in the data related to the specific document. At this date, the document will be

- reconfirmed,
- withdrawn,
- replaced by a revised edition, or
- amended.

IMPORTANT – The “colour inside” logo on the cover page of this publication indicates that it contains colours which are considered to be useful for the correct understanding of its contents. Users should therefore print this publication using a colour printer.

Documents
Document Sharing Hub

Full document details: IEC 60068-3-6 2018 RLV

INTRODUCTION

IEC 60068 (all parts) contains fundamental information on environmental testing procedures and severities.

The expression "environmental conditioning" or "environmental testing" covers the natural and artificial environments to which components or equipment may be exposed so that an assessment can be made of their performance under conditions of use, transport and storage to which they may be exposed in practice.

Temperature and humidity chambers used for "environmental conditioning" or "environmental testing" are not described in any publication, although the method of maintaining and measuring temperature and/or humidity has a great influence on test results. The physical characteristics of temperature and humidity chambers can also influence test results.

Documents
Document Sharing Hub

Full document details: IEC 60068-3-6 2018 RLV

ENVIRONMENTAL TESTING –

Part 3-6: Supporting documentation and guidance – Confirmation of the performance of temperature/humidity chambers

1 Scope

This part of IEC 60068 provides a uniform and reproducible method of confirming that temperature and humidity test chambers, without ~~load~~ specimens, conform to the requirements specified in climatic test procedures ~~contained in~~ of IEC 60068-2 (all parts). This document is ~~destined~~ intended for users when conducting regular chamber performance monitoring.

2 Normative references

The following documents are referred to in the text in such a way that some or all of their content constitutes requirements of this document. For dated references, only the edition cited applies. For undated references, the latest edition of the referenced document (including any amendments) applies.

~~IEC 60068-3-4, *Environmental testing – Part 3-4: Supporting documentation and guidance – Damp heat tests*~~

IEC 60068-3-5:2001, *Environmental testing – Part 3-5: Supporting documentation and guidance – Confirmation of the performance of temperature chambers*

IEC 60068-3-7:2001, *Environmental testing – Part 3-7: Supporting documentation and guidance – Measurements in temperature chambers for tests A and B (with load)*

IEC 60068-3-11, *Environmental testing – Part 3-11: Supporting documentation and guidance – Calculation of uncertainty of conditions in climatic test chambers*

~~IEC 60584-1, *Thermocouples – Part 1: Reference tables*~~

~~IEC 60751, *Industrial platinum resistance, thermometer sensors*~~

~~ISO 10012-1, *Quality assurance requirements for measuring equipment – Part 1: Metrological confirmation system for measuring equipment*~~

~~ISO 10012-2, *Quality assurance for measuring equipment – Part 2: Guidelines for control of measurement processes*~~

~~ISO 4677-1, *Atmospheres for conditioning and testing – Determination of relative humidity – Part 1: Aspirated psychrometer method*~~

~~ISO *(unnumbered), Guide to the Expression of Uncertainty in Measurement*~~

3 Terms and definitions

For the purpose of this document, the following terms and definitions apply.

Documents
Document Sharing Hub

Full document details: IEC 60068-3-6 2018 RLV

ISO and IEC maintain terminological databases for use in standardization at the following addresses:

- IEC Electropedia: available at http://www.electropedia.org/
- ISO Online browsing platform: available at http://www.iso.org/obp

NOTE 1 For terms and definitions regarding temperature testing, refer to IEC 60068-3-5.

NOTE 2 Unless otherwise specified, "humidity" is relative humidity (RH).

3.1
temperature/humidity chamber
enclosure or space in some parts of which the temperature/humidity conditions specified in IEC 60068-2 (all parts) can be achieved

Note 1 to entry: See IEC 60068-3-4.

~~**3.2**~~
~~**generation of humidity**~~
~~see clause 3 of IEC 60068-3-4~~

3.2
absolute humidity
mass of water vapour present in a unit volume of moist air

Note 1 to entry: Typical units of measure are g/m3.

3.3
dewpoint
T_d
temperature at which the saturation vapour pressure over water ~~or ice~~ is equal to the partial pressure of the water vapour in the air

3.4
saturation vapour pressure
~~when a given volume of air, at a constant temperature, has water present and is incapable of holding any more water it is said to be saturated~~
maximum possible pressure exerted by a water vapour in equilibrium with its solid or liquid phase, such that any increase will initiate within the vapour a change to a more condensed state

3.5
partial vapour pressure
contribution of water vapour in a given volume of air at a constant pressure and temperature ~~to the pressure exerted by~~ of the atmosphere

3.6
relative humidity
RH
ratio of the partial vapour pressure, divided by the saturation vapour pressure of a given volume of air at a constant temperature, expressed as percentage

Note 1 to entry: The most popular method to express the water vapour content in air is relative humidity.

3.7
temperature/humidity stabilization
~~temperature/humidity in the chamber can be considered stable when all points in the working space have reached and have maintained the setpoint temperature/humidity within a given tolerance~~
state of maintaining temperature/humidity within specified tolerance for a specified time at specified points in the working space

AVA Documents
Document Sharing Hub
Full document details: IEC 60068-3-6 2018 RLV

3.8
achieved humidity
~~humidity in the chamber at any point within the working space after stabilization~~
stabilized humidity which desired humidity at the centre of the working space achieves within specified tolerance

3.9
climatogram
graphic display of combined temperature with relative humidity

Note 1 to entry: See Figure 9.

3.10
relative humidity fluctuation
~~fluctuation calculated with the temperature sensor which has the largest fluctuation~~
difference, after stabilization, between the maximum and minimum humidity at specified points in the working space during a specified interval of time

Note 1 to entry: For calibration, the centre point of working space may be used.

3.11
relative humidity gradient
~~gradient whose predominant contribution is caused by the temperature gradient in the working space~~
maximum difference in mean humidity value, after stabilization, at any moment in time between two separate points in the working space

Note 1 to entry: The absolute humidity of the air can be considered to be the same throughout the working space.

Note 2 to entry: See Figure 1.

3.12
relative humidity variation in space
difference in mean value, after stabilization, at any moment in time between the humidity at the centre of the working space and at any other point in the working space

Note 1 to entry: See Figure 1.

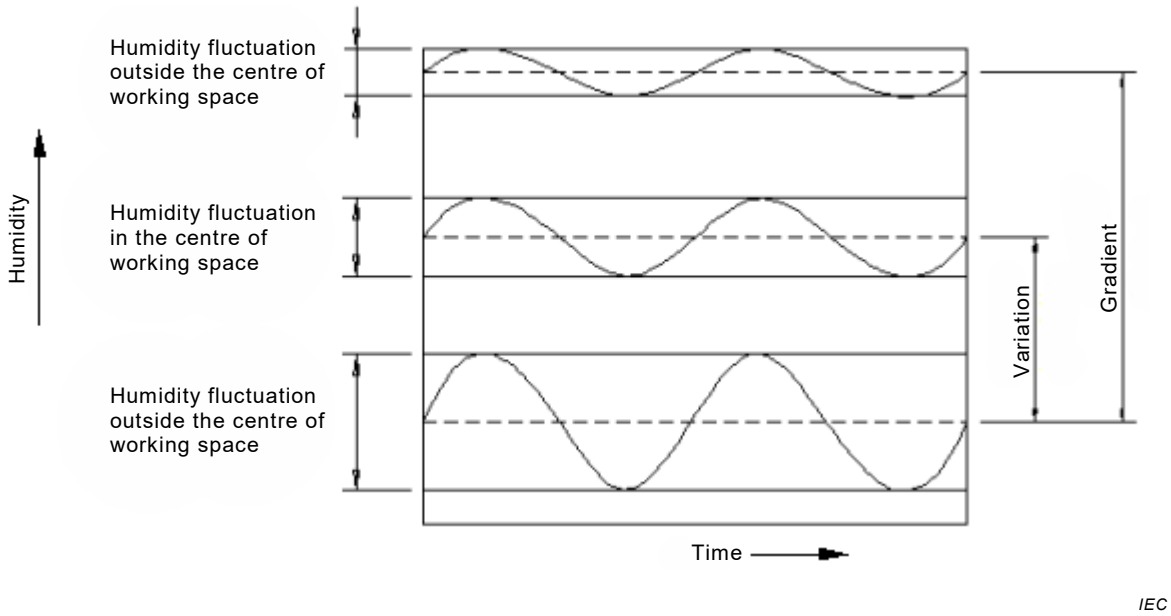

Figure 1 – Example of humidity differences

Documents
Document Sharing Hub
Full document details: IEC 60068-3-6 2018 RLV

3.13
working space
part of the chamber in which the specified conditions can be maintained within the specified tolerances

Note 1 to entry: See Figure 2 and Table 1.

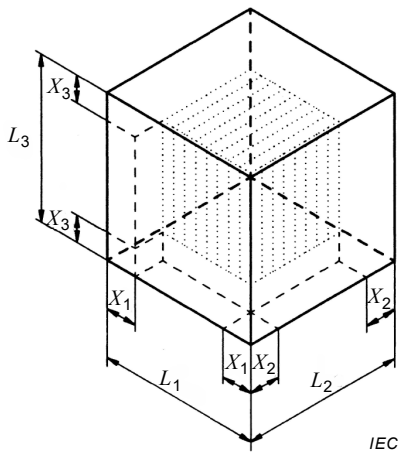

NOTE Practical dimensions of working space see Table 1.

Figure 2 – Working space

Table 1 – Practical dimensions

Size	Volume l	Distance X mm	X (min.) mm
Small	Up to 1 000	$L/10$	50
Medium	1 000 to 2 000	$L/10$	100
Large	More than 2 000	$L/10$	150
NOTE Not all chambers are cubic in construction.			

4 Measuring of performances

4.1 Test area environment

The environment around a temperature/humidity test chamber may influence the conditions inside the test chamber.

The confirmation of performance of a temperature/humidity chamber should be carried out under standard atmospheric conditions specified in IEC 60068-1.

4.2 Measurement system

When performing an assessment of a temperature/humidity chamber, a temperature/humidity measuring system, which is independent of the chamber's control system should be used.

4.3 Temperature measurement system

~~In accordance with~~ See IEC 60068-3-5.

Documents
Document Sharing Hub
Full document details: IEC 60068-3-6 2018 RLV

4.4 Humidity measurement system

The uncertainty of measurement of the output of the measurement system should be determined by calibration of the system~~, traceable to international standards (see ISO 10012-1 and ISO 10012-2).The measurement system should have a calibration at the test conditions~~, traceable to international standards (see ISO 10012~~-1 and ISO 10012-2~~) and the overall measurement uncertainty should be established using~~ the~~ ISO/IEC Guide 98-3 related to the expression of uncertainty in measurement.

Some examples of humidity measurement systems include, but are not limited to, those listed below.

a) Wet and dry bulb method

This method~~ (see ISO 4677-1)~~ uses the cooling effect of water evaporation from a wet sock. The temperature of the sock is measured with a temperature sensor whilst simultaneously measuring the temperature of the air with a second temperature sensor.

b) Dewpoint mirror method

This method cools the surface of the mirror until condensation occurs on it. The temperature indicated is the dewpoint temperature.

c) Lithium chloride sensor

This method gives absolute humidity values (dewpoint temperature).

d) Capacitive sensor

Permeation of humidity changes the dielectric properties of certain materials and this is used for direct measurement of relative humidity.

4.5 Temperature/humidity chamber test specimens

All measurements described below are performed with an empty working space. For measuring with test specimens (with or without heat dissipation), see IEC 60068-3-7.

4.6 Specified location of temperature sensors and humidity sensor in working space

4.6.1 General

Temperature measuring sensors are located in each corner and in the centre of the working space (see Figure 3, minimum 9 sensors). Humidity measuring sensor is located in the centre of the working space. For temperature/humidity chambers over 2 000 l, additional temperature sensors should be located in front of the centre of each wall (see Figure 4, minimum 15 sensors).

Documents
Document Sharing Hub

Full document details: IEC 60068-3-6 2018 RLV

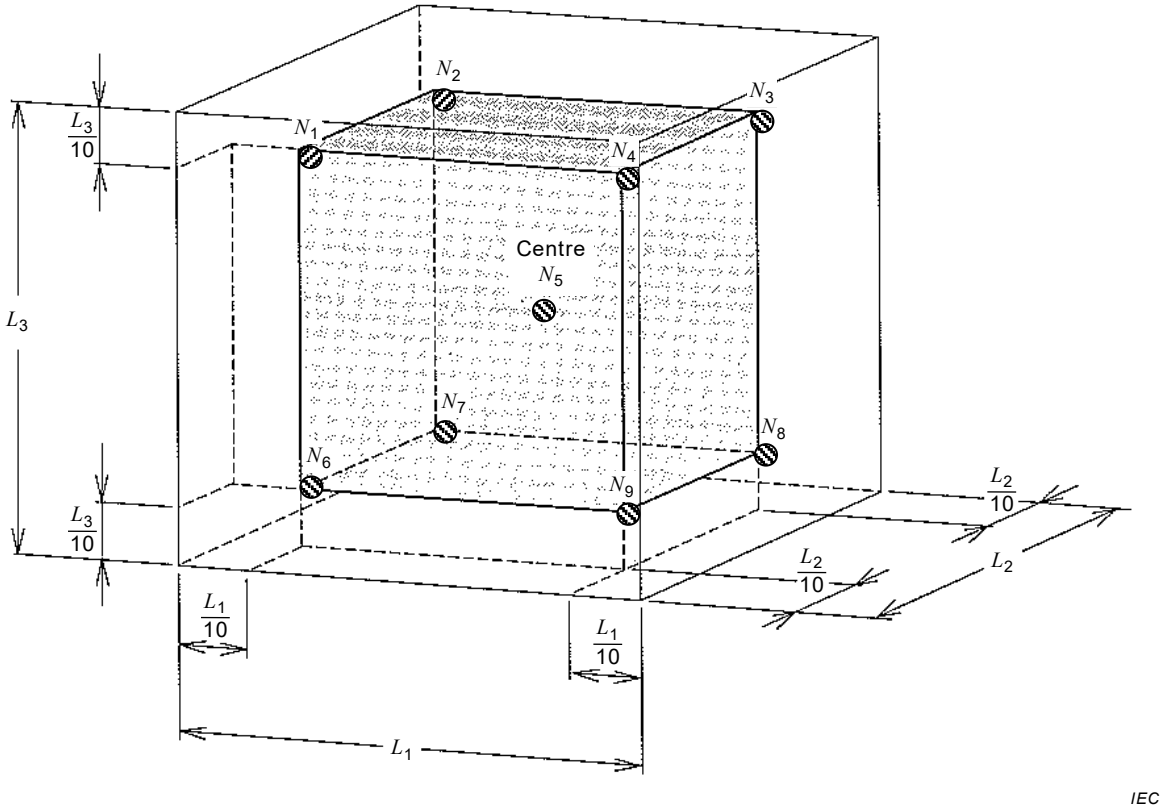

Figure 3 – Location of sensors for temperature/humidity chambers up to 2 000 l

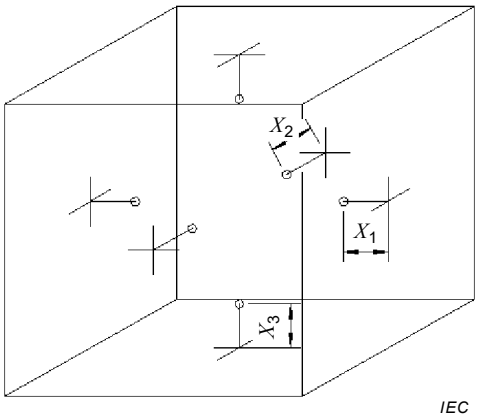

Figure 4 – Location of minimal additional sensors for temperature/humidity chambers over 2 000 l

~~**4.4 Installation of sensors**~~

4.6.2 Temperature sensors

~~Normally sensors should be either the resistance type (in accordance with IEC 60751) or the thermocouple type (in accordance with IEC 60584-1). The 50 % response time in air of the sensor shall be between 10 s and 40 s. The response time of the overall system should be less than 40 s.~~

~~In a temperature range from –200 °C to +200 °C the sensor measurement uncertainty should be in accordance with class A of IEC 60751.~~

See IEC 60068-3-5, 4.2.

Documents
Document Sharing Hub
Full document details: IEC 60068-3-6 2018 RLV