IEC 60068-3-6

Edition 2.0 2018-01

INTERNATIONAL STANDARD

NORME INTERNATIONALE

Environmental testing –
Part 3-6: Supporting documentation and guidance – Confirmation of the performance of temperature/humidity chambers

Essais d'environnement –
Partie 3-6: Documentation d'accompagnement et guide – Confirmation des performances des chambres d'essai en température/humidité

IEC 60068-3-6:2018-01(en-fr)

Documents
Document Sharing Hub

Full document details: IEC 60068-3-6-2018

THIS PUBLICATION IS COPYRIGHT PROTECTED
Copyright © 2018 IEC, Geneva, Switzerland

All rights reserved. Unless otherwise specified, no part of this publication may be reproduced or utilized in any form or by any means, electronic or mechanical, including photocopying and microfilm, without permission in writing from either IEC or IEC's member National Committee in the country of the requester. If you have any questions about IEC copyright or have an enquiry about obtaining additional rights to this publication, please contact the address below or your local IEC member National Committee for further information.

Droits de reproduction réservés. Sauf indication contraire, aucune partie de cette publication ne peut être reproduite ni utilisée sous quelque forme que ce soit et par aucun procédé, électronique ou mécanique, y compris la photocopie et les microfilms, sans l'accord écrit de l'IEC ou du Comité national de l'IEC du pays du demandeur. Si vous avez des questions sur le copyright de l'IEC ou si vous désirez obtenir des droits supplémentaires sur cette publication, utilisez les coordonnées ci-après ou contactez le Comité national de l'IEC de votre pays de résidence.

IEC Central Office
3, rue de Varembé
CH-1211 Geneva 20
Switzerland

Tel.: +41 22 919 02 11
info@iec.ch
www.iec.ch

About the IEC
The International Electrotechnical Commission (IEC) is the leading global organization that prepares and publishes International Standards for all electrical, electronic and related technologies.

About IEC publications
The technical content of IEC publications is kept under constant review by the IEC. Please make sure that you have the latest edition, a corrigendum or an amendment might have been published.

IEC publications search - webstore.iec.ch/advsearchform
The advanced search enables to find IEC publications by a variety of criteria (reference number, text, technical committee,…). It also gives information on projects, replaced and withdrawn publications.

IEC Just Published - webstore.iec.ch/justpublished
Stay up to date on all new IEC publications. Just Published details all new publications released. Available online and once a month by email.

IEC Customer Service Centre - webstore.iec.ch/csc
If you wish to give us your feedback on this publication or need further assistance, please contact the Customer Service Centre: sales@iec.ch.

Electropedia - www.electropedia.org
The world's leading online dictionary on electrotechnology, containing more than 22 000 terminological entries in English and French, with equivalent terms in 16 additional languages. Also known as the International Electrotechnical Vocabulary (IEV) online.

IEC Glossary - std.iec.ch/glossary
67 000 electrotechnical terminology entries in English and French extracted from the Terms and Definitions clause of IEC publications issued since 2002. Some entries have been collected from earlier publications of IEC TC 37, 77, 86 and CISPR.

A propos de l'IEC
La Commission Electrotechnique Internationale (IEC) est la première organisation mondiale qui élabore et publie des Normes internationales pour tout ce qui a trait à l'électricité, à l'électronique et aux technologies apparentées.

A propos des publications IEC
Le contenu technique des publications IEC est constamment revu. Veuillez vous assurer que vous possédez l'édition la plus récente, un corrigendum ou amendement peut avoir été publié.

Recherche de publications IEC - webstore.iec.ch/advsearchform
La recherche avancée permet de trouver des publications IEC en utilisant différents critères (numéro de référence, texte, comité d'études,…). Elle donne aussi des informations sur les projets et les publications remplacées ou retirées.

IEC Just Published - webstore.iec.ch/justpublished
Restez informé sur les nouvelles publications IEC. Just Published détaille les nouvelles publications parues. Disponible en ligne et une fois par mois par email.

Service Clients - webstore.iec.ch/csc
Si vous désirez nous donner des commentaires sur cette publication ou si vous avez des questions contactez-nous: sales@iec.ch.

Electropedia - www.electropedia.org
Le premier dictionnaire d'électrotechnologie en ligne au monde, avec plus de 22 000 articles terminologiques en anglais et en français, ainsi que les termes équivalents dans 16 langues additionnelles. Egalement appelé Vocabulaire Electrotechnique International (IEV) en ligne.

Glossaire IEC - std.iec.ch/glossary
67 000 entrées terminologiques électrotechniques, en anglais et en français, extraites des articles Termes et Définitions des publications IEC parues depuis 2002. Plus certaines entrées antérieures extraites des publications des CE 37, 77, 86 et CISPR de l'IEC.

Documents
Document Sharing Hub

Full document details: IEC 60068-3-6-2018

IEC 60068-3-6

Edition 2.0 2018-01

INTERNATIONAL STANDARD

NORME INTERNATIONALE

Environmental testing –
Part 3-6: Supporting documentation and guidance – Confirmation of the performance of temperature/humidity chambers

Essais d'environnement –
Partie 3-6: Documentation d'accompagnement et guide – Confirmation des performances des chambres d'essai en température/humidité

INTERNATIONAL
ELECTROTECHNICAL
COMMISSION

COMMISSION
ELECTROTECHNIQUE
INTERNATIONALE

ICS 19.040

ISBN 978-2-8322-7180-3

Warning! Make sure that you obtained this publication from an authorized distributor.
Attention! Veuillez vous assurer que vous avez obtenu cette publication via un distributeur agréé.

® Registered trademark of the International Electrotechnical Commission
Marque déposée de la Commission Electrotechnique Internationale

Documents
Document Sharing Hub

Full document details: IEC 60068-3-6-2018

CONTENTS

FOREWORD ... 3
INTRODUCTION ... 5
1 Scope ... 6
2 Normative references ... 6
3 Terms and definitions ... 6
4 Measuring of performances ... 9
4.1 Test area environment ... 9
4.2 Measurement system ... 9
4.3 Temperature measurement system ... 9
4.4 Humidity measurement system ... 9
4.5 Temperature/humidity chamber test specimens ... 10
4.6 Specified location of temperature sensors and humidity sensor in working space ... 10
4.6.1 General ... 10
4.6.2 Temperature sensors ... 11
4.6.3 Humidity sensor ... 11
4.7 Measurement method ... 11
4.7.1 General ... 11
4.7.2 Achieved humidity ... 11
4.7.3 Temperature/humidity stabilization ... 12
4.7.4 Humidity fluctuation ... 12
4.7.5 Humidity gradient ... 13
4.7.6 Humidity variation in space ... 14
4.8 Standard humidity sequence ... 15
5 Information to be given in the performance test report ... 16
Bibliography ... 17

Figure 1 – Example of humidity differences ... 8
Figure 2 – Working space ... 8
Figure 3 – Location of sensors for temperature/humidity chambers up to 2 000 l ... 10
Figure 4 – Location of minimal additional sensors for temperature/humidity chambers over 2 000 l ... 10
Figure 5 – Example of achieved humidity ... 11
Figure 6 – Example of temperature/humidity stabilization ... 12
Figure 7 – Example of humidity fluctuation ... 13
Figure 8 – Example of humidity gradient for chambers up to 2 000 l ... 14
Figure 9 – Example of humidity variation in space for chambers up to 2000 l ... 15
Figure 10 – Example of climatogram ... 16

Table 1 – Practical dimensions ... 9
Table 2 – Example of test sequence ... 15

Documents
Document Sharing Hub
Full document details: IEC 60068-3-6-2018

INTERNATIONAL ELECTROTECHNICAL COMMISSION

ENVIRONMENTAL TESTING –

Part 3-6: Supporting documentation and guidance – Confirmation of the performance of temperature/humidity chambers

FOREWORD

1) The International Electrotechnical Commission (IEC) is a worldwide organization for standardization comprising all national electrotechnical committees (IEC National Committees). The object of IEC is to promote international co-operation on all questions concerning standardization in the electrical and electronic fields. To this end and in addition to other activities, IEC publishes International Standards, Technical Specifications, Technical Reports, Publicly Available Specifications (PAS) and Guides (hereafter referred to as "IEC Publication(s)"). Their preparation is entrusted to technical committees; any IEC National Committee interested in the subject dealt with may participate in this preparatory work. International, governmental and non-governmental organizations liaising with the IEC also participate in this preparation. IEC collaborates closely with the International Organization for Standardization (ISO) in accordance with conditions determined by agreement between the two organizations.
2) The formal decisions or agreements of IEC on technical matters express, as nearly as possible, an international consensus of opinion on the relevant subjects since each technical committee has representation from all interested IEC National Committees.
3) IEC Publications have the form of recommendations for international use and are accepted by IEC National Committees in that sense. While all reasonable efforts are made to ensure that the technical content of IEC Publications is accurate, IEC cannot be held responsible for the way in which they are used or for any misinterpretation by any end user.
4) In order to promote international uniformity, IEC National Committees undertake to apply IEC Publications transparently to the maximum extent possible in their national and regional publications. Any divergence between any IEC Publication and the corresponding national or regional publication shall be clearly indicated in the latter.
5) IEC itself does not provide any attestation of conformity. Independent certification bodies provide conformity assessment services and, in some areas, access to IEC marks of conformity. IEC is not responsible for any services carried out by independent certification bodies.
6) All users should ensure that they have the latest edition of this publication.
7) No liability shall attach to IEC or its directors, employees, servants or agents including individual experts and members of its technical committees and IEC National Committees for any personal injury, property damage or other damage of any nature whatsoever, whether direct or indirect, or for costs (including legal fees) and expenses arising out of the publication, use of, or reliance upon, this IEC Publication or any other IEC Publications.
8) Attention is drawn to the Normative references cited in this publication. Use of the referenced publications is indispensable for the correct application of this publication.
9) Attention is drawn to the possibility that some of the elements of this IEC Publication may be the subject of patent rights. IEC shall not be held responsible for identifying any or all such patent rights.

International Standard IEC 60068-3-6 has been prepared by IEC technical committee 104: Environmental conditions, classification and methods of test.

This bilingual version (2019-07) corresponds to the monolingual English version, published in 2018-01.

This second edition cancels and replaces the first edition published in 2001. This edition constitutes a technical revision.

This edition includes the following significant technical changes with respect to the previous edition:

a) Confirmation procedures are clarified.

AVA Documents
Document Sharing Hub

Full document details: IEC 60068-3-6-2018

The text of this International Standard is based on the following documents:

FDIS	Report on voting
104/760/FDIS	104/779/RVD

Full information on the voting for the approval of this International Standard can be found in the report on voting indicated in the above table.

The French version of this standard has not been voted upon.

This document has been drafted in accordance with the ISO/IEC Directives, Part 2.

IEC 60068-3-6 is to be read in conjunction with IEC 60068-3-5:2001 and IEC 60068-3-7:2001.

A list of all parts in the IEC 60068 series, published under the general title *Environmental testing*, can be found on the IEC website.

The committee has decided that the contents of this document will remain unchanged until the stability date indicated on the IEC website under "http://webstore.iec.ch" in the data related to the specific document. At this date, the document will be

- reconfirmed,
- withdrawn,
- replaced by a revised edition, or
- amended.

Documents
Document Sharing Hub

Full document details: IEC 60068-3-6-2018

INTRODUCTION

IEC 60068 (all parts) contains fundamental information on environmental testing procedures and severities.

The expression "environmental conditioning" or "environmental testing" covers the natural and artificial environments to which components or equipment may be exposed so that an assessment can be made of their performance under conditions of use, transport and storage to which they may be exposed in practice.

Temperature and humidity chambers used for "environmental conditioning" or "environmental testing" are not described in any publication, although the method of maintaining and measuring temperature and/or humidity has a great influence on test results. The physical characteristics of temperature and humidity chambers can also influence test results.

Documents
Document Sharing Hub

Full document details: IEC 60068-3-6-2018

ENVIRONMENTAL TESTING –

Part 3-6: Supporting documentation and guidance – Confirmation of the performance of temperature/humidity chambers

1 Scope

This part of IEC 60068 provides a uniform and reproducible method of confirming that temperature and humidity test chambers, without specimens, conform to the requirements specified in climatic test procedures of IEC 60068-2 (all parts). This document is intended for users when conducting regular chamber performance monitoring.

2 Normative references

The following documents are referred to in the text in such a way that some or all of their content constitutes requirements of this document. For dated references, only the edition cited applies. For undated references, the latest edition of the referenced document (including any amendments) applies.

IEC 60068-3-5:2001, *Environmental testing – Part 3-5: Supporting documentation and guidance – Confirmation of the performance of temperature chambers*

IEC 60068-3-7:2001, *Environmental testing – Part 3-7: Supporting documentation and guidance – Measurements in temperature chambers for tests A and B (with load)*

IEC 60068-3-11, *Environmental testing – Part 3-11: Supporting documentation and guidance – Calculation of uncertainty of conditions in climatic test chambers*

3 Terms and definitions

For the purpose of this document, the following terms and definitions apply.

ISO and IEC maintain terminological databases for use in standardization at the following addresses:

- IEC Electropedia: available at http://www.electropedia.org/
- ISO Online browsing platform: available at http://www.iso.org/obp

NOTE 1 For terms and definitions regarding temperature testing, refer to IEC 60068-3-5.

NOTE 2 Unless otherwise specified, "humidity" is relative humidity (RH).

3.1
temperature/humidity chamber
enclosure or space in some parts of which the temperature/humidity conditions specified in IEC 60068-2 (all parts) can be achieved

Note 1 to entry: See IEC 60068-3-4.

3.2
absolute humidity
mass of water vapour present in a unit volume of moist air

Note 1 to entry: Typical units of measure are g/m3.

Documents
Document Sharing Hub

Full document details: IEC 60068-3-6-2018

3.3
dewpoint
T_d
temperature at which the saturation vapour pressure over water is equal to the partial pressure of the water vapour in the air

3.4
saturation vapour pressure
maximum possible pressure exerted by a water vapour in equilibrium with its solid or liquid phase, such that any increase will initiate within the vapour a change to a more condensed state

3.5
partial vapour pressure
contribution of water vapour in a given volume of air at a constant pressure and temperature of the atmosphere

3.6
relative humidity
RH
ratio of the partial vapour pressure, divided by the saturation vapour pressure of a given volume of air at a constant temperature, expressed as percentage

Note 1 to entry: The most popular method to express the water vapour content in air is relative humidity.

3.7
temperature/humidity stabilization
state of maintaining temperature/humidity within specified tolerance for a specified time at specified points in the working space

3.8
achieved humidity
stabilized humidity which desired humidity at the centre of the working space achieves within specified tolerance

3.9
climatogram
graphic display of combined temperature with relative humidity

Note 1 to entry: See Figure 9.

3.10
relative humidity fluctuation
difference, after stabilization, between the maximum and minimum humidity at specified points in the working space during a specified interval of time

Note 1 to entry: For calibration, the centre point of working space may be used.

3.11
relative humidity gradient
maximum difference in mean humidity value, after stabilization, at any moment in time between two separate points in the working space

Note 1 to entry: The absolute humidity of the air can be considered to be the same throughout the working space.

Note 2 to entry: See Figure 1.

3.12
relative humidity variation in space
difference in mean value, after stabilization, at any moment in time between the humidity at the centre of the working space and at any other point in the working space

Note 1 to entry: See Figure 1.

Documents
Document Sharing Hub
Full document details: IEC 60068-3-6-2018

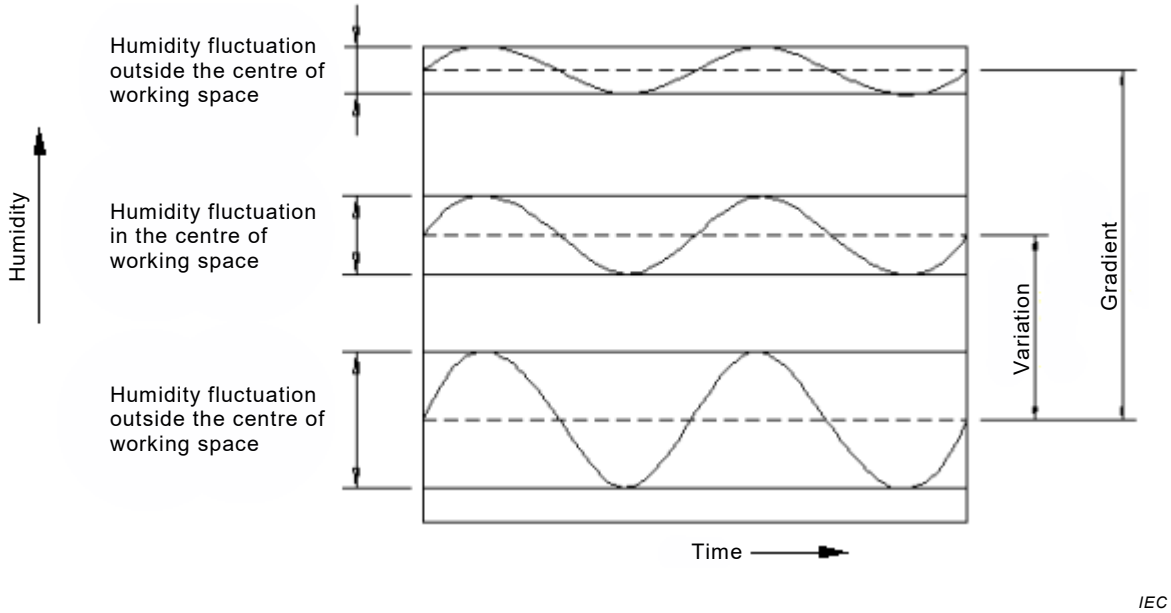

Figure 1 – Example of humidity differences

3.13
working space
part of the chamber in which the specified conditions can be maintained within the specified tolerances

Note 1 to entry: See Figure 2 and Table 1.

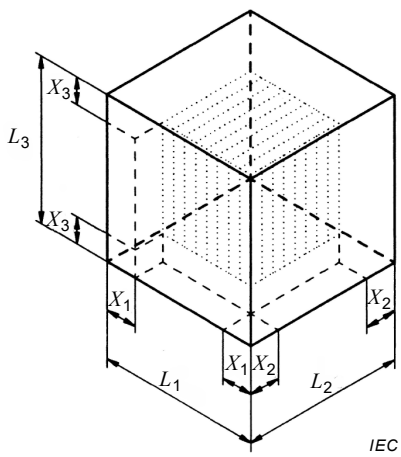

NOTE Practical dimensions of working space see Table 1.

Figure 2 – Working space

Documents
Document Sharing Hub
Full document details: IEC 60068-3-6-2018

Table 1 – Practical dimensions

Size	Volume l	Distance X mm	X (min.) mm
Small	Up to 1 000	$L/10$	50
Medium	1 000 to 2 000	$L/10$	100
Large	More than 2 000	$L/10$	150
NOTE Not all chambers are cubic in construction.			

4 Measuring of performances

4.1 Test area environment

The environment around a temperature/humidity test chamber may influence the conditions inside the test chamber.

The confirmation of performance of a temperature/humidity chamber should be carried out under standard atmospheric conditions specified in IEC 60068-1.

4.2 Measurement system

When performing an assessment of a temperature/humidity chamber, a temperature/humidity measuring system which is independent of the chamber's control system should be used.

4.3 Temperature measurement system

See IEC 60068-3-5.

4.4 Humidity measurement system

The uncertainty of measurement of the output of the measurement system should be determined by calibration of the system, traceable to international standards (see ISO 10012), and the overall measurement uncertainty should be established using ISO/IEC Guide 98-3 related to the expression of uncertainty in measurement.

Some examples of humidity measurement systems include, but are not limited to, those listed below.

a) Wet and dry bulb method

This method uses the cooling effect of water evaporation from a wet sock. The temperature of the sock is measured with a temperature sensor whilst simultaneously measuring the temperature of the air with a second temperature sensor.

b) Dewpoint mirror method

This method cools the surface of the mirror until condensation occurs on it. The temperature indicated is the dewpoint temperature.

c) Lithium chloride sensor

This method gives absolute humidity values (dewpoint temperature).

d) Capacitive sensor

Permeation of humidity changes the dielectric properties of certain materials and this is used for direct measurement of relative humidity.

Documents
Document Sharing Hub
Full document details: IEC 60068-3-6-2018

4.5 Temperature/humidity chamber test specimens

All measurements described below are performed with an empty working space. For measuring with test specimens (with or without heat dissipation), see IEC 60068-3-7.

4.6 Specified location of temperature sensors and humidity sensor in working space

4.6.1 General

Temperature measuring sensors are located in each corner and in the centre of the working space (see Figure 3, minimum 9 sensors). Humidity measuring sensor is located in the centre of the working space. For temperature/humidity chambers over 2 000 l, additional temperature sensors should be located in front of the centre of each wall (see Figure 4, minimum 15 sensors).

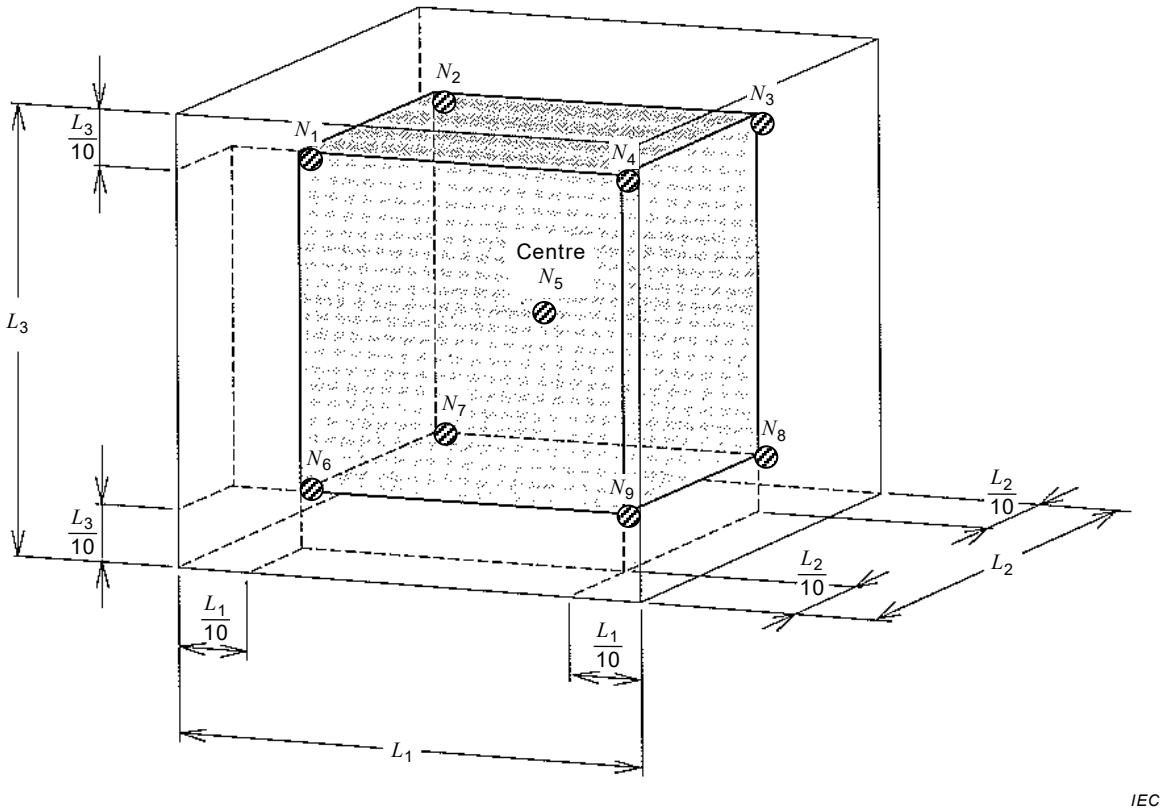

Figure 3 – Location of sensors for temperature/humidity chambers up to 2 000 l

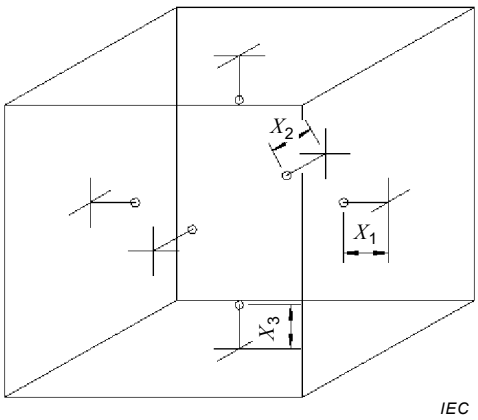

Figure 4 – Location of minimal additional sensors for temperature/humidity chambers over 2 000 l

Documents
Document Sharing Hub
Full document details: IEC 60068-3-6-2018