IEC 60071-2

Edition 5.0 2023-05
REDLINE VERSION

INTERNATIONAL STANDARD

colour inside

HORIZONTAL PUBLICATION

Insulation co-ordination –
Part 2: Application guidelines

IEC 60071-2:2023-05 RLV(en)

Documents
Document Sharing Hub

Full document details: IEC 60071-2 2023 RLV

THIS PUBLICATION IS COPYRIGHT PROTECTED
Copyright © 2023 IEC, Geneva, Switzerland

All rights reserved. Unless otherwise specified, no part of this publication may be reproduced or utilized in any form or by any means, electronic or mechanical, including photocopying and microfilm, without permission in writing from either IEC or IEC's member National Committee in the country of the requester. If you have any questions about IEC copyright or have an enquiry about obtaining additional rights to this publication, please contact the address below or your local IEC member National Committee for further information.

IEC Secretariat
3, rue de Varembé
CH-1211 Geneva 20
Switzerland

Tel.: +41 22 919 02 11
info@iec.ch
www.iec.ch

About the IEC
The International Electrotechnical Commission (IEC) is the leading global organization that prepares and publishes International Standards for all electrical, electronic and related technologies.

About IEC publications
The technical content of IEC publications is kept under constant review by the IEC. Please make sure that you have the latest edition, a corrigendum or an amendment might have been published.

IEC publications search - webstore.iec.ch/advsearchform
The advanced search enables to find IEC publications by a variety of criteria (reference number, text, technical committee, …). It also gives information on projects, replaced and withdrawn publications.

IEC Just Published - webstore.iec.ch/justpublished
Stay up to date on all new IEC publications. Just Published details all new publications released. Available online and once a month by email.

IEC Customer Service Centre - webstore.iec.ch/csc
If you wish to give us your feedback on this publication or need further assistance, please contact the Customer Service Centre: sales@iec.ch.

IEC Products & Services Portal - products.iec.ch
Discover our powerful search engine and read freely all the publications previews. With a subscription you will always have access to up to date content tailored to your needs.

Electropedia - www.electropedia.org
The world's leading online dictionary on electrotechnology, containing more than 22 300 terminological entries in English and French, with equivalent terms in 19 additional languages. Also known as the International Electrotechnical Vocabulary (IEV) online.

Documents
Document Sharing Hub

Full document details: IEC 60071-2 2023 RLV

IEC 60071-2

Edition 5.0 2023-05
REDLINE VERSION

INTERNATIONAL STANDARD

colour inside

HORIZONTAL PUBLICATION

Insulation co-ordination – Part 2: Application guidelines

INTERNATIONAL
ELECTROTECHNICAL
COMMISSION

ICS 29.080.30

ISBN 978-2-8322-7074-5

Warning! Make sure that you obtained this publication from an authorized distributor.

® Registered trademark of the International Electrotechnical Commission

Documents
Document Sharing Hub

Full document details: IEC 60071-2 2023 RLV

CONTENTS

FOREWORD 9
1 Scope 11
2 Normative references 11
3 Terms, definitions, abbreviated terms and symbols 12
3.1 Terms and definitions 12
3.2 Abbreviated terms 12
3.3 Symbols 12
4 Concepts governing the insulation co-ordination 18
5 Representative voltage stresses in service 19
5.1 Origin and classification of voltage stresses 19
5.2 Characteristics of overvoltage protection devices 20
5.2.1 General remarks 20
5.2.2 Metal-oxide surge arresters without gaps (MOSA) 20
5.2.3 Line surge arresters (LSA) for overhead transmission and distribution lines 22
5.3 General approach for the determination of representative voltages and overvoltages 23
5.3.1 Continuous (power-frequency) voltage 23
5.3.2 Temporary overvoltages 23
5.3.3 Slow-front overvoltages 26
5.3.4 Fast-front overvoltages 32
5.3.5 Very-fast-front overvoltages 36
5.4 Determination of representative overvoltages by detailed simulations 37
5.4.1 General overview 37
5.4.2 Temporary overvoltages 37
5.4.3 Slow-front overvoltages 38
5.4.4 Fast-front overvoltages 39
5.4.5 Very-fast-front overvoltages 43
6 Co-ordination withstand voltage 44
6.1 Insulation strength characteristics 44
6.1.1 General 44
6.1.2 Influence of polarity and overvoltage shapes 46
6.1.3 Phase-to-phase and longitudinal insulation 47
6.1.4 Influence of weather conditions on external insulation 47
6.1.5 Probability of disruptive discharge of insulation 47
6.2 Performance criterion 49
6.3 Insulation co-ordination procedures 49
6.3.1 General 49
6.3.2 Insulation co-ordination procedures for continuous (power-frequency) voltage and temporary overvoltage 50
6.3.3 Insulation co-ordination procedures for slow-front overvoltages 51
6.3.4 Insulation co-ordination procedures for fast-front overvoltages 56
6.3.5 Insulation co-ordination procedures for very-fast-front overvoltages 57
7 Required withstand voltage 57
7.1 General remarks 57
7.2 Atmospheric correction 57
7.2.1 General remarks 57

AVA Documents
Document Sharing Hub
Full document details: IEC 60071-2 2023 RLV

7.2.2 Altitude correction ... 58
7.3 Safety factors ... 59
7.3.1 General ... 59
7.3.2 Ageing ... 60
7.3.3 Production and assembly dispersion ... 60
7.3.4 Inaccuracy of the withstand voltage ... 60
7.3.5 Recommended safety factors (K_S) ... 60
8 Standard withstand voltage and testing procedures ... 61
8.1 General remarks ... 61
8.1.1 Overview ... 61
8.1.2 Standard switching impulse withstand voltage ... 61
8.1.3 Standard lightning impulse withstand voltage ... 61
8.2 Test conversion factors ... 62
8.2.1 Range I ... 62
8.2.2 Range II ... 62
8.3 Determination of insulation withstand by type tests ... 63
8.3.1 Test procedure dependency upon insulation type ... 63
8.3.2 Non-self-restoring insulation ... 63
8.3.3 Self-restoring insulation ... 63
8.3.4 Mixed insulation ... 64
8.3.5 Limitations of the test procedures ... 65
8.3.6 Selection of the type test procedures ... 65
8.3.7 Selection of the type test voltages ... 65
9 Special considerations for ~~overhead lines~~ apparatus and transmission line ... 66
9.1 Overhead line ... 66
9.1.1 General ~~remarks~~ ... 66
9.1.2 Insulation co-ordination for operating voltages and temporary overvoltages ... 67
9.1.3 Insulation co-ordination for slow-front overvoltages ... 67
9.1.4 Insulation co-ordination for ~~lightning~~ fast-front overvoltages ... 68
9.2 Cable line ... 69
9.2.1 General ... 69
9.2.2 Insulation co-ordination for operating voltages and temporary overvoltages ... 69
9.2.3 Insulation co-ordination for slow-front overvoltages ... 69
9.2.4 Insulation co-ordination for fast-front overvoltages ... 70
9.2.5 Overvoltage protection of cable lines ... 70
9.3 GIL (gas insulated transmission line) / GIB (Gas-insulated busduct) ... 71
9.3.1 General ... 71
9.3.2 Insulation co-ordination for operating voltages and temporary overvoltages ... 71
9.3.3 Insulation co-ordination for slow-front overvoltages ... 71
9.3.4 Insulation co-ordination for fast-front overvoltages ... 72
9.3.5 Overvoltage protection of GIL/GIB lines ... 72
9.4 ~~Special considerations for substations~~ Substation ... 68
9.4.1 General ~~remarks~~ ... 72
9.4.2 Insulation co-ordination for overvoltages ... 73
Annex A (informative) Determination of temporary overvoltages due to earth faults ... 76
Annex B (informative) Weibull probability distributions ... 81

AVA Documents
Document Sharing Hub
Full document details: IEC 60071-2 2023 RLV

B.1 General remarks 80
B.2 Disruptive discharge probability of external insulation 81
B.3 Cumulative frequency distribution of overvoltages 84
Annex C (informative) Determination of the representative slow-front overvoltage due to line energization and re-energization 86
C.1 General remarks 86
C.2 Probability distribution of the representative amplitude of the prospective overvoltage phase-to-earth 86
C.3 Probability distribution of the representative amplitude of the prospective overvoltage phase-to-phase 89
C.4 Insulation characteristic 91
C.5 Numerical example 93
Annex D (informative) Transferred overvoltages in transformers 100
D.1 General remarks 100
D.2 Transferred temporary overvoltages 101
D.3 Capacitively transferred surges 101
D.4 Inductively transferred surges 103
Annex E (informative) Determination of lightning overvoltages by simplified method 107
E.1 General remarks 107
E.2 Determination of the limit distance (X_p) 107
E.2.1 Protection with arresters in the substation 107
E.2.2 Self-protection of substation 108
E.3 Estimation of the representative lightning overvoltage amplitude 109
E.3.1 General 109
E.3.2 Shielding penetration 109
E.3.3 Back flashovers 110
E.4 Simplified ~~method~~ approach 112
E.5 Assumed maximum value of the representative lightning overvoltage 114
Annex F (informative) Calculation of air gap breakdown strength from experimental data 116
F.1 General 116
F.2 Insulation response to power-frequency voltages 116
F.3 Insulation response to slow-front overvoltages 117
F.4 Insulation response to fast-front overvoltages 118
Annex G (informative) Examples of insulation co-ordination procedure 122
G.1 Overview 122
G.2 Numerical example for a system in range I (with nominal voltage of 230 kV) 122
G.2.1 General 122
G.2.2 Part 1: no special operating conditions 123
G.2.3 Part 2: influence of capacitor switching at station 2 130
G.2.4 Part 3: flow charts related to the example of Clause G.2 132
G.3 Numerical example for a system in range II (with nominal voltage of 735 kV) 137
G.3.1 General 137
G.3.2 Step 1: determination of the representative overvoltages – values of U_{rp} 137
G.3.3 Step 2: determination of the co-ordination withstand voltages – values of U_{cw} 138
G.3.4 Step 3: determination of the required withstand voltages – values of U_{rw} 139

AVA Documents
Document Sharing Hub
Full document details: IEC 60071-2 2023 RLV

G.3.5 Step 4: conversion to switching impulse withstand voltages (SIWV) 140
G.3.6 Step 5: selection of standard insulation levels 141
G.3.7 Considerations relative to phase-to-phase insulation co-ordination 141
G.3.8 Phase-to-earth clearances 142
G.3.9 Phase-to-phase clearances 143
G.4 Numerical example for substations in distribution systems with U_m up to 36 kV in range I 143
G.4.1 General 143
G.4.2 Step 1: determination of the representative overvoltages – values of U_{rp} 144
G.4.3 Step 2: determination of the co-ordination withstand voltages – values of U_{cw} 144
G.4.4 Step 3: determination of required withstand voltages – values of U_{rw} 145
G.4.5 Step 4: conversion to standard short-duration power-frequency and lightning impulse withstand voltages 146
G.4.6 Step 5: selection of standard withstand voltages 147
G.4.7 Summary of insulation co-ordination procedure for the example of Clause G.4 147
Annex H (informative) Atmospheric correction – Altitude correction application example 149
H.1 General principles 149
H.1.1 Atmospheric correction in standard tests 149
H.1.2 Task of atmospheric correction in insulation co-ordination 150
H.2 Atmospheric correction in insulation co-ordination 152
H.2.1 Factors for atmospheric correction 152
H.2.2 General characteristics for moderate climates 152
H.2.3 Special atmospheric conditions 153
H.2.4 Altitude dependency of air pressure 154
H.3 Altitude correction 155
H.3.1 Definition of the altitude correction factor 155
H.3.2 Principle of altitude correction 156
H.3.3 Altitude correction for standard equipment operating at altitudes up to 1 000 m 157
H.3.4 Altitude correction for standard equipment operating at altitudes above 1 000 m 157
H.4 Selection of the exponent m 158
H.4.1 General 158
H.4.2 Derivation of exponent m for switching impulse voltage 158
H.4.3 Derivation of exponent m for critical switching impulse voltage 161
Annex I (informative) Evaluation method of non-standard lightning overvoltage shape for representative voltages and overvoltages 164
I.1 General remarks 164
I.2 Lightning overvoltage shape 164
I.3 Evaluation method for GIS 164
I.3.1 Experiments 164
I.3.2 Evaluation of overvoltage shape 165
I.4 Evaluation method for transformer 165
I.4.1 Experiments 165
I.4.2 Evaluation of overvoltage shape 166

AVA Documents
Document Sharing Hub
Full document details: IEC 60071-2 2023 RLV

Annex J (informative) Insulation co-ordination for very-fast-front overvoltages in UHV substations ... 171
J.1 General ... 171
J.2 Influence of disconnector design ... 171
J.3 Insulation co-ordination for VFFO ... 172
Annex K (informative) Application of shunt reactors to limit TOV and SFO of high voltage overhead transmission line ... 174
K.1 General remarks ... 174
K.2 Limitation of TOV and SFO ... 174
K.3 Application of the neutral grounding reactor to limit resonance overvoltage and secondary arc current ... 174
K.4 SFO and Beat frequency overvoltage limited by neutral arrester ... 175
K.5 SFO and FFO due to SR de-energization ... 176
K.6 Limitation of TOV by Controllable SR ... 176
K.7 Insulation coordination of the SR and neutral grounding reactor ... 176
K.8 Self-excitation TOV of synchronous generator ... 176
Annex L (informative) Calculation of lightning stroke rate and lightning outage rate ... 177
L.1 General ... 177
L.2 Description in CIGRE [37] ... 177
L.3 Flash program in IEEE [49] ... 178
L.4 [Case Study] Calculation of Lightning Stroke Rate and Lightning Outage Rate (Appendix D in CIGRE TB 839 [37]) ... 178
L.4.1 Basic flow of calculation method ... 178
L.4.2 Comparison of Calculation Results with Observations ... 181
Bibliography ... 183

Figure 1 – Range of 2 % slow-front overvoltages at the receiving end due to line energization and re-energization [27] ... 28
Figure 2 – Ratio between the 2 % values of slow-front overvoltages phase-to-phase and phase-to-earth [28], [29] ... 29
Figure 3 – Diagram for surge arrester connection to the protected object ... 36
Figure 4 – Modelling of transmission lines and substations/power stations ... 42
Figure 5 – Distributive discharge probability of self-restoring insulation described on a linear scale ... 52
Figure 6 – Disruptive discharge probability of self-restoring insulation described on a Gaussian scale ... 52
Figure 7 – Evaluation of deterministic co-ordination factor K_{cd} ... 53
Figure 8 – Evaluation of the risk of failure ... 54
Figure 9 – Risk of failure of external insulation for slow-front overvoltages as a function of the statistical co-ordination factor K_{cs} ... 56
Figure 10 – Dependence of exponent m on the co-ordination switching impulse withstand voltage ... 59
Figure 11 – Probability P of an equipment to pass the test dependent on the difference K between the actual and the rated impulse withstand voltage ... 65
Figure 12 – Example of a schematic substation layout used for the overvoltage stress location ... 72
Figure A.1 – Earth fault factor k on a base of X_0/X_1 for $R_1/X_1 = R_f = 0$ ... 77

Documents
Document Sharing Hub
Full document details: IEC 60071-2 2023 RLV

Figure A.2 – Relationship between R_0/X_1 and X_0/X_1 for constant values of earth fault factor k where R_1 = 0 78

Figure A.3 – Relationship between R_0/X_1 and X_0/X_1 for constant values of earth fault factor k where R_1 = 0,5 X_1 78

Figure A.4 – Relationship between R_0/X_1 and X_0/X_1 for constant values of earth fault factor k where R_1 = X_1 79

Figure A.5 – Relationship between R_0/X_1 and X_0/X_1 for constant values of earth fault factor k where R_1 = 2X_1 79

Figure B.1 – Conversion chart for the reduction of the withstand voltage due to placing insulation configurations in parallel 85

Figure C.1 – Probability density and cumulative distribution for derivation of the representative overvoltage phase-to-earth 87

Figure C.2 – Example for bivariate phase-to-phase overvoltage curves with constant probability density and tangents giving the relevant 2 % values 95

Figure C.3 – Principle of the determination of the representative phase-to-phase overvoltage U_{pre} 97

Figure C.4 – Schematic phase-phase-earth insulation configuration 98

Figure C.5 – Description of the 50 % switching impulse flashover voltage of a phase-phase-earth insulation 98

Figure C.6 – Inclination angle of the phase-to-phase insulation characteristic in range "b" dependent on the ratio of the phase-phase clearance D to the height H_t above earth 99

Figure D.1 – Distributed capacitances of the windings of a transformer and the equivalent circuit describing the windings 105

Figure D.2 – Values of factor J describing the effect of the winding connections on the inductive surge transference 106

Figure H.1 – Principle of the atmospheric correction during test of a specified insulation level according to the procedure of IEC 60060-1 150

Figure H.2 – Principal task of the atmospheric correction in insulation co-ordination according to IEC 60071-1 151

Figure H.3 – Comparison of atmospheric correction $\delta \times k_h$ with relative air pressure p/p_0 for various weather stations around the world 154

Figure H.4 – Deviation of simplified pressure calculation by exponential function in this document from the temperature dependent pressure calculation of ISO 2533 155

Figure H.5 – Principle of altitude correction: decreasing withstand voltage U_{10} of equipment with increasing altitude 156

Figure H.6 – Sets of m-curves for standard switching impulse voltage including the variations in altitude for each gap factor 161

Figure H.7 – Exponent m for standard switching impulse voltage for selected gap factors covering altitudes up to 4 000 m 161

Figure H.8 – Sets of m-curves for critical switching impulse voltage including the variations in altitude for each gap factor 162

Figure H.9 – Exponent m for critical switching impulse voltage for selected gap factors covering altitudes up to 4 000 m 162

Figure H.10 – Accordance of m-curves from Figure 10 with determination of exponent m by means of critical switching impulse voltage for selected gap factors and altitudes 163

Figure I.1 – Examples of lightning overvoltage shapes 166

AVA Documents
Document Sharing Hub

Full document details: IEC 60071-2 2023 RLV

Figure I.2 – Example of insulation characteristics with respect to lightning overvoltages of the SF_6 gas gap (Shape E) 167
Figure I.3 – Calculation of duration time T_d 167
Figure I.4 – Shape evaluation flow for GIS and transformer 168
Figure I.5 – Application to GIS lightning overvoltage 169
Figure I.6 – Example of insulation characteristics with respect to lightning overvoltage of the turn-to-turn insulation (Shape C) 169
Figure I.7 – Application to transformer lightning overvoltage 170
Figure J.1 – Insulation co-ordination for very-fast-front overvoltages 173
Figure L.1 – Outline of the CIGRE method for lightning performance of an overhead line 178
Figure L.2 – Flowchart to calculate lightning outage rate of transmission lines 180
Figure L.3 – Typical conductor arrangements of large-scale transmission lines 181
Figure L.4 – Lightning stroke rate to power lines -calculations and observations- 181
Figure L.5 – Lightning outage rate -calculations and observations- 182

Table 1 – Test conversion factors for range I, to convert required SIWV to SDWV and LIWV 62
Table 2 – Test conversion factors for range II to convert required SDWV to SIWV 63
Table 3 – Selectivity of test procedures B and C of IEC 60060-1 64
Table B.1 – Breakdown voltage versus cumulative flashover probability – Single insulation and 100 parallel insulations 83
Table E.1 – Corona damping constant K_{co} 108
Table E.2 – Factor A for various overhead lines 114
Table F.1 – Typical gap factors K for switching impulse breakdown phase-to-earth (according to [1] and [4]) 120
Table F.2 – Gap factors for typical phase-to-phase geometries 121
Table G.1 – Summary of minimum required withstand voltages obtained for the example shown in G.2.2 129
Table G.2 – Summary of required withstand voltages obtained for the example shown in G.2.3 131
Table G.3 – Values related to the insulation co-ordination procedure for the example in G.4 148
Table H.1 – Comparison of functional expressions of Figure 10 with the selected parameters from the derivation of m-curves with critical switching impulse 163
Table I.1 – Evaluation of the lightning overvoltage in the GIS of UHV system 167
Table I.2 – Evaluation of lightning overvoltage in the transformer of 500 kV system 170

Documents
Document Sharing Hub
Full document details: IEC 60071-2 2023 RLV

INTERNATIONAL ELECTROTECHNICAL COMMISSION

INSULATION CO-ORDINATION –

Part 2: Application guidelines

FOREWORD

1) The International Electrotechnical Commission (IEC) is a worldwide organization for standardization comprising all national electrotechnical committees (IEC National Committees). The object of IEC is to promote international co-operation on all questions concerning standardization in the electrical and electronic fields. To this end and in addition to other activities, IEC publishes International Standards, Technical Specifications, Technical Reports, Publicly Available Specifications (PAS) and Guides (hereafter referred to as "IEC Publication(s)"). Their preparation is entrusted to technical committees; any IEC National Committee interested in the subject dealt with may participate in this preparatory work. International, governmental and non-governmental organizations liaising with the IEC also participate in this preparation. IEC collaborates closely with the International Organization for Standardization (ISO) in accordance with conditions determined by agreement between the two organizations.
2) The formal decisions or agreements of IEC on technical matters express, as nearly as possible, an international consensus of opinion on the relevant subjects since each technical committee has representation from all interested IEC National Committees.
3) IEC Publications have the form of recommendations for international use and are accepted by IEC National Committees in that sense. While all reasonable efforts are made to ensure that the technical content of IEC Publications is accurate, IEC cannot be held responsible for the way in which they are used or for any misinterpretation by any end user.
4) In order to promote international uniformity, IEC National Committees undertake to apply IEC Publications transparently to the maximum extent possible in their national and regional publications. Any divergence between any IEC Publication and the corresponding national or regional publication shall be clearly indicated in the latter.
5) IEC itself does not provide any attestation of conformity. Independent certification bodies provide conformity assessment services and, in some areas, access to IEC marks of conformity. IEC is not responsible for any services carried out by independent certification bodies.
6) All users should ensure that they have the latest edition of this publication.
7) No liability shall attach to IEC or its directors, employees, servants or agents including individual experts and members of its technical committees and IEC National Committees for any personal injury, property damage or other damage of any nature whatsoever, whether direct or indirect, or for costs (including legal fees) and expenses arising out of the publication, use of, or reliance upon, this IEC Publication or any other IEC Publications.
8) Attention is drawn to the Normative references cited in this publication. Use of the referenced publications is indispensable for the correct application of this publication.
9) Attention is drawn to the possibility that some of the elements of this IEC Publication may be the subject of patent rights. IEC shall not be held responsible for identifying any or all such patent rights.

This redline version of the official IEC Standard allows the user to identify the changes made to the previous edition IEC 60071-2:2018. A vertical bar appears in the margin wherever a change has been made. Additions are in green text, deletions are in strikethrough red text.

Documents
Document Sharing Hub

Full document details: IEC 60071-2 2023 RLV

IEC 60071-2 has been prepared by IEC technical committee 99: Insulation co-ordination and system engineering of high voltage electrical power installations above 1,0 kV AC and 1,5 kV DC. It is an International Standard.

This fifth edition cancels and replaces the fourth edition published in 2018. This edition constitutes a technical revision.

This edition includes the following significant technical changes with respect to the previous edition:

a) Clause 4 Concepts governing the insulation co-ordination has been added.
b) Subclause 5.3 has been revised, and Subclause 5.4 Detailed simulation has been added because it is widely applied in the recent practices of insulation coordination.
c) Special considerations for cable line and GIL/GIB have been added in Clause 9.
d) Annex K (informative) Application of line shunt reactor to limitation of TOV and SFO in high voltage overhead transmission lines has been added.
e) Annex L (informative) Calculation of lightning stroke rate and lightning outage rate has been added.

The text of this International Standard is based on the following documents:

Draft	Report on voting
99/356/CDV	99/392/RVC

Full information on the voting for its approval can be found in the report on voting indicated in the above table.

The language used for the development of this International Standard is English.

This document was drafted in accordance with ISO/IEC Directives, Part 2, and developed in accordance with ISO/IEC Directives, Part 1 and ISO/IEC Directives, IEC Supplement, available at www.iec.ch/members_experts/refdocs. The main document types developed by IEC are described in greater detail at www.iec.ch/publications.

A list of all parts in the IEC 60071 series, published under the general title *Insulation co-ordination*, can be found on the IEC website.

The committee has decided that the contents of this document will remain unchanged until the stability date indicated on the IEC website under webstore.iec.ch in the data related to the specific document. At this date, the document will be

- reconfirmed,
- withdrawn,
- replaced by a revised edition, or
- amended.

IMPORTANT – The "colour inside" logo on the cover page of this document indicates that it contains colours which are considered to be useful for the correct understanding of its contents. Users should therefore print this document using a colour printer.

Documents
Document Sharing Hub

Full document details: IEC 60071-2 2023 RLV

INSULATION CO-ORDINATION –

Part 2: Application guidelines

1 Scope

This part of IEC 60071 constitutes application guidelines and deals with the selection of insulation levels of equipment or installations for three-phase ~~electrical~~ AC systems. Its aim is to give guidance for the determination of the rated withstand voltages for ranges I and II of IEC 60071-1 and to justify the association of these rated values with the standardized highest voltages for equipment.

This association is for insulation co-ordination purposes only. The requirements for human safety are not covered by this document.

This document covers three-phase AC systems with nominal voltages above 1 kV. The values derived or proposed herein are generally applicable only to such systems. However, the concepts presented are also valid for two-phase or single-phase systems.

This document covers phase-to-earth, phase-to-phase and longitudinal insulation.

This document is not intended to deal with routine tests. These are to be specified by the relevant product committees.

The content of this document strictly follows the flow chart of the insulation co-ordination process presented in Figure 1 of IEC 60071-1:~~2006~~2019. Clauses 5 to 8 correspond to the squares in this flow chart and give detailed information on the concepts governing the insulation co-ordination process which leads to the establishment of the required withstand levels.

This document emphasizes ~~the necessity of considering~~ to consider, at the very beginning, all origins, all classes and all types of voltage stresses in service irrespective of the range of highest voltage for equipment. Only at the end of the process, when the selection of the standard withstand voltages takes place, does the principle of covering a particular service voltage stress by a standard withstand voltage apply. Also, at this final step, this document refers to the correlation made in IEC 60071-1 between the standard insulation levels and the highest voltage for equipment.

The annexes contain examples and detailed information which explain or support the concepts described in the main text, and the basic analytical techniques used.

It has the status of a horizontal standard in accordance with IEC Guide 108.

2 Normative references

The following documents are referred to in the text in such a way that some or all of their content constitutes requirements of this document. For dated references, only the edition cited applies. For undated references, the latest edition of the referenced document (including any amendments) applies.

IEC 60060-1:2010, *High-voltage test techniques – Part 1: General definitions and test requirements*

Documents
Document Sharing Hub

Full document details: IEC 60071-2 2023 RLV

IEC 60071-1:~~2006~~2019, *Insulation co-ordination – Part 1: Definitions, principles and rules* ~~IEC 60071-1:2006/AMD1:2010~~

IEC 60505:2011, *Evaluation and qualification of electrical insulation systems*

IEC TS 60815-1:2008, *Selection and dimensioning of high-voltage insulators intended for use in polluted conditions – Part 1: Definitions, information and general principles*

~~ISO 2533:1975, *Standard Atmosphere*~~

IEC TR 60071-4:2004, *Insulation co-ordination – Part 4: Computational guide to insulation co-ordination and modelling of electrical networks*

3 Terms, definitions, abbreviated terms and symbols

3.1 Terms and definitions

~~No terms and definitions are listed in this document.~~

For the purposes of this document, the following terms and definitions apply.

ISO and IEC maintain terminology databases for use in standardization at the following addresses:

- IEC Electropedia: available at https://www.electropedia.org/
- ISO Online browsing platform: available at https://www.iso.org/obp

3.1.1
insulation co-ordination
selection of the dielectric strength of equipment in relation to the operating voltages and overvoltages which can appear on the system for which the equipment is intended and taking into account the service environment and the characteristics of the available preventing and protective devices

Note 1 to entry: By "dielectric strength" of the equipment, is meant here its rated or its standard insulation level as defined in 3.36 and 3.37 of 60071-1:2019 respectively.

[IEC 60071-1:2019, 3.1]

3.1.2
earth fault factor
at a given location of a three-phase system, and for a given system configuration, the ratio of the highest RMS phase-to-earth power-frequency voltage on a healthy phase during a fault to earth affecting one or more phases at any point on the system to the RMS phase-to-earth power-frequency voltage which would be obtained at the given location in the absence of any such fault

[SOURCE: IEC 60071-1:2019, 3.15]

3.2 Abbreviated terms

AIS	air-insulated substation
EGLA	externally gapped line arrester
EHV	extra high voltage: the highest voltage for equipment above 245 kV and up to and including 800 kV
EMT	electro-magnetic transients
ESDD	equivalent salt deposit density

AVA Documents Document Sharing Hub

Full document details: IEC 60071-2 2023 RLV

FFO	fast-front overvoltage
GIS	gas-insulated switchgear, gas-insulated substation
LIPL	lightning impulse protection level
LIWV	lightning impulse withstand voltage
LSA	line surge arrester
MOSA	metal-oxide surge arrester
MTBF	mean time between failure
NGLA	non-gapped line arrester
SDWV	short-duration power-frequency withstand voltage
SFO	slow-front overvoltage
SIPL	switching impulse protection level
SIWV	switching impulse withstand voltage
SVU	series varistor unit
TCV	trapped charge voltage
TOV	temporary ~~power-frequency~~ overvoltages
UHV	ultra high voltage: the highest voltage for equipment above 800 kV
VFFO	very-fast-front overvoltage

3.3 Symbols

For the purposes of this document, the following symbols and definitions apply. The symbol is followed by the unit to be normally considered, dimensionless quantities being indicated by (-).

Some quantities are expressed in p.u. A per unit quantity is the ratio of the actual value of an electrical parameter (voltage, current, frequency, power, impedance, etc.) to a given reference value of the same parameter.

A	(kV)	parameter characterizing the influence of the lightning severity for the equipment depending on the type of overhead line connected to it
a_1	(m)	length of the lead connecting the surge arrester to the line
a_2	(m)	length of the lead connecting the surge arrester to earth
a_3	(m)	length of the phase conductor between the surge arrester and the protected equipment
a_4	(m)	length of the active part of the surge arrester
B	(-)	factor used when describing the phase-to-phase discharge characteristic
C_e	(nF)	capacitance to earth of transformer primary windings
C_s	(nF)	series capacitance of transformer primary windings
C_2	(nF)	phase-to-earth capacitance of the transformer secondary winding
C_{12}	(nF)	capacitance between primary and secondary windings of transformers
C_{1in}	(nF)	equivalent input capacitance of the terminal 1 of three-phase transformers
C_{2in}	(nF)	equivalent input capacitance of the terminal 2 of three-phase transformers
C_{3in}	(nF)	equivalent input capacitance of the terminal 3 of three-phase transformers

Documents
Document Sharing Hub
Full document details: IEC 60071-2 2023 RLV

c	(m/μs)	velocity of light
c_f	(p.u.)	coupling factor of voltages between earth wire and phase conductor of overhead lines
d	(m)	air gap length
d_r	(-)	dividing ratio of capacitively transferred surges
E_0	(kV/m)	soil ionization gradient
F		function describing the cumulative distribution of overvoltage amplitudes, where $F(U) = 1 - P(U)$; see Clause B.3
$F_{c\text{-}p}$		function describing the cumulative distribution of overvoltage amplitudes, in case-peak method
f		function describing the probability density of overvoltage amplitudes
H	(m)	altitude above sea-level
h	(-)	power-frequency voltage factor for transferred surges in transformers
H_t	(m)	height above ~~ground~~ earth
I	(kA)	lightning current amplitude
I_g	(kA)	limit lightning current in tower footing resistance calculation
I_n	(kA)	nominal discharge current of an arrester
J	(-)	winding factor for inductively transferred surges in transformers
K	(-)	gap factor taking into account the influence of the gap configuration on the strength
K_a	(-)	altitude correction factor
K_c	(-)	co-ordination factor
K_s	(-)	safety factor
K_{cd}	(-)	deterministic co-ordination factor
K_{cmp}	(-)	compensation factor, the ratio of reactive power of SR to reactive power of line positive sequence capacitance
K_{co}	(μs/(kVm))	corona damping constant
K_{cs}	(-)	statistical co-ordination factor
K_{f^+f}	(-)	gap factor for fast-front impulses of positive polarity
K_{f^-f}	(-)	gap factor for fast-front impulses of negative polarity
K_{ev}	(-)	evaluation factor of ratio for lightning overvoltage with respect to standard voltage shape
k	(-)	earth fault factor
k_h	(-)	parameter for humidity correction
~~d~~	~~(m)~~	~~separation distance between surge arrester and protected equipment~~
L_a	(m)	overhead line length yielding to an outage rate equal to the acceptable one (related to R_a)
L_t	(m)	overhead line length for which the lightning outage rate is equal to the adopted return rate (probability of occurrence, related to R_t)
L_{sp}	(m)	span length
M	(-)	number of insulations in parallel considered to be simultaneously stressed by an overvoltage

Documents
Document Sharing Hub
Full document details: IEC 60071-2 2023 RLV

m	(-)	exponent in the atmospheric correction factor formula for external insulation withstand
N	(-)	number of conventional deviations between U_{50} and U_{spec} of a self-restoring insulation
n	(-)	number of overhead lines considered connected to a station in the evaluation of the impinging surge amplitude
P	(%)	probability of discharge of a self-restoring insulation
P_w	(%)	probability of withstand of self-restoring insulation
q	(-)	response factor of transformer windings for inductively transferred surges
Q_{rs}	(C)	repetitive charge transfer rating of an arrester
Q_{th}	(C)	thermal charge transfer rating of an arrester
R	(-)	risk of failure (failures per event)
R_a	(1/a)	acceptable failure rate for apparatus; for transmission lines, this parameter is normally expressed in terms of (1/a)/100 km
R_{cs}	(-)	the most critical overvoltage stress
R_f	(Ω)	fault resistance
R_{hc}	(Ω)	high current value of the tower footing resistance
R_{km}	(1/(m.a))	overhead line outage rate per year for a design corresponding to the first kilometre in front of the station
R_{lc}	(Ω)	low current value of the tower footing resistance
R_p	(1/a)	shielding penetration rate of overhead lines
R_{sf}	(1/a)	shielding failure flashover rate of overhead lines
R_t	(1/a)	adopted overvoltage return rate (reference value)
R_u	(kV)	radius of a circle in the U^+/U^- plane describing the phase-phase-earth slow-front overvoltages
R_0	(Ω)	zero sequence resistance
R_1	(Ω)	positive sequence resistance
R_2	(Ω)	negative sequence resistance
S	(kV/µs)	steepness of a lightning surge impinging on a substation
S_e	(kV)	conventional deviation of phase-to-earth overvoltage distribution
S_p	(kV)	conventional deviation of phase-to-phase overvoltage distribution
S_{rp}	(kV/µs)	representative steepness of a lightning impinging surge
s_e	(-)	normalized value of the conventional deviation S_e (S_e referred to U_{e50})
s_p	(-)	normalized value of the conventional deviation S_p (S_p referred to U_{p50})
t_s	(µs)	travel time of a lightning surge
U	(kV)	amplitude of an overvoltage (or of a voltage)
U^+	(kV)	positive switching impulse component in a phase-to-phase insulation test
U^-	(kV)	negative switching impulse component in a phase-to-phase insulation test

Documents
Document Sharing Hub
Full document details: IEC 60071-2 2023 RLV

U_{spec}	(kV)	truncation value of the discharge probability function $P(U)$ of a self-restoring insulation: $P\ (U \leq U_{spec}) = 0$
U_0^+	(kV)	equivalent positive phase-to-earth component used to represent the most critical phase-to-phase overvoltage
U_{1e}	(kV)	temporary overvoltage to earth at the neutral of the primary winding of a transformer
U_{2e}	(kV)	temporary overvoltage to earth at the neutral of the secondary winding of a transformer
U_{2N}	(kV)	rated voltage of the secondary winding of a transformer
U_{10}	(kV)	value of the 10 % discharge voltage of self-restoring insulation; this value is the statistical withstand voltage of the insulation defined in 3.23 b) of IEC 60071-1:~~2006~~2019
U_{16}	(kV)	value of the 16 % discharge voltage of self-restoring insulation
U_{50}	(kV)	value of the 50 % discharge voltage of self-restoring insulation
U_{50M}	(kV)	value of the 50 % discharge voltage of M parallel self-restoring insulations
U_{50RP}	(kV)	value of the 50 % discharge voltage of a rod-plane gap
U_c	(kV)	continuous operating voltage of an arrester
U_c^+	(kV)	positive component defining the centre of a circle which describes the phase-phase-earth slow-front overvoltages
U_c^-	(kV)	negative component defining the centre of a circle which describes the phase-phase-earth slow-front overvoltages
U_{cw}	(kV)	co-ordination withstand voltage of equipment.
U_e	(kV)	amplitude of a phase-to-earth overvoltage
U_{et}	(kV)	truncation value of the cumulative distribution $F\ (U_e)$ of the phase-to-earth overvoltages: $F\ (U_e \geq U_{et}) = 0$ (see Clause B.3)
U_{e2}	(kV)	value of the phase-to-earth overvoltage having a 2 % probability of being exceeded: $F\ (U_e \geq U_{e2}) = 0{,}02$ (see Clause B.3)
U_{e50}	(kV)	50 % value of the cumulative distribution $F\ (U_e)$ of the phase-to-earth overvoltages (see Clause B.3)
U_l	(kV)	amplitude of the impinging lightning overvoltage surge
U_m	(kV)	highest voltage for equipment
U_n	(kV)	nominal voltage
U_p	(kV)	amplitude of a phase-to-phase overvoltage
U_{p2}	(kV)	value of the phase-to-phase overvoltage having a 2 % probability of being exceeded: $F\ (U_p \geq U_{p2}) = 0{,}02$ (see Clause B.3)
U_{p50}	(kV)	50 % value of the cumulative distribution $F\ (U_p)$ of the phase-to-phase overvoltages (see Clause B.3)
U_r	(kV)	rated voltage of an arrester based on temporary overvoltages
U_s	(kV)	highest voltage of a system
U_w	(kV)	standard withstand voltage
U_{pl}	(kV)	lightning impulse protection level of an arrester
U_{ps}	(kV)	switching impulse protection level of an arrester

Documents
Document Sharing Hub
Full document details: IEC 60071-2 2023 RLV

U_{pt}	(kV)	truncation value of the cumulative distribution F (U_p) of the phase-to-phase overvoltages: F ($U_p \geq U_{pt}$) = 0 (see Clause B.3)
U_{rp}	(kV)	amplitude of the representative overvoltage
U_{rw}	(kV)	required withstand voltage
U_{T1}	(kV)	overvoltage applied at the primary winding of a transformer which produces (by transference) an overvoltage on the secondary winding.
U_{T2}	(kV)	overvoltage at the secondary winding of a transformer produced (by transference) by an overvoltage applied on the primary winding.
~~*UHV*~~	~~(-)~~	~~ultra high voltage: the highest voltage of the transmission system exceeding 800 kV.~~
u	(p.u.)	per unit value of the amplitude of an overvoltage (or of a voltage) referred to $U_s \sqrt{2}/\sqrt{3}$.
w_{21}	(-)	ratio of transformer secondary to primary phase-to-phase voltage.
W	(kJ)	required energy absorption of an arrester.
W_{th}	(kJ/kV)	thermal energy rating of an arrester.
X	(m)	distance between struck point of lightning and substation.
X_p	(km)	limit overhead line distance within which lightning events have to be considered.
X_T	(km)	overhead line length to be used in simplified lightning overvoltage calculations.
X_0	(Ω)	zero sequence reactance of a system.
X_1	(Ω)	positive sequence reactance of a system.
X_2	(Ω)	negative sequence reactance of a system.
x	(-)	normalized variable in a discharge probability function $P(U)$ of a self-restoring insulation.
x_M	(-)	normalized variable in a discharge probability function $P(U)$ of M parallel self-restoring insulations.
Z	(kV)	conventional deviation of the discharge probability function $P(U)$ of a self-restoring insulation.
Z_0	(Ω)	zero sequence impedance.
Z_1	(Ω)	positive sequence impedance.
Z_2	(Ω)	negative sequence impedance.
Z_e	(Ω)	surge impedance of the overhead line earth wire.
Z_L	(Ω)	surge impedance of the overhead line.
Z_M	(kV)	conventional deviation of the discharge probability function $P(U)$ of M parallel self-restoring insulations.
Z_s	(Ω)	surge impedance of the substation phase conductor.
z	(-)	normalized value of the conventional deviation Z referred to U_{50}.
α	(-)	ratio of the negative switching impulse component to the sum of both components (negative + positive) of a phase-to-phase overvoltage.
β	(kV)	scale parameter of a Weibull cumulative function.
$\beta_{c\text{-}p}$	(kV)	scale parameter of a Weibull cumulative function, in case-peak method.

Documents
Document Sharing Hub
Full document details: IEC 60071-2 2023 RLV

$\beta_{\text{p-p}}$	(kV)	scale parameter of a Weibull cumulative function, in phase-peak method.
U_0	(kV)	truncation value of a Weibull cumulative function.
η	(-)	electric field utilization factor.
Φ		Gaussian integral function.
ϕ	(-)	inclination angle of a phase-to-phase insulation characteristic.
γ	(-)	shape parameter of a Weibull-3 cumulative function.
σ	(p.u.)	per unit value of the conventional deviation (S_{e} or S_{p}) of an overvoltage distribution.
$\sigma_{\text{c-p}}$	(p.u.)	per unit value of the conventional deviation (S_{e} or S_{p}) of an overvoltage distribution, in case-peak method.
$\sigma_{\text{p-p}}$	(p.u.)	per unit value of the conventional deviation (S_{e} or S_{p}) of an overvoltage distribution, in phase-peak method.
ρ	(Ωm)	soil resistivity.
τ	(µs)	tail time constant of a lightning overvoltage due to back-flashovers on overhead lines.

4 Concepts governing the insulation co-ordination

Insulation co-ordination basically helps to determine and dimension the dielectric strength of the equipment and system insulation in such a way that for all expected operating voltages and overvoltages the equipment reliably withstand.

The selection of the dielectric strength of equipment and system should consider economic issues of total costs, such as equipment and system costs, maintenance costs, and costs caused by insulation failure. Insulation coordination is complex task considering technical and economic evaluation criteria.

For those concepts, required withstand voltage is defined as test voltage that the insulation of the equipment shall withstand at the standard withstand voltage test to ensure that the insulation will meet the performance criterion when subjected to a given class of overvoltages in actual service conditions and for the whole service duration.

Figure 1 of IEC 60071-1:2019 shows an overall procedure flow chart as overview for determination of the rated or standard insulation level and gives links for further definitions and descriptions.

Representative overvoltages (Urp) produce the same dielectric effect on the insulation as overvoltages of a given class occurring in service due to various origins. They are first calculated taking surge arrestors as countermeasures to be placed to reduce the overvoltages. Digital simulation is generally used for representative overvoltage determination in the recent procedure of insulation co-ordination. Co-ordination withstand voltages (U_{cw}) are determined by multiplying value of Urp with a coordination factor (K_{c}) to meet the performance criterion. Besides, simulations of overvoltage events combined with the simultaneous evaluation of the risk of failure, permit the direct determination of the statistical U_{cw} without the intermediate step of determining the Urp. Moreover, because the actual operating conditions of electrical equipment can deviate from the standardized test conditions in the laboratory, the required withstand voltages (Urw) are determined with the aid of altitude correction and safety factors (K_{a} and K_{s}).

Overall insulation co-ordination can be summarized in the following four steps:

Documents
Document Sharing Hub
Full document details: IEC 60071-2 2023 RLV

1) Determination of all representative voltages and overvoltages (U_{rp}) in the network, as described in Clause 5.
2) Determination of the co-ordination withstand voltages (U_{cw}) required for the consideration of the accuracy evaluation of the representative overvoltages and the distribution of the overvoltages and the insulation characteristics, as described in Clause 6.
3) Conversion of the co-ordination withstand voltages into the required withstand voltage (U_{rw}) for the tests taken altitude correction and safety factors into account, as described in Clause 7.
4) Selection of the standard withstand voltages (U_{w}), as described in Clause 8.

5 Representative voltage stresses in service

5.1 Origin and classification of voltage stresses

In IEC 60071-1, the voltage stresses are classified by suitable parameters such as the duration of the power-frequency voltage or the shape of an overvoltage according to their effect on the insulation or on the protection device. The voltage stresses within these classes have several origins:

– continuous (power-frequency) voltages: they originate from the system operation under normal operating conditions;
– temporary overvoltages: they can originate from faults, switching operations such as load rejection, resonance conditions, non-linearities (ferroresonances) or by a combination of these;
– slow-front overvoltages: they can originate from faults, switching operations or direct lightning strokes to the conductors of overhead lines;
– fast-front overvoltages: they can originate from switching operations, lightning strokes or faults;
– very-fast-front overvoltages: they can originate from faults or switching operations in gas-insulated substations (GIS);
– combined overvoltages: they may have any origin mentioned above. They occur between the phases of a system (phase-to-phase), or on the same phase between separated parts of a system (longitudinal).

All the preceding overvoltage stresses, except combined overvoltages, are discussed as separate items under 5.3. Combined overvoltages are discussed where appropriate within one or more of these items.

In all classifications of voltage stresses, transference through transformers should be taken into account (see Annex D).

In general, all classes of overvoltages may exist in both voltage ranges I and II (see IEC 60071-1). However, experience has shown that certain voltage classifications are of more critical importance in a particular voltage range; this will be dealt with in this document. In any case, it should be noted that the best knowledge of the stresses (peak values and shapes) is obtained with detailed studies employing adequate models for the system and for the characteristics of the overvoltage limiting devices.

In the analysis of power system, digital simulation tools, such as electromagnetic transients simulation tool, have been used in many countries. In some countries, the comparison of analysis results and measured values is also performed ~~in each country~~. Its validity has been confirmed up to UHV systems. For example, in the case of UHV lines in Japan and China, the maximum error between measurements and simulation for switching overvoltages is about 5 %, which is ~~agreeable~~ acceptable in the design of transmission lines. For more detailed information, reference can be made to the CIGRE activity [1].

Documents
Document Sharing Hub
Full document details: IEC 60071-2 2023 RLV

5.2 Characteristics of overvoltage protection devices

5.2.1 General remarks

To ensure a safe, reliable and economic design and operation of high voltage networks, substations and equipment, the use of overvoltage protection devices is necessary.

The overvoltage protection devices shall be designed and installed to limit the magnitudes of overvoltages at the terminals of the equipment to be protected. Generally, an effective overvoltage protection is provided against slow-front overvoltages (SFO) and fast-front overvoltages (FFO).

It has to be regarded that, especially under FFO conditions, the overvoltage at the terminals of the overvoltage protection device and of the equipment to be protected are in general not the same. Inductive voltage drops across connecting leads and, much more, travelling wave processes are responsible for that.

Metal-oxide surge arresters (MOSA) without gaps are the "standard" arresters that are to be installed in all substations or directly at the pole mounted transformers and cable terminations in distribution lines. As surge arresters have a limited protection distance in the range of only a few, up to several tens of meters, depending on the system voltage level, they shall be installed as close as possible to the equipment to be protected. It ~~may~~ could be necessary to install additional arresters at the line entrances of substations.

In some countries, MOSA with internal series gaps are used, which are applied to power systems of U_s up to 52 kV and which are covered by their own test standard (IEC 60099-6).

Besides this general application of MOSA as protection devices, line surge arresters (LSA) are often used for overhead transmission and distribution lines. They prevent insulator flashovers due to direct lightning strikes to the conductor of an unshielded line, by a shielding failure of a shielded line or due to back flashovers. For this purpose, externally gapped (EGLA) and non-gapped (NGLA) line arresters are used.

In addition, spark gaps are still sometimes taken into account as an alternative overvoltage limiting device, although standards are not available within IEC. In general, however, surge arresters should be preferred, as spark gaps produce steep voltage rises directly at the equipment to be protected, and their sparkover characteristic under FFO is sometimes critical. As no standard exists, their sparkover voltage versus time characteristics should be requested from the manufacturer or established by the user on the basis of his own specifications.

5.2.2 Metal-oxide surge arresters without gaps (MOSA)

5.2.2.1 General

The protection characteristics and application of MOSA are specified by IEC 60099-4 and IEC 60099-5.

The general procedure for selection of surge arresters is recommended in IEC 60099-5:

– determination of continuous operating voltage U_c;

– determination of rated voltage U_r based on temporary overvoltages;

– determination of required energy absorption W and selection of nominal discharge current I_n;

– determination of lightning impulse protection level U_{pl} and switching impulse protection level U_{ps}.

The protection levels can be used for representative slow-front and fast-front overvoltages. The co-ordination lightning impulse withstand voltage is determined under consideration of the

AVA Documents
Document Sharing Hub
Full document details: IEC 60071-2 2023 RLV

lightning performance of the overhead lines, the acceptable failure rate of the equipment and the protection zone of the arrester.

The procedure is iterative. If, after the selection procedure, the protection levels of MOSA are too high, a lower continuous voltage, a higher nominal discharge current, a higher energy absorption capability or a reduced distance between the arrester and the protected equipment should be investigated. It has to be regarded, though, that the continuous operating voltage, U_c, shall never be lower than 1,05 times the highest voltage of the system, U_s, divided by $\sqrt{3}$. These measures will result either directly in lower MOSA residual voltages at a given impressed impulse current amplitude or, due to the reduced effects of traveling waves, in reduced overvoltage levels at the protected equipment for a given MOSA residual voltage.

The evaluation of protection levels gives a value representing a generally acceptable approximation. IEC 60099-5 gives detailed information about the protection performance of surge arresters.

5.2.2.2 Protection characteristics related to fast-front overvoltages

The following voltages characterize the fast-front protection level of a MOSA:

– lightning impulse protection level U_{pl} (also designated as LIPL);

– maximum residual voltage at steep current impulse.

The lightning impulse protection level is the maximum residual voltage at the nominal discharge current ~~with an 8 µs to 20 µs~~ (IEC 60099-4). For the insulation co-ordination of UHV systems, surge arresters with low protection levels are of particular importance. The nominal discharge current for UHV arresters is typically 20 kA.

~~The resulting steep current impulse (with a front time of 1 µs) protection voltage has to be considered in case of inductive voltage drops across the connection leads and the arrester length.~~ The resulting protection voltage under the impact of a steep current impulse (with a front time of 1 µs) is typically a few percent higher than U_{pl}. Additionally, inductive voltage drops across the connection leads and the arrester length have to be considered for steep current impulses. For insulation coordination studies, including steep lightning surges, different arrester models considering the increase in protection voltage have been suggested. The background is described in IEC 60099-5.

5.2.2.3 Protection characteristics related to slow-front overvoltages

The slow-front protection level of a MOSA is characterized by the switching impulse protection level U_{ps} (also designated as SIPL), which is the maximum residual voltage at the specified switching impulse discharge current as specified in IEC 60099-4 or at other current magnitudes on agreement between arrester manufacturer and user. Inductive voltage drops and travelling wave phenomena (protection distances) do not have to be considered.

For distribution arresters, switching impulse protection levels are not specified, as this is usually not a concern in distribution systems.

Especially for UHV arresters, other switching impulse currents may be used due to the possible suppression of slow-front overvoltages in UHV systems by adopting the following measures:

– controlled switching;

– circuit breakers with closing or closing/opening resistors;

– any combination of the above measures.

5.2.2.4 Energy handling capability

Energy handling capability of a MOSA is defined by two characteristics.

Documents
Document Sharing Hub
Full document details: IEC 60071-2 2023 RLV

– For distribution ("D") arresters, which are further sub-classified as DH, DM, DL arresters (the letters "H", "M" and "L" in the designation standing for "high", "medium" and "low" duty, respectively):
  - repetitive charge transfer rating, Q_{rs};
  - thermal charge transfer rating, Q_{th}.
– For station ("S") arresters, which are further sub-classified as SH, SM, SL arresters:
  - repetitive charge transfer rating, Q_{rs};
  - thermal energy rating, W_{th}.

NOTE The former line discharge class system for station arresters does not exist anymore since publication of IEC 60099-4:2014.

5.2.3 Line surge arresters (LSA) for overhead transmission and distribution lines

Purpose and characteristics of line surge arresters are described in IEC 60099-5. Non gapped line arresters (NGLA) are basically standard MOSA, specified and tested according to IEC 60099-4, while externally gapped line arresters (EGLA) are specified and tested according to IEC 60099-8.

Energy handling capability of NGLAs is defined, in addition to the characteristics of MOSA, by their rated lightning impulse discharge capability.

EGLAs protect insulator assemblies only from lightning-caused flashovers. Therefore, it is important to determine the lightning impulse protection characteristics of the arrester comprising the sparkover voltage for fast-front and standard lightning impulse, and the residual voltages for the nominal discharge current. Additionally, the insulation withstand of the EGLA with respect to maximum slow-front overvoltages on the system has to be determined.

The correct co-ordination between flashover characteristics of the insulator assembly and the sparkover voltage of the EGLA shall be demonstrated with standard lightning impulse voltage and the residual voltages. Any sparkover operation under lightning impulse voltage shall occur in the external series gap of the EGLA without causing any flashover of the insulator assembly to be protected.

EGLAs have no operating duties for slow-front surges and temporary power-frequency overvoltages (TOV).

EGLAs shall not operate, in sound as well as in failed (overloaded) condition of the series varistor unit (SVU), at the specified switching impulse withstand voltage and maximum TOV level of the system.

The rated voltage of an EGLA is the maximum permissible RMS value of power frequency voltage between its terminals, at which it is designed to operate correctly. It shall, therefore, be equal to or higher than the maximum power-frequency temporary overvoltage expected in the intended installation. The rated voltage is also used as a reference parameter for the specification of operating and current interrupting characteristics.

EGLAs are classified by their nominal discharge currents and their high current impulse withstand capabilities. Two alternative classification systems are available ("Series X" and "Series Y"; for details see IEC 60099-8).

Documents
Document Sharing Hub
Full document details: IEC 60071-2 2023 RLV

5.3 General approach for the determination of representative voltages and overvoltages

5.3.1 Continuous (power-frequency) voltage

Under normal operating conditions, the power-frequency voltage can be expected to vary somewhat in magnitude and to differ from one point of the system to another. For purposes of insulation design and co-ordination, the representative continuous power-frequency voltage shall, however, be considered as constant and equal to the highest system voltage. In practice, up to 72,5 kV, the highest system voltage U_s may be substantially lower than the highest voltage for equipment U_m, while, with the increase of the voltage, both values tend to become equal.

5.3.2 Temporary overvoltages

5.3.2.1 General

Temporary overvoltages are characterized by their amplitudes, their voltage shape and their duration. All parameters depend on the origin of the overvoltages, and amplitudes and shapes may even vary during the overvoltage duration.

For insulation co-ordination purposes, the representative temporary overvoltage is considered to have the shape of the standard short duration (1 min) power-frequency voltage. Its amplitude may be defined by one value (the assumed maximum), a set of peak values, or a complete statistical distribution of peak values. The selected amplitude of the representative temporary overvoltage shall take into account

– the amplitude and duration of the actual overvoltage in service, and
– the ~~amplitude/duration~~ power frequency withstand characteristic of the insulation considered.

If the latter characteristic is not known, as a simplification the amplitude may be taken as equal to the actual maximum overvoltage having an actual duration of less than 1 min in service, and the duration may be taken as 1 min.

In particular cases, a statistical co-ordination procedure may be adopted describing the representative overvoltage by ~~an amplitude/duration~~ a distribution frequency of the temporary overvoltages expected in service (see 6.3.2).

5.3.2.2 Earth faults

A phase-to-earth fault may result in phase-to-earth overvoltages affecting the two other phases. Temporary overvoltages between phases or across longitudinal insulation normally do not arise. The overvoltage shape is a power-frequency voltage.

The overvoltage amplitudes depend on the system neutral earthing and the fault location. Guidance for their determination is given in Annex A. In normal system configurations, the representative overvoltage amplitude should be assumed equal to its maximum value. Abnormal system configurations, for example system parts with unearthed neutrals in a normally earthed neutral system, should be dealt with separately, taking into account their probability of occurrence simultaneously with earth faults.

The highest voltage at power-frequency which can appear on a sound phase during the occurrence of an earth fault depends not only on the earth fault factor but also on the value of the operating voltage at the time of the fault which can be generally taken as the highest system voltage U_s.

The duration of the overvoltage corresponds to the duration of the fault (until fault clearing). In earthed neutral systems, it is generally less than 1 s. In resonant earthed neutral systems with fault clearing it is generally less than 10 s. In systems without earth-fault clearing, the duration

AVA Documents
Document Sharing Hub
Full document details: IEC 60071-2 2023 RLV

may be several hours. In such cases, it may be necessary to define the continuous power-frequency voltage as the value of temporary overvoltage during earth fault.

~~NOTE – Attention is drawn to the fact that the highest voltage at power-frequency which can appear on a sound phase during the occurrence of an earth fault depends not only on the earth fault factor but also on the value of the operating voltage at the time of the fault which can be generally taken as the highest system voltage U_s.~~

5.3.2.3 Load rejection

Phase-to-earth and longitudinal temporary overvoltages due to load rejection depend on the rejected load, on the system layout after disconnection and on the characteristics of the sources (short-circuit power at the station, speed and voltage regulation of the generators, etc.).

The three phase-to-earth voltage rises are identical and, therefore, the same relative overvoltages occur phase-to-earth and phase-to-phase. These rises may be especially important in the case of load rejection at the remote end of a long line (Ferranti effect) and they mainly affect the apparatus at the station connected on the source side of the remote open circuit-breaker.

The longitudinal temporary overvoltages depend on the degree of phase angle difference after network separation, the worst possible situation being a phase opposition.

From the point of view of overvoltages, a distinction should be made between various types of system layouts. As examples, the following extreme cases can be considered:

– systems with relatively short lines and high values of the short-circuit power at the terminal stations, where low overvoltages occur;
– systems with long lines and low values of the short-circuit power at the generating site, which are usually in the extra-high voltage range at their initial stage, and on which very high overvoltages can arise if a large load is suddenly disconnected.

In analysing temporary overvoltages, it is recommended that consideration be given to the following (where the 1,0 p.u. reference voltage equals $U_s\sqrt{2}/\sqrt{3}$).

– In moderately extended systems, a full load rejection can give rise to phase-to-earth overvoltages with amplitude usually below 1,2 p.u. The overvoltage duration depends on the operation of voltage-control equipment and may be up to several minutes;
– In extended systems, after a full load rejection, the phase-to-earth overvoltages may reach 1,5 p.u., or even more when Ferranti or resonance effects occur. Their duration may be in the order of some seconds;
– If only static loads are on the rejected side, the longitudinal temporary overvoltage is normally equal to the phase-to-earth overvoltage. In systems with motors or generators on the rejected side, a network separation can give rise to a longitudinal temporary overvoltage composed of two phase-to-earth overvoltage components in phase opposition, whose maximum amplitude is normally below 2,5 p.u. (greater values can be observed for exceptional cases such as very extended high-voltage systems).

5.3.2.4 Resonance and ferroresonance

Temporary overvoltages due to resonance and ferroresonance generally arise when circuits with large capacitive elements (lines, cables, series compensated lines) and inductive elements (transformers, shunt reactors (see Annex K) having non-linear magnetizing characteristics are energized, or as a result of load rejections.

Temporary overvoltages due to resonance phenomena can reach extremely high values. They shall be prevented or limited by measures recommended in 5.3.2.7. They shall therefore not normally be considered as the basis for the selection of the surge arrester rated voltage or for the insulation design unless these remedial measures are not sufficient (see 5.3.2.8).

Documents
Document Sharing Hub
Full document details: IEC 60071-2 2023 RLV

5.3.2.5 Longitudinal overvoltages during synchronization

The representative longitudinal temporary overvoltages are derived from the expected overvoltage in service which has an amplitude equal to twice the phase-to-earth operating voltage and a duration of several seconds to some minutes.

Furthermore, when synchronization is frequent, the probability of occurrence of an earth fault and consequent overvoltage shall be considered. In such cases, the representative overvoltage amplitudes are the sum of the assumed maximum earth-fault overvoltage on one terminal and the continuous operating voltage in phase opposition on the other.

5.3.2.6 Combinations of temporary overvoltage origins

5.3.2.6.1 General

Temporary overvoltages of different origins shall be treated as combined only after careful examination of their probability of simultaneous occurrence. Such combinations may lead to higher arrester ratings with the consequence of higher protection and insulation levels; this is technically and economically justified only if this probability of simultaneous occurrence is sufficiently high.

5.3.2.6.2 Earth fault with load rejection

The combination of earth fault and load rejection can exist when, during a fault on the line, the load side breaker opens first and the disconnected load causes a load rejection overvoltage in the still faulted part of the system until the supply side circuit-breaker opens.

The combination of earth fault and load rejection can also exist when a large load is switched off and the temporary overvoltage due to this causes a subsequent earth fault on the remaining system. The probability of such an event, however, is small when the overvoltages due to the change of load are themselves small, and a subsequent fault is only likely to occur in extreme conditions such as in massive pollution conditions.

The combination can further occur as a result of a line fault followed by failure of a circuit-breaker to open. The probability of such a combination, although small, is not negligible since these events are not statistically independent. Such an occurrence, which results in a generator connected through a transformer to a faulted long line, can result in significant overvoltage on the healthy phases. The overvoltage consists of a slow-front transient and a prolonged variable temporary overvoltage which is a function of generator characteristics and governor-voltage regulator actions.

If such combinations are considered probable, system studies are recommended. Without such studies, one may be led to believe that it is necessary to combine these overvoltages, but this is considered too pessimistic for the following reasons:

– the earth fault factor changes when it is related to the load rejection overvoltage;
– the system configuration has changed after the load change – for example, the earth fault factor at generator transformers with earthed neutral is less than 1 after being disconnected from the system;
– for system transformers, the loss of full rated load is not usual.

5.3.2.6.3 Other combinations

As resonance phenomena should be avoided, their combination with other origins should only be considered as an additional result of these resonances. In some systems, however, it is not readily possible to avoid resonance phenomena, and, for such systems, it is important to carry out detailed studies.

Documents
Document Sharing Hub
Full document details: IEC 60071-2 2023 RLV

5.3.2.7 Limitation of temporary overvoltages

5.3.2.7.1 Earth-fault overvoltages

Earth-fault overvoltages depend on the system parameters and can only be controlled by selecting these parameters during the system design. The overvoltage amplitudes are normally less severe in earthed neutral systems. However, an exception exists in earthed neutral systems, a part of which in unusual situations can become separated with unearthed transformer neutrals. In such a situation, the duration of the high overvoltages due to earth faults in the separated part can be controlled by fast earthing at these neutrals, by switches or by specially selected neutral surge arresters, which short-circuit the neutral after failing.

5.3.2.7.2 Sudden changes of load

These overvoltages can be controlled by shunt reactors (see Annex K), series capacitors or static compensators.

5.3.2.7.3 Resonance and ferroresonance

These overvoltages should be limited by de-tuning the system from the resonance frequency, by changing the system configuration, or by damping resistors.

5.3.2.8 Surge arrester protection against temporary overvoltages

Usually, the selection of the rated voltage of the surge arrester is based upon the envelope of the temporary overvoltage expected, taking into account the energy dissipation capability of the surge arrester. In general, matching the surge arrester rating with the temporary overvoltage stress is more critical in range II according to IEC 60071-1, where the margins are lower, than in range I. Usually, the energy capability of the surge arrester under temporary overvoltage stress is expressed as ~~an amplitude/duration~~ a characteristic furnished by the manufacturer.

For practical purposes, surge arresters do not limit temporary overvoltages. An exception is given for temporary overvoltages due to resonance effects, for which surge arresters may be applied to limit or even to prevent such overvoltages. For such an application, careful studies on the thermal stresses imposed on the surge arresters should be performed to avoid their overloading.

5.3.3 Slow-front overvoltages

5.3.3.1 General

Slow-front overvoltages have front durations of some tens to some thousands of microseconds and tail durations in the same order of magnitude, and are oscillatory by nature. They generally arise from:

– line energization and re-energization;
– faults and fault clearing;
– load rejections;
– switching of capacitive or inductive currents;
– distant lightning strokes to the conductor of overhead lines.

The representative voltage stress is characterized by

– a representative voltage shape, and
– a representative amplitude which can be either an assumed maximum overvoltage or a probability distribution of the overvoltage amplitudes.

The representative voltage shape is the standard switching impulse (time to peak 250 µs, and time to half-value on the tail 2 500 µs). The representative amplitude is the amplitude of the

AVA Documents
Document Sharing Hub
Full document details: IEC 60071-2 2023 RLV

overvoltage considered independently from its actual time to peak. However, in some systems in range II, overvoltages with very long fronts may occur and the representative amplitude may be derived by taking into account the influence of the front duration upon the dielectric strength of the insulation.

The probability distribution of the overvoltages without surge arrester operation is characterized by its 2 % value, its deviation and its truncation value. Although not perfectly valid, the probability distribution can be approximated by a Gaussian distribution between the 50 % value and the truncation value, above which no values are assumed to exist. Alternatively, a modified Weibull distribution may be used (see Annex B).

The assumed maximum value of the representative overvoltage is equal to the truncation value of the overvoltages (see 5.3.3.2 to 5.3.3.7) or equal to the switching impulse protection level of the surge arrester (see 5.3.3.8), whichever is the lower value.

5.3.3.2 Overvoltages due to line energization and re-energization

5.3.3.2.1 General

A three-phase line energization or re-energization produces switching overvoltages on all three phases of the line. Therefore, each switching operation produces three phase-to-earth and, correspondingly, three phase-to-phase overvoltages [1] - [4].

In the evaluation of the overvoltages for practical application, several simplifications have been introduced. Concerning the number of overvoltages per switching operation, two methods are in use.

– Phase-peak method: from each switching operation, the highest peak value of the overvoltage on each phase-to-earth or between each combination of phases is included in the overvoltage probability distribution, i.e. each operation contributes three peak values to the representative overvoltage probability distribution. This distribution then has to be assumed to be equal for each of the three insulations involved in each part of insulation, phase-to-earth, phase-to-phase or longitudinal.
– Case-peak method: from each switching operation, the highest peak value of the overvoltages of all three phases to earth or between all three phases is included in the overvoltage probability distribution, i.e. each operation contributes one value to the representative overvoltage distribution. This distribution is then applicable to one insulation within each type.

The overvoltage amplitudes due to line energization depend on several factors including type of circuit-breaker (closing resistor or not), nature and short-circuit power of the busbar from which the line is energized, the nature of the compensation used and the length of the energized line, type of the line termination (open, transformer, surge arrester), etc.

Three-phase re-energizations may generate high slow-front overvoltages due to trapped charges on the re-energized line. At the time of the re-energization, the amplitude of the overvoltage remaining on the line (due to the trapped charge) may be as high as the temporary overvoltage peak. The discharge of this trapped charge depends on the equipment remaining connected to the line, insulator surface conductivity, conductor corona conditions, and re-closing time.

In normal systems single-phase re-energization (re-closing) does not generate overvoltages higher than those from energization. However, for lines in which resonance or Ferranti effects may be significant, single-phase re-closing may result in higher overvoltages than three-phase energization.

The correct probability distribution of the overvoltage amplitudes can be obtained only from careful simulation of switching operations by digital computation, transient analysers, etc., and typical values such as shown in Figure 1 should be considered only as a rough guide. All considerations relate to the overvoltages at the open end of the line (receiving end). The

AVA Documents Document Sharing Hub

Full document details: IEC 60071-2 2023 RLV

overvoltages at the sending end may be substantially smaller than those at the open end. For reasons given in Annex C, Figure 1 may be used for both the phase-peak and case-peak methods.

5.3.3.2.2 Phase-to-earth overvoltages

A procedure for the estimation of the probability distribution of the representative overvoltages is given in Annex C.

As a rough guide, Figure 1 shows the range of the 2 % overvoltage values (in p.u. of $U_s\sqrt{2}/\sqrt{3}$) which may be expected between phase and earth without limitation by surge arresters [2]. The data in Figure 1 are based on a number of field results and studies and include the effects of most of the factors determining the overvoltages.

Figure 1 should be used as an indication of whether or not the overvoltages for a given situation can be high enough to cause a problem. If so, the range of values indicates to what extent the overvoltages can be limited. For this purpose, detailed studies would be required.

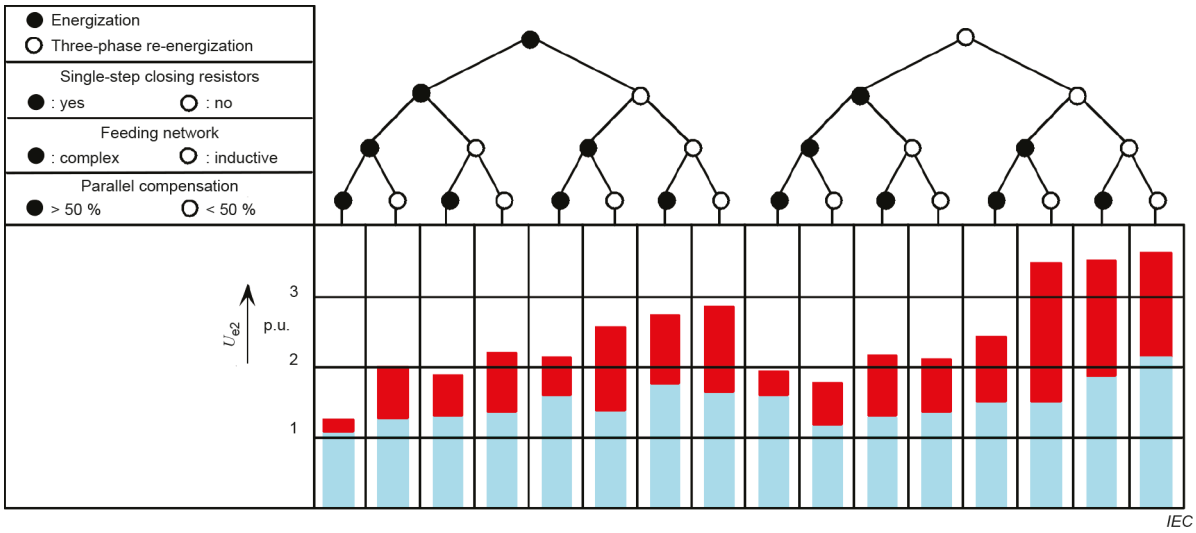

NOTE The red (black) histogram shows the maximum and minimum values of the total overvoltage factors (2% slow-front overvoltages)

Figure 1 – Range of 2 % slow-front overvoltages at the receiving end due to line energization and re-energization [27]

5.3.3.2.3 Phase-to-phase overvoltages

In the evaluation of the phase-to-phase overvoltages, an additional parameter ~~needs to~~ shall be added. As the insulation is sensitive to the subdivision of a given phase-to-phase overvoltage value into two phase-to-earth components, the selection of a specific instant shall take into account the insulation characteristics. Two instants have been selected [1]:

– instant of phase-to-phase overvoltage peak: this instant gives the highest phase-to-phase overvoltage value. It represents the highest stress for all insulation configurations, for which the dielectric strength between phases is not sensitive to the subdivision into components. Typical examples are the insulation between windings or short air clearances;

– phase-to-phase overvoltage at the instant of the phase-to-earth overvoltage peak: although this instant gives lower overvoltage values than the instant of the phase-to-phase overvoltage peak, it may be more severe for insulation configurations for which the dielectric strength between phases is influenced by the subdivision into components. Typical examples are large air clearances, for which the instant of the positive phase-to-earth peak is most severe, or gas-insulated substations (three-phase enclosed), for which the negative peak is most severe.

AVA Documents
Document Sharing Hub
Full document details: IEC 60071-2 2023 RLV

The statistical characteristics of the phase-to-phase overvoltages and the relations between the values belonging to the two instants are described in Annex C. It is concluded that for all insulation types, except for air clearances in range II, the representative overvoltage between phases is equal to the phase-to-phase overvoltage peak. For air clearances in range II, and more particularly for system voltages equal to or greater than 500 kV, the representative phase-to-phase overvoltage should be determined from the overvoltage peaks phase-to-earth and phase-to-phase as described in Annex C.

The 2 % phase-to-phase overvoltage value can approximately be determined from the phase-to-earth overvoltage. Figure 2 shows the range of possible ratios between the 2 % values phase-to-phase and phase-to-earth. The upper limit of this range applies to fast three-phase re-energization overvoltages, the lower limit to three-phase energization overvoltages.

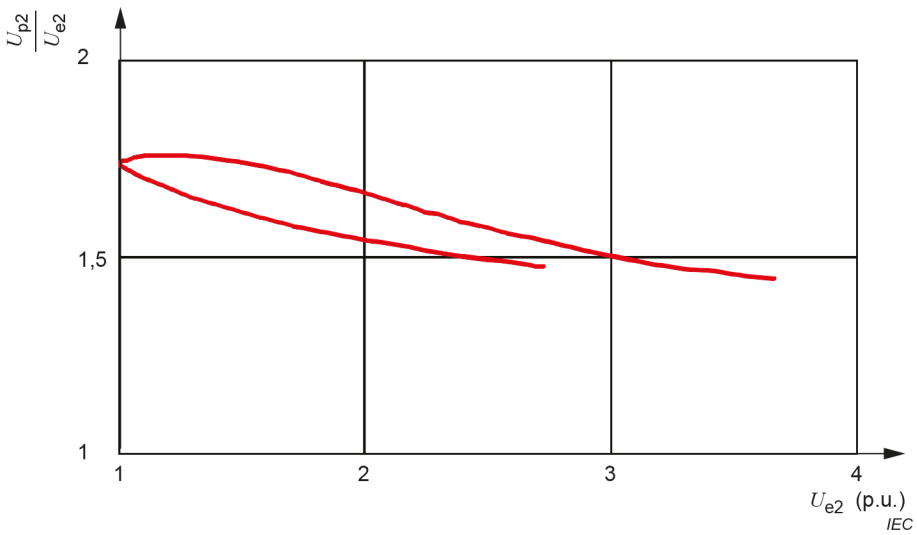

Figure 2 – Ratio between the 2 % values of slow-front overvoltages phase-to-phase and phase-to-earth [28], [29]

5.3.3.2.4 Longitudinal overvoltages

Longitudinal overvoltages between the terminals during energization or re-energization are composed of the continuous operating voltage at one terminal and the switching overvoltage at the other. In synchronized systems, the highest switching overvoltage peak and the operating voltage have the same polarity, and the longitudinal insulation has a lower overvoltage than the phase-to-earth insulation.

The longitudinal insulation between non-synchronous systems, however, can be subjected to energization overvoltages at one terminal and the normal operating voltage peak of opposite polarity at the other.

For the slow-front overvoltage component, the same principles as for the phase-to-earth insulations apply.

5.3.3.2.5 Assumed maximum overvoltages

If no protection by surge arresters is applied, the assumed maximum energization or re-energization overvoltage is:

– for the phase-to-earth overvoltage: the truncation value U_{et};

– for the phase-to-phase overvoltage: the truncation value U_{pt} or, for the external insulation in range II, the value determined according to Annex C, both subdivided into two equal components with opposite polarities;

Documents
Document Sharing Hub
Full document details: IEC 60071-2 2023 RLV

– for the longitudinal overvoltage: the truncation value U_{et} of the phase-to-earth overvoltage due to energization at one terminal, and the opposite polarity peak of the normal operating voltage at the other terminal.

This definition of the maximum longitudinal overvoltage assumes that power frequencies are synchronized (via a parallel path) at both terminals so that the longitudinal overvoltages due to re-energization need not be considered separately (because the effect of any trapped charge is taken into account by this assumption).

5.3.3.3 Fault and fault-clearing overvoltages

Slow-front overvoltages are generated at fault-initiation and fault-clearing by the change in voltage from operating voltage to temporary overvoltage on the healthy phases and the return from a value close to zero back to the operating voltage on the faulted phase. Both origins cause only overvoltages between phase and earth. The overvoltages between phases can be neglected. Conservative estimates for the assumed maximum value of the representative overvoltage U_{et} are as follows:

– fault initiation $U_{et} = (2\,k - 1)\,U_s\sqrt{2}/\sqrt{3}$ (kV crest)

  where k is the earth fault factor.

– fault clearing $U_{et} = 2{,}0\,U_s\sqrt{2}/\sqrt{3}$ (kV crest)

In range I, overvoltages caused by earth faults shall be considered for systems with isolated or resonant earthed transformer neutrals in which the earth fault factor is approximately equal to $\sqrt{3}$. For these systems, the insulation co-ordination can be based on the assumed maximum overvoltage and the probability of their amplitudes needs no consideration.

In range II, when the overvoltages due to line energization or re-energization are controlled to values below 2 p.u., fault and fault clearing overvoltages require careful examination if they are not controlled to the same degree.

5.3.3.4 Overvoltages due to load rejection

Slow-front overvoltages due to load rejection are only of importance in systems of range II in which the energization and re-energization overvoltages are controlled to values below 2 p.u. In these cases, they need examination, especially when generator transformers or long transmission lines are involved.

5.3.3.5 Overvoltages due to switching of inductive and capacitive currents

The switching of inductive or capacitive currents can give rise to overvoltages~~, which may require attention~~. In particular, the following switching operations should be taken into consideration:

– interruption of the starting currents of motors;
– interruption of inductive currents, for example when interrupting the magnetizing current of a transformer or when switching off a shunt reactor (See Annex K) [6];
– switching and operation of arc furnaces and their transformers, which may lead to current chopping;
– switching of unloaded cables and of capacitor banks;
– interruption of currents by high-voltage fuses.

Restrikes of circuit-breakers occurring while interrupting capacitive currents (switching off unloaded lines, cables or capacitor banks) may generate particularly dangerous overvoltages and the use of restrike-free breakers is necessary. Furthermore, when energizing capacitor banks, in particular ungrounded banks, care should be taken to assess the phase-to-phase overvoltages (see also 5.3.4.3).

AVA Documents
Document Sharing Hub

5.3.3.6 Slow-front lightning overvoltages

In systems with long lines (longer than 100 km), slow-front lightning overvoltages originate from distant lightning strokes to the phase conductor, when the lightning current is sufficiently small so as not to cause a flashover of the line insulation and when the strike occurs at a sufficient distance from the considered location to produce a slow-front.

As lightning currents have times to half-value rarely exceeding 200 µs, overvoltages with high amplitudes and times-to-crest critical for the insulation do not occur. Slow-front lightning overvoltages, therefore, are of minor importance for insulation co-ordination and are usually neglected.

5.3.3.7 Limitation of slow-front overvoltages

The most commonly used method of limiting line switching overvoltages is by the use of closing resistors on line breakers. Other means, like point-on-wave control and varistors across interrupting chambers, can also be used to limit overvoltages due to line energization and inductive or capacitive switching.

Inductive voltage transformers connected to the line terminals effectively reduce the charges trapped on the phases of the line after opening. The slow front overvoltages due to a subsequent three-phase re-energization are thus limited to the level of simple line energization.

The saturation effect of the switching impulse strength has a large impact to the air clearances. Closing or opening resistors, surge arresters and/or controlled switching can reduce switching overvoltages. Shunt reactors are also applicable to the reduction of switching overvoltages in overhead transmission lines. However, it is necessary to consider the generation of resonance overvoltages due to slow-front transients when shunt reactors are installed in underground transmission lines (cables) or transmission lines including both overhead line sections and underground line (cable) sections (see Annex K).

5.3.3.8 Surge arrester protection against slow-front overvoltages

Metal-oxide arresters without gaps and specially designed gapped arresters are suitable to protect against slow-front overvoltages in systems with moderate temporary overvoltages, whereas non-linear resistor type arresters operate for slow-front overvoltages only in extreme cases due to the sparkover characteristics of the series gap.

NOTE When the arresters are installed at the ends of long transmission lines for the purpose of limiting slow-front overvoltages, the overvoltages in the middle of the line can be substantially higher than at the line ends.

As a general rule, it can be assumed that metal-oxide arresters limit the phase-to-earth overvoltage amplitudes (kV peak) to approximately twice the arrester rated voltage (kV RMS). This means that metal-oxide surge arresters are suitable for limiting slow-front overvoltages due to line energization and re-energization and switching of inductive and capacitive currents, but not, in general, overvoltages caused by earth faults and fault clearing, as the expected amplitudes of the latter are too low (exception may be made in the case of faults occurring on series-compensated lines).

Overvoltages originating from line energization and re-energization give currents normally less than about 0,5 kA to 2 kA through the arresters (see IEC 60099-4). In this current range, the knowledge of the exact current amplitude is not so important owing to the extreme non-linearity of the metal-oxide material. The slight dependence on current front times which the metal-oxide surge arresters exhibit is also negligible for slow-front overvoltages and can be neglected. Furthermore, it is not necessary to take separation effects into account within substations. Distant overhead line insulation, however, may be stressed by overvoltages substantially higher than the protection level.

Surge arresters are usually installed phase-to-earth and it should be observed that, if metal-oxide arresters are used to limit slow-front overvoltages to a level lower than 70 % of the BIL

AVA Documents
Document Sharing Hub
Full document details: IEC 60071-2 2023 RLV

value of the uncontrolled overvoltage phase-to-earth, the phase-to-phase overvoltages may reach about twice the phase-to-earth protection level of the arrester. The phase-to-phase overvoltage will then consist of two phase-to-earth components with the most frequent subdivision 1:1 [7]. See also 6.3.4.1.

The assumed maximum value of the representative phase-to-earth overvoltage is equal to the protection level of the surge arrester: $U_{rp} = U_{ps}$.

For the phase-to-phase overvoltages, it is twice the protection level or the truncation value of the phase-to-phase overvoltages determined in Annex C, whichever is the smaller value. If lower phase-to-phase overvoltages are required, additional arresters between phases should be installed.

In all cases, the application of surge arresters to control slow-front overvoltages shall take into account the required duty cycle and energy dissipation requirements in choosing the appropriate surge arrester classification.

5.3.4 Fast-front overvoltages

5.3.4.1 Lightning overvoltages affecting overhead lines

Lightning overvoltages are caused by direct strokes to the phase conductors or by back-flashovers, or are induced by lightning strokes to earth close to the line. Induced lightning surges generally cause overvoltages below 400 kV on the overhead line and are, therefore, of importance only for systems in the lower system voltage range. Owing to the high insulation withstand, back-flashovers are less probable in range II than in range I and are rare on systems at 500 kV and above.

The representative shape of the lightning overvoltage is the standard lightning impulse (1,2/50 µs). The representative amplitude is either given as an assumed maximum or by a probability distribution of peak values usually given as the peak value dependent on the overvoltage return rate.

5.3.4.2 Lightning overvoltages affecting substations

5.3.4.2.1 General

The lightning overvoltages in substations and their rates of occurrence depend on

– the lightning performance of the overhead lines connected to it,
– the substation layout, size and in particular the number of lines connected to it, and
– the instantaneous value of the operating voltage (at the moment of the stroke).

The severity of lightning overvoltages for the substation equipment is determined from the combination of these three factors, and several steps are necessary to assure adequate protection. The amplitudes of the overvoltages (without limitation by surge arrester) are usually too high to base insulation co-ordination on these values. In some cases, however, in particular with cable connected substations, the self-protection provided by the low surge impedance of the cables may reduce the amplitudes of the lightning overvoltages to suitably low values (see Annex E).

For the phase-to-phase and the longitudinal insulation, the instantaneous power frequency voltage value on the opposite terminals shall be considered. For the phase-to-phase insulation, it can be assumed that the effects of power-frequency voltage and coupling between the overhead line conductors cancel each other and the opposite terminal can be considered as earthed. For the longitudinal insulation, however, such cancelling effects do not exist and the power-frequency voltage shall be taken into account.

Documents
Document Sharing Hub
Full document details: IEC 60071-2 2023 RLV

5.3.4.2.2 Direct strokes

Shielding penetrations occur at a random point on the power-frequency wave. The effect of the power-frequency at the opposite terminal of a longitudinal insulation has to be taken into account by

- calculating the lightning overvoltage return rates for different instantaneous values of the operating voltage,
- evaluating the insulation failure probability for the various subdivisions into components – usually the sum of the two components is the decisive parameter,
- determining the insulation failure rate dependent on the sum of the lightning overvoltage and of the instantaneous value of power-frequency, and
- applying the performance criterion to this expected failure rate to obtain the necessary sum of the two components.

If this sum is subdivided into a lightning impulse component equal to the representative lightning overvoltage phase-to-earth and a power-frequency component, the power-frequency voltage component will be smaller than the operating voltage phase-to-earth peak. It has been found that a factor of 0,7 may be considered suitable. This means that, for shielding penetration, the longitudinal representative overvoltage should be composed of the representative lightning overvoltage to earth at one terminal and 0,7 times the operating voltage phase-to-earth peak with opposite polarity at the other.

5.3.4.2.3 Back flashovers

Back flashovers are most likely to occur on the phase which has the highest instantaneous power-frequency voltage value of opposite polarity. This means that, for substations, the representative longitudinal lightning overvoltage shall be equal to the sum of the representative lightning overvoltage to earth at one terminal and of the operating voltage peak at the other (opposite polarity).

5.3.4.3 Overvoltages due to switching operations and faults

Fast-front switching overvoltages occur when equipment is connected to or disconnected from the system via short connections mainly within substations. Fast-front overvoltages can also occur when external insulation ~~flashes over~~ breaks down. Such events can cause particularly severe stresses on nearby internal insulation (such as windings).

Although in general oscillatory, for insulation co-ordination purposes the representative overvoltage shape can be considered to correspond to the standard lightning impulse (1,2/50 µs). However, special attention should be paid to equipment with windings because of high inter-turn stresses.

The maximum peak overvoltages depend on type and behaviour of the switching equipment. It is~~, therefore,~~ technically justified to characterize the amplitude of the representative overvoltage by the maximum following values (in p.u. of $U_s\sqrt{2}/\sqrt{3}$):

- circuit-breaker switching without restrike: 2 p.u.;
- circuit-breaker switching with restrike: 3 p.u.;

  NOTE When switching reactive loads, some types of medium voltage circuit breakers tend to produce multiple transient current interruptions resulting in overvoltages up to 6 p.u. unless appropriate protection measures are taken.

- disconnector switching: 3 p.u.

As the overvoltage peak values are usually smaller than those caused by lightning, their importance is restricted to special cases and U_m > 800 kV.

Documents
Document Sharing Hub
Full document details: IEC 60071-2 2023 RLV

As simultaneous occurrence of fast-front switching overvoltages on more than one phase is highly improbable, one can assume that phase-to-phase overvoltages higher than phase-to-earth overvoltages do not exist. For the latter, the previously defined assumed maximum values can be used to check the importance of such overvoltages. If they determine the insulation lightning impulse withstand voltage, more careful investigations are recommended.

5.3.4.4 Limitation of fast-front overvoltage occurrences

Lightning overvoltage occurrences can be limited by appropriate design for the overhead lines. Possible design measures for the limitation of lightning overvoltage occurrences are the following:

– for direct lightning strokes to conductors: appropriate earth-wire shielding design;
– for back flashovers: reduction of the tower footing earthing impedance or addition of insulation;
– usage of line surge arresters.

In some cases, earthed crossarms or spark gaps have been used close to substations in an attempt to limit the amplitude of incoming lightning overvoltages. However, such measures tend to increase the likelihood of flashovers near the station with the consequent generation of fast-front surges. Furthermore, special attention should be given to shielding and tower earthing near the station to lower the probability of back flashovers at this location.

Since transmission towers in range II are taller and inter-phase distances are longer than those in range I, direct lightning strokes to phase conductors should be a matter of some concern in range II even though a ground wire is equipped, especially over 550 kV systems.

The severity of fast-front overvoltages generated by switching operations can be limited by the selection of adequate switching equipment (restrike-free interrupters or breakers, low current chopping characteristic, use of opening or closing resistors, point-on-wave control, etc.).

5.3.4.5 Surge arrester protection against fast-front overvoltages

The protection afforded by surge arresters against fast-front overvoltages depends on

– the amplitude and shape of the overvoltage,
– the protection characteristic of the surge arrester,
– the amplitude and shape of the current through the surge arrester,
– the surge impedance and/or capacitance of the protected equipment,
– the distance between arrester and protected equipment including earthing connections (see Figure 3), and
– the number and surge impedance of the connected lines.

For protection against lightning overvoltages, surge arresters with the following nominal discharge currents are generally applied:

– for systems with U_m in range I: 5 kA or 10 kA;
– for systems with U_m in range II: 10 kA or 20 kA.

When currents through the arrester are expected to be higher than its nominal discharge current, it shall be verified that the corresponding residual voltages still provide a suitable overvoltage limitation.

For the determination of the energy absorption (due to lightning) of surge arresters installed in a substation, it is usually sufficient to assume that the representative amplitude of the prospective lightning overvoltage reaching the substation is equal to the negative 50 % lightning

AVA Documents
Document Sharing Hub
Full document details: IEC 60071-2 2023 RLV

impulse withstand voltage of the overhead line. However, for the total energy absorption, one should consider the possibility that a lightning flash may consist of multiple strokes.

The protection characteristics of a surge arrester are only valid at its location. The corresponding overvoltage limitation at the equipment location, therefore, should account for the separation between the two locations. The greater the separation distance of the surge arrester from the protected equipment, the less is its protection efficient for this equipment, and, in fact, the overvoltage applied to the equipment increases above the protection level of the arrester with increasing separation distance. Furthermore, if the effect due to the length of the arrester is neglected in the determination of its protection characteristics, this length shall be added to the length of the connecting leads in the evaluation of the effective overvoltage limitation. For metal-oxide arresters without gaps, the reaction time of the material itself may be neglected and the arrester length can be added to the connection leads.

For simplified estimation of the representative overvoltage at the protected object, Equation (1) can be used. However, for transformer protection, Equation (1) should be used with caution since a capacitance of more than a few hundred picofarads may result in higher overvoltages.

$$U_{rp} = U_{pl} + 2St_s \quad \text{for } U_{pl} \geq 2St_s \tag{1}$$

$$U_{rp} = 2\,U_{pl} \quad \text{for } U_{pl} < 2St_s \tag{2}$$

where

U_{pl} is the lightning impulse protective level of the arrester (kV);

S is the steepness of the impinging surge (kV/µs);

t_s is the travel time of the lightning surge determined as following:

$$t_s = L / c \tag{3}$$

where

c is the velocity of light (300 m/µs for overhead line);

L is the sum of a_1, a_2, a_3, and a_4 (distances from Figure 3 [m]).

The values of the steepness shall be selected according to the lightning performance of the overhead lines connected to the station and on the adopted risk of failure in the substation. A complete treatment is given in Annex E.

The probability distribution of the representative lightning overvoltage amplitude at the substation can be determined by transient overvoltage calculations taking into account the lightning performance of the transmission lines, the travelling wave behaviour of overhead lines and substation and the performance of the equipment insulation and of the surge arresters dependent on the overvoltage amplitude and shape. References are given in Annex E.

As a general recommendation, the dependence of the insulation withstand on the overvoltage shape should also be considered in the determination of the representative amplitudes. This, in particular, applies to external insulation and to oil-paper insulation, for which the volt-time curve of the insulation may point to representative amplitudes substantially lower than the overvoltage peak values. For GIS or for solid insulation, this difference is negligible and the amplitude of the representative overvoltage is equal to the overvoltage peak.

A simplified method to estimate the representative lightning overvoltage amplitude probability distribution is given in Annex E. The assumed maximum value of the representative lightning

Documents
Document Sharing Hub
Full document details: IEC 60071-2 2023 RLV

overvoltage amplitude is either the truncation value of the probability distribution or a value obtained from experience in existing systems. Methods for the estimation of these values are also included in Annex E.

Recently, digital simulation is used in general. The numerical modelling of power facilities and equipment has become increasingly precise, enabling accurate calculation for lightning overvoltages. Technical guidance is provided in IEC TR 60071-4.

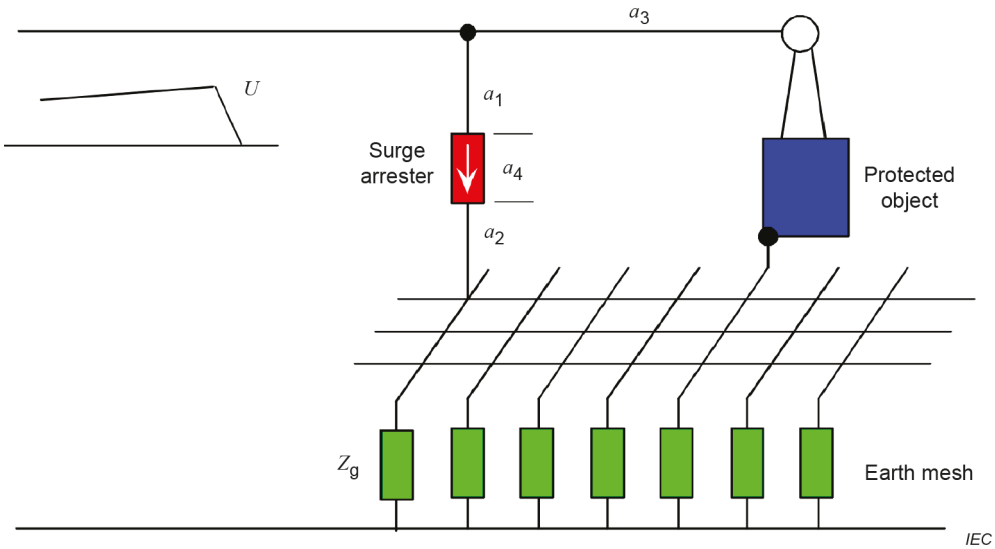

Key

a_1 length of the lead connecting the surge arrester to the line

a_2 length of the lead connecting the surge arrester to earth

a_3 length of the phase conductor between the surge arrester and the protected equipment

a_4 length of the active part of the surge arrester

Z_g earthing impedance (Z_g represents the parallel impedance of all green impedances)

~~U impinging overvoltage surge~~

U_I amplitude of the impinging lightning overvoltage surge

Figure 3 – Diagram for surge arrester connection to the protected object

5.3.4.6 Evaluation method of non-standard lightning overvoltage shape

The "representative overvoltage" stage in the insulation co-ordination procedure is specified to have a standard voltage shape, which is especially meaningful for a lightning impulse in the case of detailed analysis by digital computation. On this subject, recent research has analysed field surges, clarified insulating characteristics for field real surges in comparison with those for the standard voltage shape in the lightning surge time region, and proposed the overvoltage evaluation method for GIS [14] and transformer [15]. These techniques have been discussed in CIGRE working groups, and adopted in the technical brochures [11], [16], [17].

The decay of the field overvoltage is generally large, making the insulation requirements not as severe as those of the standard voltage shape. Consequently, it could be possible in some cases to use lower withstand voltages (see Annex I).

5.3.5 Very-fast-front overvoltages

Very-fast-front overvoltages (VFFO) [13] originate from disconnector operations or faults within GIS due to the fast breakdown of the gas gap and the nearly undamped surge propagation within the GIS. Their amplitudes are rapidly dampened on leaving the GIS, for example at a

AVA Documents Document Sharing Hub

bushing, and their front times are usually increased into the range of those of fast-front overvoltages.

The overvoltage shape is characterized by a fast increase of the voltage nearly to its peak value resulting in a front time below 0,1 µs. This front is usually followed by an oscillation with frequencies above 1 MHz. Dominant frequency components may reach up to some tens of MHz.

For disconnector operations, the VFFO amplitude depends on the disconnector construction and on the substation configuration. In the most unfavourable case, the maximum VFFO amplitude can reach 2,8 p.u.

VFFO due to faults within GIS can have amplitudes up to 1,6 times the breakdown voltages.

VFFO in UHV systems may be dangerous to the insulation of GIS, transformers and voltage transformers. The shape and the amplitude of the overvoltage depend on the kind of connection of the equipment to the GIS.

A representative overvoltage cannot be established because suitable standardizations are not available. Experience show that very-fast-front overvoltages have no influence on the selection of rated withstand voltages up to system voltages of 800 kV.

Special care has to be taken for very-fast transients in GIS of UHV systems. Due to the decreasing ratio of lightning impulse withstand voltage to the system voltage, VFFO can become the limiting dielectric stress defining the dimensions of GIS. How to handle this situation and mitigation measures in respect to insulation co-ordination are described in Annex J.

5.4 Determination of representative overvoltages by detailed simulations

5.4.1 General overview

Detailed simulations can be used for determination of the representative overvoltages U_{rp}. For determination of the representative overvoltages U_{rp}, detailed simulations can be used which are usually achieved by Electro-Magnetic Transients (EMT) simulation tools. Generally accepted computational methods for determining the representative overvoltages U_{rp} are given in the IEC TR 60071-4.

5.4.2 Temporary overvoltages

5.4.2.1 Overview

As mentioned in 5.3.2, temporary overvoltages (TOV) can originate from faults, switching operations, resonance conditions, non-linearities, or by a combination of these. When designing insulation coordination of power systems, TOVs caused by resonance and ferroresonance are generally not considered, as stated in 5.3.2.4. The representative voltage of TOV caused by the other phenomenon can be determined as follows.

NOTE In this document, the per unit value (p.u.) is used as a unit for evaluation of overvoltages (1,0 p.u.equals $U_s\sqrt{2}/\sqrt{3}$).

5.4.2.2 Earth faults

The per unit value of TOV caused by a phase-to-earth fault can be represented by the earth fault factor k. The earth fault factor k depends on the system neutral earthing and the fault location. Annex A shows how to determine the earth fault factor k in detail. With the earth fault factor k determined, calculate per unit value of TOV for the phase-to-earth and phase-to-phase voltages according to 5.3.2.2.

Documents
Document Sharing Hub
Full document details: IEC 60071-2 2023 RLV

5.4.2.3 Load rejection

The per unit value of TOV caused by load rejection depends on the rejected load, on the system layout after disconnection and on the characteristics of the sources (power flow at the station, control circuits of the generators, etc.).

In general, when TOV caused by load rejection is calculated by using a computational method, electric power equipment subject to the computational analysis is first modelled and then a circuit is created: electric power equipment subject to the computational analysis includes generators, transformers, overhead transmission lines, underground transmission lines, surge arresters, circuit breakers, and shunt reactors, and is modelled with an EMT-simulation tool by referring to the methods shown in 7.4 and 12.2 of IEC TR 60071-4:2004. To prepare the circuit, it is necessary to be careful about the following points: 1) in modelling of a generator, a control circuit controlling the generator should be incorporated into the generator; 2) the load side bus of the circuit should be prepared by considering the load condition simulating the power flow observed when load rejection occurred; and 3) a circuit breaker should be incorporated into the circuit so that operational scenario of the circuit breaker by protection relay can be simulated.

Using the circuit created with the above-mentioned method, analyse the load rejection and then calculate the per unit value of TOV for the phase-to-earth and phase-to-phase voltages.

5.4.2.4 Earth faults with load rejection

As shown in 5.3.2.6.2, TOV is seldom caused by a combination of earth faults and load rejection. However, it is necessary to evaluate TOV due to a combination of earth faults and load rejection when insulation coordination of power systems is designed. TOV due to the combination of earth faults and load rejection should be evaluated based on the concepts shown in 5.4.2.3: to be more specific, carry out a computational analysis with a circuit and calculate the per unit value of TOV for the phase-to-earth and phase-to-phase voltages.

5.4.2.5 Determination of representative voltages and overvoltages U_{rp} for TOV

Compare the TOVs caused by earth faults, load rejection, and a combination of earth faults and load rejection with each other. Then determine U_{rp} for TOVs based on the comparison results while taking the following factors into consideration:

a) Surge arrester rated voltage and power frequency voltage versus time characteristic

a) Frequency of occurrence

5.4.3 Slow-front overvoltages

5.4.3.1 Overview

For the calculations of SFO, an established EMT-simulation tool shall be utilized. Specialized transient computation modules for power system simulation programs may also be appropriate. The equipment modelling is appropriate to meet the representation of network components given in IEC TR 60071-4:2004, 7.5. Slow-front overvoltages almost always occur during switching operation. Therefore, the implementation of more detailed models (e.g. for the circuit breaker) may be necessary, depending on the scenario. Detailed calculations for insulation co-ordination studies use deterministic, probabilistic and statistical procedures. The calculations are suitable for determining the minimum distances and the electrical strength of the insulation systems. Guidelines for conducting Slow-front overvoltages analyses are given in IEC TR 60071-4:2004, Clause 9. The established electromagnetic transient models of lines and substations are to be verified by load flow and short-circuit current calculations. An independent load flow calculation can confirm that the line load flows, and the busbar voltages are consistent with the results of the electromagnetic transient program. The calculation of symmetrical and asymmetric short-circuit currents can determine whether the positive and zero sequence impedances of the simulated system are correct.

Documents
Document Sharing Hub
Full document details: IEC 60071-2 2023 RLV

5.4.3.2 Line energization and re-energization

In general, when SFO caused by line energization and re-energization is calculated by using a computational method, electric power equipment subject to a computational analysis is first modelled and then a circuit is created: electric power equipment subject to the computational analysis includes power sources, transformers, overhead transmission lines, underground transmission lines, surge arresters, circuit breakers, and shunt reactors, and is modelled with an EMT-simulation tool by referring to the methods shown in 7.5 and 12.3 of IEC TR 60071-4:2004. The source side bus of the circuit should be prepared by incorporating an inductance element simulating short-circuit impedance.

In analysis estimating SFO caused by line energization and re-energization, it is necessary to simulate the statistical distribution of mechanical operation of circuit breakers and to carry out calculation predetermined times. Note that the statistical distribution of mechanical operation of circuit breakers and the number of calculations may affect the statistical distribution of the SFO to be generated.

When SFO caused by line re-energization is estimated, it is necessary to consider the residual voltage of the line -- voltage remaining in the line or electric charge remaining in the line -- after the line is opened for a certain reason. Therefore, when SFO caused by line re-energization is estimated with an EMT-simulation tool, an overhead transmission line/ underground transmission line should be simulated by using a line model which can simulate the residual voltage of the lines.

5.4.3.3 Determination of representative voltages and overvoltages U_{rp} for SFO

Based on the statistical distribution of SFO obtained through the computational analysis mentioned above, calculate the maximum value of SFO for the phase-to-earth and the phase-to-phase voltages, and the probability that the maximum value of SFO is generated. Based on the results, determine U_{rp} for SFO the phase-to-earth and the phase-to-phase voltages while taking the following factors into consideration:

a) surge arrester rated voltage;

b) frequency of occurrence.

5.4.4 Fast-front overvoltages

5.4.4.1 Overview

In general, fast-front overvoltages are represented by lightning overvoltages.

Lightning overvoltages are generated by direct lightning strokes to the phase conductors of overhead transmission lines (OHTL), by back-flashovers (BFOs) that occur in insulator strings when lightning strikes the transmission tower or the overhead ground wire (OHGW), or by in-direct lightning strokes to the phase conductors. In-direct lightning strokes to the phase conductors, such as lightning strokes on the earth in the vicinity of an OHTL, cause induced lightning overvoltages. The induced lightning overvoltages should only be considered for distribution line insulation design [30] and nominal voltages U_n less than 400 kV, not for power system insulation design.

Based on the matters mentioned above, lightning overvoltages generated by direct lightning strokes to the phase conductors or by BFOs should generally be taken into consideration for power system insulation design.

5.4.4.2 Lightning parameters

5.4.4.2.1 General

In evaluation of lightning overvoltages, it is necessary to consider the lightning parameters including ground flash density (N_g), cumulative frequency distribution of lightning current

AVA Documents
Document Sharing Hub

amplitude ($f_l(i)$), and statistical distributions of lightning current waveshape parameters such as wave front duration time (T_f) and wave tail duration time (T_t). These lightning parameters can be obtained through direct observation or observation with Lightning Location System (LLS).

5.4.4.2.2 Lightning activities

Ground flash density (N_g) is an essential parameter to evaluate the reliability of equipment against lightning. N_g can be obtained by using the LLS which has been used around the world [31]. In general, for power system insulation design, N_g of the target area is estimated by using data obtained through the LLS and then the estimated number of lightnings striking the equipment (Number of Flashes (N_s)) is determined [32].

5.4.4.2.3 Distribution of lightning current amplitudes

The level of lightning overvoltage generated in an OHTL, at a substation, or at a power station varies depending on the lightning current amplitude. High lightning overvoltage is likely to induce massive-scale and extensive lightning failures. Therefore, the cumulative frequency distribution of lightning current amplitude of the target area is indispensable information for power system insulation design. The cumulative frequency distribution of lightning current amplitude can be obtained from direct observation or observation results with LLS [32]-[35]. In general, for power system insulation design, lightning overvoltages should be estimated by using the cumulative frequency distribution of lightning current amplitude of the target area.

5.4.4.2.4 Distribution of lightning waveshape parameters

Lightning current waveshape is an essential parameter which determines the breakdown time of back-flashover (BFO), the waveshape and amplitude of voltage across insulator strings when the BFO occurred, and the waveshape of lightning surge which enters a substation or a power station. Statistical distribution of data obtained for each lightning current waveshape parameter can be directly observed [32]- [35]. Note that the statistical distribution of data for lightning current waveshape parameters varies depending on the region and target. In general, for power system insulation design, lightning overvoltages are analysed by assuming the wave front duration time (T_f) and wave tail duration time (T_t) both of which are the elements that should be considered in insulation design. The lightning current waveshapes applied to analysis includes double ramp shape, double exponential shape, and CIGRE concave shape.

5.4.4.3 Incidence of lightning strike and overhead line shielding

5.4.4.3.1 General

It is important to evaluate the lightning performance of an OHTL for surmising the characteristics of lightning surge entering a substation or a power station. Therefore, the lightning shielding effect of the OHGWs installed on the OHTL should be quantitatively evaluated. Lightning overvoltages caused on an OHTL are generally divided into three types as follows by their causes:

– lightning overvoltage caused by a direct strike to a phase conductor,
– lightning overvoltage caused by BFOs which is generated by a lightning strike to a transmission tower or an OHGW,
– lightning overvoltage caused by an in-direct lightning strike around an OHTL.

Among them, since the induced lightning overvoltage caused by in-direct lightning is smaller than the above-mentioned two other types of lightning overvoltage, it is unnecessary to consider the induced lightning overvoltage caused by in-direct lightning. For power system insulation design, therefore, the lightning shielding effect of OHGWs should be evaluated based on the lightning overvoltage caused by a direct strike to a phase conductor and that caused by BFO.

Documents
Document Sharing Hub
Full document details: IEC 60071-2 2023 RLV

5.4.4.3.2 Evaluation of lightning performance of overhead lines

For evaluation of the lightning performance of OHTLs, it is necessary to evaluate the lightning shielding effect provided by OHGWs or phase conductors. Various methos such as Electro-Geometric Model (EGM), Rolling Sphere Method (RSM) and Leader Progression Model (LPM) have been used to evaluate the lightning striking distance to OHGWs or phase conductors. When evaluating the lightning shielding effects of these conductors, an EGM is generally applied which was designed by considering the striking distance when a lightning stroke occurred [32], [36]. EGM determines whether the lightning struck OHGWs or phase conductors, and then clarifies the waveshape of lightning surge that would thereafter enter the substation or power station through the transmission line. In recent years, the lightning performance of OHTL has been evaluated through any one of the following analyses: a conventional analysis, an analysis using a model designed by modifying the EGM based on the observation results regarding lightning characteristics, an analysis using an LPM considering the characteristics of lightning discharge path development, or an analysis using a model considering the lightning attachment process [37].

5.4.4.3.3 Estimation of minimum shielding-failure-flashover current and minimum back-flashover current

By evaluating the lightning performance of an OHTL, it is possible to know whether the lightning struck an OHGW/a transmission tower or a phase conductor for each lightning current amplitude of lightning stroke. Lightning strokes to an OHGW/a transmission tower cause BFO, while those to a phase conductor cause shielding failure.

The lightning surge generated by a lightning stroke to a phase conductor varies depending on the current waveshape and current amplitude which enters the phase conductor. When the lightning overvoltage caused by the lightning surge exceeds the insulation level of the line (flashover voltage of insulator strings), a normal flashover occurs thereby chopping the waveshape. As a result, effects of lightning surges entering the substation or power station are suppressed. In general, the critical current at which the lightning surge overvoltage generated by the shielding failure current becomes equivalent to the insulation level of the line (flashover voltage of insulator strings) is called the minimum shielding-failure-flashover (SFFO) current.

Meanwhile, voltage waveshape and its amplitude generated across the insulator strings due to lightning strokes to an OHGW or a transmission tower varies depending on the lightning current waveshape and its peak value. Therefore, when the voltage generated across the insulator strings exceeds the insulation level of the OHTL (flashover voltage of insulator strings), a BFO is observed, and then a lightning current enters a phase conductor from the tower, resulting in generation of lightning surge entering the substation or power station. The minimum current at which a BFO occurs is called the minimum back-flashover current.

Both the minimum SFFO current and the minimum back-flashover current should be considered in the insulation design to protect equipment from lightning overvoltage, because both currents are essential parameters that determine the lightning surge entering substations or power stations.

5.4.4.3.4 Evaluation of limit distance from lightning points to substations

Since lightning occurs randomly, lightning strokes occur everywhere on an OHTL. Therefore, insulation design at substations or power stations should be provided by appropriately evaluating lightning surge entering the substations or power stations from OHTLs.

This document defined a simplified method applicable to evaluation of lightning overvoltages generated at substations or power stations.

Meanwhile, the following three methods (1)-(3) are applicable when lightning overvoltages generated at substations or power stations are evaluated based on a computational analysis:

Documents
Document Sharing Hub
Full document details: IEC 60071-2 2023 RLV

(1) First determine the minimum SFFO current and minimum back-flashover current for each voltage class, and second set the lightning point which is a spot where the maximum lightning overvoltage is expected to be generated at the substation or power station due to lightning strokes to the transmission line. With the currents determined above, then carry out analysis and evaluate the lightning overvoltages to be generated at the substation or power station.

(2) First randomly generate lightning strokes onto a transmission line connected to the substation or power station and then calculate the lightning overvoltage that enters the substation or power station based on the minimum SFFO current and minimum back-flashover current both of which are estimated beforehand, and statistically evaluate the lightning overvoltages.

(3) First apply lightning strokes with randomly-generated lightning current amplitude onto a transmission line connected to the substation or power station and then evaluate whether shielding failure occurred. Based on the results, calculate the minimum SFFO current and minimum back-flashover current at each stroke point. Calculate the lightning surge overvoltage for each current that enters the substation or power station and statistically evaluate the lightning overvoltages.

The above-mentioned method (3) is difficult for practical use despite being a statistical approach. Therefore, either the above-mentioned method (1) or (2) is applied to actual insulation design.

5.4.4.4 Evaluation of lightning overvoltages entering substations

5.4.4.4.1 General

A method for numerically analysing lightning surge that enters a substation or power station are shown in IEC TR 60071-4. Here, the outline of the method and a method for determining a representative voltage and overvoltage for fast-front overvoltage (FFO) based on the analytical results is described.

5.4.4.4.2 Modelling of transmission lines and substations/power stations

As shown in Figure 4, prepare numerical models of equipment such as OHTL, substation, power station, and lightning arrester by referring to IEC 60071-4 [38]. On this occasion, it is unnecessary to consider the waveshape distortion and deformation caused by corona discharge. Apply the waveshape of the lightning current source having any of the following shapes: double ramp shape, a double exponential shape, and CIGRE concave shape. Connect in parallel the lightning path impedance to the current source when necessary. Simulate BFO by using an equal area model or a leader propagation model [38], [39].

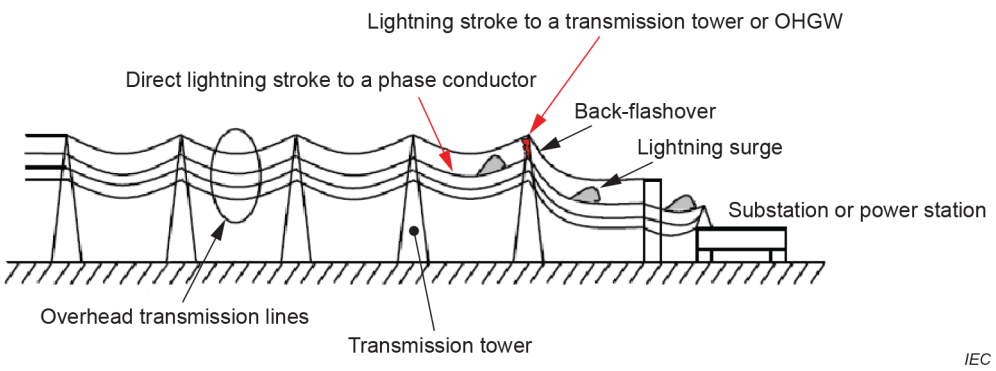

Figure 4 – Modelling of transmission lines and substations/power stations

5.4.4.4.3 Evaluation of lightning overvoltages and their waveshapes entering substations/power stations

For evaluation of the lightning overvoltages and their waveshapes, lightning surge analysis is carried out by using the prepared model shown in Figure 4. Analyse the lightning surges in

AVA Documents Document Sharing Hub

enter a substation or a power station with an EMT- simulation tool such as Electro-Magnetic Transient Program (EMTP), and then calculate lightning overvoltage and determine its waveshape at each point of the substation/power station (entry point, middle point, transformer point). Next, for each equipment installed in each point, review the maximum overvoltage generated at each point and its waveshape. Also calculate the incidence of lightning overvoltage.

5.4.4.4.4 Determination of representative voltages and overvoltages U_{rp} for FFO

Based on the overvoltage waveshape and its maximum amplitude obtained through the EMT analysis, determine the U_{rp} for FFO while considering the following items a)-d) and the incidence of lightning overvoltage among insulation characteristics of each equipment installed in each point:

a) Breakdown voltage - time characteristics

b) AC voltage superimposed with impulse voltage

c) Frequency of occurrence

The concepts for modelling of the transmission lines and substations/power stations are summarized in the Clause 5 of CIGRE TB 839:2021 [37] and the IEC TR 60071-4. The method shown in the Subclause 4.4 of CIGRE TB 542:2013 [38] is an example of evaluation method for representative voltages and overvoltages U_{rp} for FFO. In addition, the MTBF approach is an effective method for evaluating lightning failure rates of substations or power stations.

5.4.5 Very-fast-front overvoltages

5.4.5.1 Overview

Up to a system voltage of 800 kV the lightning impulse voltage is the dominant dielectric stress.

In UHV systems, VFFO can become the limiting dielectric stress in GIS, and the knowledge of the VFFO amplitude and rise time is a necessary basis for the insulation co-ordination and the evaluation of potential risks and countermeasures.

Because the VFFO are determined by superposition of traveling waves, they depend strongly on the specific GIS configuration and it is not possible to give generally valid voltage values.

In consequence, it is necessary to carry out a system analysis for each specific substation configuration.

A three-step procedure is recommended for VFFO insulation co-ordination. This procedure is outlined in Figure J.1 in Annex J.

5.4.5.2 Modeling aspects

5.4.5.2.1 General

The value of the VFFO depends on the voltage drop at the disconnector contacts just before striking; and on damping measures, if applied.

The voltage drop is dependent on the electric charge on the load side of the disconnector. This charge is remaining “trapped” at the load side after the last striking of an opening operation, and the trapped charge voltage (TCV) is the voltage resulting from this charge.

This TCV is specific for each disconnector design and depends mainly on the contact speed and the field homogeneity of the contact system. More detailed modeling is described in IEC TR 60071-4.

Documents
Document Sharing Hub
Full document details: IEC 60071-2 2023 RLV

5.4.5.2.2 Disconnector design without integrated damping resistor

For slow acting disconnectors (contact speed < 1 m/s) the maximum trapped charge voltage lies well below 1 p.u. The resulting VFFO is generally in the range of 1,7 p.u.; in specific cases it can reach up to 2,0 p.u. Depending on the LIWL, no measures need to be taken to limit the TCV.

Fast acting disconnectors (contact speed > 1 m/s) exhibit trapped charge levels up to 1 p.u. Consequently, generally higher VFFO could be produced compared to the slow acting disconnector.

5.4.5.2.3 Disconnector design with integrated damping resistor

With the integration of a damping resistor of some hundred ohms inside GIS, VFFO amplitudes in the range of 1,3 p.u. can be reached.

5.4.5.2.4 Evaluation of overvoltages

For the evaluation of the VFFO, the complete switchgear system consisting of GIS and connected equipment is analyzed.

The aim of the analysis is to calculate the maximum peak value $U_{\text{max_VFFO}}$. The temporal course of the voltage is also required, however, for later verification of the applicability of the simulation.

This usually is achieved by means of an approved travelling wave computer simulation program, using adequate models of the components, particularly of disconnectors and damping components.

As input for the simulation the value of the trapped charge voltage TCV is needed:

– For a worst-case assumption TCV = –1 p.u. can be applied; however, this may lead to unrealistic high VFFO values and accordingly extreme efforts for mitigation.
– If the statistics of the trapped charge behavior of the disconnector can be reasonably emulated, the 99 % probability value of the trapped charge voltage distribution shall be taken as TCV for the simulation.
– If the trapped charge behavior of the disconnector can be determined by tests on an appropriate test arrangement, the maximum value of the measured trapped charge voltages shall be taken as TCV for the simulation.

Eventually, the accuracy of the simulation model shall be verified. For this purpose, VFFO measurements are carried out on a representative GIS test pole or on the actual GIS substation arrangement.

5.4.5.2.5 Determination of U_{rp} for very-fast-front overvoltages

Since a general representative voltage for VFFO cannot be specified, the maximum peak value $U_{\text{max_VFFO}}$ determined on a case-by-case basis is used instead.

6 Co-ordination withstand voltage

6.1 Insulation strength characteristics

6.1.1 General

In all materials, conduction is caused by the migration of charged particles. Conductors have large numbers of relatively free electrons, which will drift in an applied electric field, while insulating media have very few free electrons. When electric stress in an insulating medium is increased to a sufficiently high level, the resistivity along a path through the insulating medium

AVA Documents Document Sharing Hub

Full document details: IEC 60071-2 2023 RLV

will change from a high value to a value comparable to that of conductors. This change is called breakdown.

Breakdown takes place in three main stages:

– the initial ionization at a point or points;
– the growth of an ionized channel across the gap;
– the bridging of the gap and the transition to a self-sustaining discharge.

A number of factors influence the dielectric strength of the insulation. Such factors include:

– the magnitude, shape, duration and polarity of the applied voltage;
– the electric field distribution in the insulation: homogeneous or non-homogeneous electric field, electrodes adjacent to the considered gap and their potential;
– the type of insulation: gaseous, liquid, solid or a combination of these; the impurity content and the presence of local inhomogeneities;
– the physical state of the insulation: temperature, pressure and other ambient conditions, mechanical stress, etc. The history of the insulation may also have an importance;
– the deformation of the insulation under stress, chemical effects, conductor surface effects, etc.

Breakdown in air is strongly dependent on the gap configuration and on the polarity and wave shape of the applied voltage stress. In addition, relative atmospheric conditions affect the breakdown strength regardless of shape and polarity of applied stress. ~~Relationships for the breakdown strength of air derived from laboratory measurements are referred to as the standard reference atmospheric conditions as defined by IEC 60060-1:~~

~~– temperature : 20 °C;~~
~~– pressure : 1 013 hPa (1 013 mbar);~~
~~– absolute humidity : 11 g/m^3.~~

~~Laboratory measurements have also been made for non-standard conditions including low air density, high relative humidity, contamination, ice and snow, high temperatures and the presence of combustion particles.~~

Since laboratory measurements have been made for non-standard conditions including low air density, high relative humidity, contamination, ice and snow, high temperatures and the presence of combustion particles, the breakdown strength of air derived from laboratory measurements are converted into the standard reference atmospheric conditions defined by IEC 60060-1:

– temperature : 20 °C;
– pressure : 1 013 hPa (1 013 mbar);
– absolute humidity : 11 g/m^3.

For outdoor insulation, the effects of air density, humidity, rain, and surface contamination become particularly important. IEC 60060-1 defines test procedures for external insulation in dry and wet conditions. For internal gas insulation, such as metal-enclosed gas-insulated switchgear, the effect of the internal pressure and temperature as well as local inhomogeneities and impurities play a significant role.

In liquid insulation, particle impurities, bubbles caused by chemical and physical effects or by local discharges, can drastically reduce the insulation strength. It is also important to note that the amount of chemical degradation of the insulation can tend to increase with time. The same can apply to solid insulation. Its electric strength can be affected by mechanical stress.

Documents
Document Sharing Hub
Full document details: IEC 60071-2 2023 RLV

The breakdown process is also statistical in nature and this should be taken into account. Due to the restoring feature of self-restoring insulation, its statistical response to stresses can be obtained by suitable tests. Therefore, self-restoring insulation is typically described by the statistical withstand voltage corresponding to a withstand probability of 90 %. For non-self-restoring insulation, the statistical nature of the strength cannot usually be found by testing and the assumed withstand voltage ~~deemed to correspond~~ corresponding to a withstand probability of 100 % is alternatively applied (see definition 3.24 of IEC 60071-1:~~2006~~2019).

Wind has an influence on insulation design, especially in the case of overhead lines employing free swinging insulator strings. Usually, the effect is only important in selecting gap lengths on the basis of power-frequency and switching impulse strengths.

Subclauses 6.1.2 to 6.1.5 give information on the different factors influencing the insulation response. For more detailed information, reference can be made to the CIGRE technical brochure [4].

6.1.2 Influence of polarity and overvoltage shapes

6.1.2.1 Influence of overvoltage polarity

In typical electrode geometries encountered in high-voltage applications, for the majority of cases the energized conductor is more highly stressed than the grounded conductor. For air insulation, if the more highly stressed electrode is positively charged, the gap breakdown voltage will be lower than if the more highly stressed electrode is negatively charged. This is because the propagation of ionization phenomena is more readily accomplished under positive stress than negative stress.

Where both electrodes are approximately equally stressed, two discharge processes will be involved, with both positive and negative characteristics. If it is clear which polarity will be more severe for a particular insulation system and gap configuration, the design will be based on that polarity; otherwise both polarities shall be considered.

6.1.2.2 Influence of overvoltage shape

Under impulse stress, the breakdown voltage also in general depends on the shape of the impulse.

For slow-front impulses, the strength of external insulation depends more on the impulse front than on its tail. The tail becomes especially important only in the case of contamination on the surface of external insulation. The strength of internal insulation is assumed to be affected by the peak value only.

For external insulation, it is typical that for each gap length there is an impulse time-to-peak for which the breakdown voltage is a minimum (the critical time to peak). Usually, the minimum is in the range of times-to-peak for slow-front overvoltages. The larger the gap length is, the more pronounced is the minimum. For air gaps in range I, the effect is negligible and can be ignored. For air clearances to be used in range II, this minimum breakdown voltage is, to all intents and purposes, equal to the breakdown voltage at the standard 250 µs time-to-peak. This means that the use of the withstand voltage of the insulation at the standard voltage shape 250/2 500 µs results in a conservative insulation design for slow-front overvoltages. For some systems in which slow-front overvoltages have fronts much longer than the standard one, the higher insulation strength at these fronts may be advantageously utilized.

The breakdown voltage of external insulation under lightning impulse stress decreases with increasing tail duration. For withstand voltages, this decrease is neglected, and the breakdown voltage is assumed to be equal to that under the standard lightning impulse 1,2/50 µs. However, some reduction in the insulation structure may be achieved, for example, in open-air substations protected by surge arresters, when the lightning overvoltage shape and its effect on the insulation strength is taken into account.

Documents
Document Sharing Hub
Full document details: IEC 60071-2 2023 RLV

The lightning overvoltage shapes are analysed and the insulating characteristics of SF_6 gas and oil-filled transformer elements for these actual surges are clarified to convert them into the standard voltage shape (see 5.3.4.6).

6.1.3 Phase-to-phase and longitudinal insulation

The dielectric strength of phase-to-phase and longitudinal insulation structures depends on the relationship between the two voltage components at the two terminals. This dependence is very important for external insulation in range II or in three-phase metal-enclosed substations.

For external insulation in range II, the response of the insulation to phase-to-phase switching overvoltages depends on the value of α which correlates positive and negative voltage stress components (see Annex C); tests to verify the required withstand voltage shall therefore be so designed as to reflect this phenomenon. The representative overvoltage shape standardized in IEC 60071-1 is a combined overvoltage having two synchronous components of opposite polarity; the positive is a standard switching impulse, while the negative is an impulse with time-to-peak and time-to-half value not shorter than those of the positive component. For insulation affected by the relative value of the two components, therefore, the actual overvoltage amplitude shall be converted into the representative amplitude taking into account the insulation response characteristics (see 5.3.3.2 and Annex C where a particular example is given).

For longitudinal insulation structures, the voltage components are specified by the representative overvoltages (see Clause 5).

The values for the conventional deviation for the phase-to-earth insulation strength given in 6.1.5 may also be applied to the strength of the external phase-to-phase or the longitudinal insulation, when the 50 % flashover voltage is taken as the sum of the components applied to the two terminals.

6.1.4 Influence of weather conditions on external insulation

Flashover voltages for air gaps depend on the moisture content and density of the air. Insulation strength increases with absolute humidity up to the point where condensation forms on the insulator surfaces. Insulation strength decreases with decreasing air density. A detailed description of the effects of air density and absolute humidity is given in IEC 60060-1.

When determining the co-ordination withstand voltage, it should be kept in mind that most adverse conditions from the point of view of dielectric strength (i.e. low absolute humidity, low air pressure and high temperature) do not usually occur simultaneously. In addition, at a given site, the corrections applicable for humidity and ambient temperature variations cancel each other. Therefore, the estimation of the strength can usually be based on the average ambient conditions at the location. Extreme atmospheric conditions on site need special consideration.

For insulators, the possible reduction in the withstand voltage due to snow, ice, dew or fog should be taken into account.

6.1.5 Probability of disruptive discharge of insulation

No method is at present available for the determination of the probability of disruptive discharge of a single piece of non-self-restoring insulation. Therefore, it is assumed that the withstand probability changes from 0 % to 100 % at the value defining the withstand voltage.

For self-restoring insulation, the ability to withstand dielectric stresses caused by the application of an impulse of given shape can be described in statistical terms. The methods ~~to~~ which shall be followed in the determination of the withstand probability curve are given in IEC 60060-1. For a given insulation, and for impulses of given shape and different peak values U, a discharge probability P can be associated with every possible value U, thus establishing a relationship $P = P(U)$. Usually, the function P is monotonically increasing with values of U. The resulting curve can be defined by three parameters:

AVA Documents
Document Sharing Hub

– U_{50}: corresponding to the voltage under which the insulation has a 50 % probability to flashover or to withstand;

– Z: the conventional deviation which represents the scatter of flashover voltages. It is defined as the difference between the voltages corresponding to flashover probabilities 50 % and 16 % as shown in Equation (4):

$$Z = U_{50} - U_{16} \tag{4}$$

– U_{spec}: the truncation voltage, which represents the maximum voltage within U_0 below which a disruptive discharge is no longer possible. The determination of this value, however, is not possible in practical tests.

Usually, the function P is given by a mathematical function (cumulative probability distribution) which is fully described by parameters U_{50}, Z and U_{spec}. In the traditionally used Gaussian distribution, the value of U_{50} is also the mean, and the conventional deviation is obtained directly from Equation (4). The truncation point is not often considered for the sake of simplicity.

For application of the statistical method for insulation co-ordination for slow-front overvoltages, the use of the modified Weibull cumulative probability distribution given in Equation (5) has advantages with respect to the Gaussian distribution (advantages explained in Annex B). Equation (5) represents a Weibull cumulative function with parameters chosen to match a Gaussian cumulative probability function at the 50 % and 16 % probability of flashover and to truncate the ~~distribution at~~ probability densities below $U_{50} - NZ$ (see Annex B).

$$P(U) = 1 - 0{,}5^{\left(1 + \frac{x}{N}\right)^{\gamma}} \tag{5}$$

where

x is the number of conventional deviations corresponding to U;

N is the number of conventional deviations corresponding to the truncation voltage U_{spec} for which $P(U_{spec}) = 0$.

And

$$x = (U - U_{50}) / Z$$

At one conventional deviation of the Gaussian probability distribution (at $x = -1$), $P(U) = 0{,}16$ in Equation (5). If $N = 4$ is chosen, then the exact value of γ shall be 4,83 in Equation (5). Approximating this value to $\gamma = 5$ does not result in any appreciable errors so that the modified Weibull distribution proposed in this document is described in Equation (6).

$$P(U) = 1 - 0{,}5^{\left(1 + \frac{x}{4}()^{5}\right)} \tag{6}$$

Figure 5 illustrates this modified Weibull distribution together with the Gaussian distribution to which it is matched. Figure 6 shows the same distributions on Gaussian probability scales.

For statistical calculations of expected performance in the field, ~~use~~ the conventional deviation should be made of detailed data obtained from field or laboratory tests. In the absence of such

AVA Documents
Document Sharing Hub
Full document details: IEC 60071-2 2023 RLV