IEC 60076-22-4

Edition 1.0 2019-03

INTERNATIONAL STANDARD

NORME INTERNATIONALE

Power transformers –
Part 22-4: Power transformer and reactor fittings – Insulating liquid to water heat exchangers

Transformateurs de puissance –
Partie 22-4: Accessoires pour transformateurs de puissance et bobines d'inductance – Hydroréfrigérants

IEC 60076-22-4:2019-03(en-fr)

Documents
Document Sharing Hub

Full document details: IEC 60076-22-4-2019

THIS PUBLICATION IS COPYRIGHT PROTECTED
Copyright © 2019 IEC, Geneva, Switzerland

All rights reserved. Unless otherwise specified, no part of this publication may be reproduced or utilized in any form or by any means, electronic or mechanical, including photocopying and microfilm, without permission in writing from either IEC or IEC's member National Committee in the country of the requester. If you have any questions about IEC copyright or have an enquiry about obtaining additional rights to this publication, please contact the address below or your local IEC member National Committee for further information.

Droits de reproduction réservés. Sauf indication contraire, aucune partie de cette publication ne peut être reproduite ni utilisée sous quelque forme que ce soit et par aucun procédé, électronique ou mécanique, y compris la photocopie et les microfilms, sans l'accord écrit de l'IEC ou du Comité national de l'IEC du pays du demandeur. Si vous avez des questions sur le copyright de l'IEC ou si vous désirez obtenir des droits supplémentaires sur cette publication, utilisez les coordonnées ci-après ou contactez le Comité national de l'IEC de votre pays de résidence.

IEC Central Office
3, rue de Varembé
CH-1211 Geneva 20
Switzerland

Tel.: +41 22 919 02 11
info@iec.ch
www.iec.ch

About the IEC
The International Electrotechnical Commission (IEC) is the leading global organization that prepares and publishes International Standards for all electrical, electronic and related technologies.

About IEC publications
The technical content of IEC publications is kept under constant review by the IEC. Please make sure that you have the latest edition, a corrigendum or an amendment might have been published.

IEC publications search - webstore.iec.ch/advsearchform
The advanced search enables to find IEC publications by a variety of criteria (reference number, text, technical committee,…). It also gives information on projects, replaced and withdrawn publications.

IEC Just Published - webstore.iec.ch/justpublished
Stay up to date on all new IEC publications. Just Published details all new publications released. Available online and once a month by email.

IEC Customer Service Centre - webstore.iec.ch/csc
If you wish to give us your feedback on this publication or need further assistance, please contact the Customer Service Centre: sales@iec.ch.

Electropedia - www.electropedia.org
The world's leading online dictionary on electrotechnology, containing more than 22 000 terminological entries in English and French, with equivalent terms in 16 additional languages. Also known as the International Electrotechnical Vocabulary (IEV) online.

IEC Glossary - std.iec.ch/glossary
67 000 electrotechnical terminology entries in English and French extracted from the Terms and Definitions clause of IEC publications issued since 2002. Some entries have been collected from earlier publications of IEC TC 37, 77, 86 and CISPR.

A propos de l'IEC
La Commission Electrotechnique Internationale (IEC) est la première organisation mondiale qui élabore et publie des Normes internationales pour tout ce qui a trait à l'électricité, à l'électronique et aux technologies apparentées.

A propos des publications IEC
Le contenu technique des publications IEC est constamment revu. Veuillez vous assurer que vous possédez l'édition la plus récente, un corrigendum ou amendement peut avoir été publié.

Recherche de publications IEC - webstore.iec.ch/advsearchform
La recherche avancée permet de trouver des publications IEC en utilisant différents critères (numéro de référence, texte, comité d'études,…). Elle donne aussi des informations sur les projets et les publications remplacées ou retirées.

IEC Just Published - webstore.iec.ch/justpublished
Restez informé sur les nouvelles publications IEC. Just Published détaille les nouvelles publications parues. Disponible en ligne et une fois par mois par email.

Service Clients - webstore.iec.ch/csc
Si vous désirez nous donner des commentaires sur cette publication ou si vous avez des questions contactez-nous: sales@iec.ch.

Electropedia - www.electropedia.org
Le premier dictionnaire d'électrotechnologie en ligne au monde, avec plus de 22 000 articles terminologiques en anglais et en français, ainsi que les termes équivalents dans 16 langues additionnelles. Egalement appelé Vocabulaire Electrotechnique International (IEV) en ligne.

Glossaire IEC - std.iec.ch/glossary
67 000 entrées terminologiques électrotechniques, en anglais et en français, extraites des articles Termes et Définitions des publications IEC parues depuis 2002. Plus certaines entrées antérieures extraites des publications des CE 37, 77, 86 et CISPR de l'IEC.

Documents
Document Sharing Hub

Full document details: IEC 60076-22-4-2019

IEC 60076-22-4

Edition 1.0 2019-03

INTERNATIONAL STANDARD

NORME INTERNATIONALE

Power transformers –
Part 22-4: Power transformer and reactor fittings – Insulating liquid to water heat exchangers

Transformateurs de puissance –
Partie 22-4: Accessoires pour transformateurs de puissance et bobines d'inductance – Hydroréfrigérants

INTERNATIONAL
ELECTROTECHNICAL
COMMISSION

COMMISSION
ELECTROTECHNIQUE
INTERNATIONALE

ICS 29.180

ISBN 978-2-8322-6635-9

Warning! Make sure that you obtained this publication from an authorized distributor.
Attention! Veuillez vous assurer que vous avez obtenu cette publication via un distributeur agréé.

® Registered trademark of the International Electrotechnical Commission
Marque déposée de la Commission Electrotechnique Internationale

AVA Documents
Document Sharing Hub

Full document details: IEC 60076-22-4-2019

CONTENTS

FOREWORD 4
INTRODUCTION 6
1 Scope 7
2 Normative references 7
3 Terms and definitions 7
4 General requirements 8
4.1 Service conditions 8
4.2 Performance requirements 8
4.3 Degree of protection of electrical components (IP) 8
4.4 Corrosion protection 8
4.4.1 External (atmosphere) 8
4.4.2 Insulating liquid side 9
4.4.3 Water side 9
4.5 Insulating liquid characteristics 9
5 Design and characteristics 9
5.1 General 9
5.2 Main components and characteristics 9
5.2.1 General 9
5.2.2 Shell 9
5.2.3 Tube bundle in double tube arrangement 9
5.2.4 Headers 10
5.3 General characteristics 10
5.3.1 Rating plate information 10
5.3.2 Information to be provided with enquiry and order 10
5.3.3 Rated cooling capacity 11
5.3.4 Mechanical design 11
5.3.5 Preparation for transport and storage 13
5.3.6 Mounting and operating conditions 14
6 Tests 14
6.1 General requirements for tests 14
6.1.1 General 14
6.1.2 List of tests 14
6.2 Routine tests 15
6.2.1 Tightness test insulating liquid side 15
6.2.2 Tightness test water side 15
6.2.3 Visual inspection 15
6.2.4 Cleanliness 15
6.3 Type tests – Rated values test 15
Annex A (informative) Details of the heat exchangers 16
A.1 Masses and dimensions 16
A.2 Collection and forms of suspensory types 16
A.3 Collection and forms of horizontal types 17
A.4 Collection and forms of vertical standing types 18
A.5 Parts list – Materials – Common selection of materials 19
A.6 Example for fresh water 20

Documents
Document Sharing Hub
Full document details: IEC 60076-22-4-2019

Annex B (informative) Rating conditions of the heat exchangers 21
B.1 General 21
B.2 Definitions, symbols 21
B.3 Calculation of capacity in service 21
B.3.1 Service capacity for different temperatures at inlet according to Figure B.1 21
B.3.2 Service capacity for different mass flows according to Figure B.2 for plain tubes and according to Figure B.3 for finned tubes 21
B.3.3 Service capacity for different mass flows and different temperatures 22
B.3.4 Example for calculation of 25 % capacity margin of new heat exchangers 22
Annex C (informative) Example for calculation of capacity in service 26
Bibliography 28

Figure A.1 – Collection and forms of suspensory types 16
Figure A.2 – Collection and forms of horizontal types 17
Figure A.3 – Collection and forms of vertical standing types 18
Figure B.1 – Capacity factor depending on inlet temperatures of oil and water 23
Figure B.2 – Capacity factor depending on mass for plain tubes 24
Figure B.3 – Capacity factor depending on mass for finned tubes 25

Table 1 – Water quality data 12
Table 2 – Mandatory fittings 13
Table A.1 – Examples of material selection depending on water quality 20
Table A.2 – Average values for chemically neutral water (fresh water) 20

Documents
Document Sharing Hub
Full document details: IEC 60076-22-4-2019

INTERNATIONAL ELECTROTECHNICAL COMMISSION

POWER TRANSFORMERS –

Part 22-4: Power transformer and reactor fittings – Insulating liquid to water heat exchangers

FOREWORD

1) The International Electrotechnical Commission (IEC) is a worldwide organization for standardization comprising all national electrotechnical committees (IEC National Committees). The object of IEC is to promote international co-operation on all questions concerning standardization in the electrical and electronic fields. To this end and in addition to other activities, IEC publishes International Standards, Technical Specifications, Technical Reports, Publicly Available Specifications (PAS) and Guides (hereafter referred to as "IEC Publication(s)"). Their preparation is entrusted to technical committees; any IEC National Committee interested in the subject dealt with may participate in this preparatory work. International, governmental and non-governmental organizations liaising with the IEC also participate in this preparation. IEC collaborates closely with the International Organization for Standardization (ISO) in accordance with conditions determined by agreement between the two organizations.
2) The formal decisions or agreements of IEC on technical matters express, as nearly as possible, an international consensus on the relevant subjects since each technical committee has representation from all interested IEC National Committees.
3) IEC Publications have the form of recommendations for international use and are accepted by IEC National Committees in that sense. While all reasonable efforts are made to ensure that the technical content of IEC Publications is accurate, IEC cannot be held responsible for the way in which they are used or for any misinterpretation by any end user.
4) In order to promote international uniformity, IEC National Committees undertake to apply IEC Publications transparently to the maximum extent possible in their national and regional publications. Any divergence between any IEC Publication and the corresponding national or regional publication shall be clearly indicated in the latter.
5) IEC itself does not provide any attestation of conformity. Independent certification bodies provide conformity assessment services and, in some areas, access to IEC marks of conformity. IEC is not responsible for any services carried out by independent certification bodies.
6) All users should ensure that they have the latest edition of this publication.
7) No liability shall attach to IEC or its directors, employees, servants or agents including individual experts and members of its technical committees and IEC National Committees for any personal injury, property damage or other damage of any nature whatsoever, whether direct or indirect, or for costs (including legal fees) and expenses arising out of the publication, use of, or reliance upon, this IEC Publication or any other IEC Publications.
8) Attention is drawn to the normative references cited in this publication. Use of the referenced publications is indispensable for the correct application of this publication.
9) Attention is drawn to the possibility that some of the elements of this IEC Publication may be the subject of patent rights. IEC shall not be held responsible for identifying any or all such patent rights.

International Standard IEC 60076-22-4 has been prepared by IEC technical committee 14: Power transformers.

The text of this International Standard is based on the following documents:

FDIS	Report on voting
14/996/FDIS	14/1004/RVD

Full information on the voting for the approval of this International Standard can be found in the report on voting indicated in the above table.

This document has been drafted in accordance with the ISO/IEC Directives, Part 2.

A list of all parts in the IEC 60076 series, published under the general title *Power transformers*, can be found on the IEC website.

Documents
Document Sharing Hub

Full document details: IEC 60076-22-4-2019

The committee has decided that the contents of this document will remain unchanged until the stability date indicated on the IEC website under "http://webstore.iec.ch" in the data related to the specific document. At this date, the document will be

- reconfirmed,
- withdrawn,
- replaced by a revised edition, or
- amended.

Documents
Document Sharing Hub

Full document details: IEC 60076-22-4-2019

INTRODUCTION

Under the part title “Power transformer and reactor fittings” this part of IEC 60076-22 covers the insulating liquid to water heat exchangers in the cooling circuits of power transformers and reactors.

Annex B gives guidance to the end user for approximation of the behaviour of the heat exchanger under different operation conditions. Annex C gives an example based on the calculation rules stipulated in Annex B.

Documents
Document Sharing Hub

Full document details: IEC 60076-22-4-2019

POWER TRANSFORMERS –

Part 22-4: Power transformer and reactor fittings – Insulating liquid to water heat exchangers

1 Scope

This part of IEC 60076 applies to liquid to water heat exchangers, using forced water and forced liquid circuits, used on liquid immersed power transformers according to IEC 60076-1 and reactors according to IEC 60076-6 with and without conservator for indoor or outdoor installation. It outlines the service conditions and the mechanical and electrical requirements that are common to this equipment.

It also outlines the operation requirements specific to this equipment as well as the preferred dimensions relevant for interchangeability and the type and routine tests to be performed.

2 Normative references

The following documents are referred to in the text in such a way that some or all of their content constitutes requirements of this document. For dated references, only the edition cited applies. For undated references, the latest edition of the referenced document (including any amendments) applies.

IEC 60076-1, *Power transformers – Part 1: General*

IEC 60076-7, *Power transformers – Part 7: Loading guide for mineral oil-immersed power transformers*

IEC 60296, *Fluids for electrotechnical applications – Unused mineral insulating oils for transformers and switchgear*

IEC 60529, *Degrees of protection provided by enclosures (IP Code)*

ISO 4406, *Hydraulic fluid power – Fluids – Method for coding the level of contamination by solid particles*

ISO 12944 (all parts), *Paints and varnishes – Corrosion protection of steel structures by protective paint systems*

3 Terms and definitions

For the purposes of this document, the following terms and definitions apply.

ISO and IEC maintain terminological databases for use in standardization at the following addresses:

- IEC Electropedia: available at http://www.electropedia.org/
- ISO Online browsing platform: available at http://www.iso.org/obp

Documents
Document Sharing Hub

Full document details: IEC 60076-22-4-2019

3.1
insulating liquid to water heat exchanger
component for the cooling of the insulating liquid of the transformer, using forced circulation of the insulating liquid and forced circulation of water

4 General requirements

4.1 Service conditions

The normal service conditions set out in IEC 60076-1 represent the normal scope of operation of the device and equipment specified in this document. Unless otherwise specified, fresh water as defined by Table A.2 shall be considered as cooling water.

Device and equipment specification for operation under service conditions different from the ones specified by IEC 60076-1 shall be subject to agreement between the purchaser and supplier, as they require special consideration in the design of the device and equipment.

Any particular condition, which can influence the correct functioning of the cooler, shall be specified, such as water quality, addition of anti-freeze compounds, mud, microorganisms, addition of biocides, sea weed, and intermittent operation.

4.2 Performance requirements

Liquid to water heat exchangers should fulfil the following requirements:

- mechanical separation of liquid and water circuit shall be ensured at any time;
- independent design and control of liquid and water conditions shall be possible;
- the access to the water side surfaces shall be possible without influencing or opening the liquid side circuit;
- easy access to the water side surfaces for inspection and cleaning on site by mechanical means, for example using brushes;
- the heat exchanger construction shall be suitable for operating conditions complying with the permissible pressure values of the liquid side and the water side;
- easy detection of possible leakages at the liquid and the water side.

4.3 Degree of protection of electrical components (IP)

The degree of protection of the connecting box or terminal box for an outdoor installation shall be at least IP 54 according to IEC 60529, unless otherwise specified by the purchaser.

4.4 Corrosion protection

4.4.1 External (atmosphere)

The materials used for the construction of the equipment or the surface treatment shall be resistant to accidental contact with the insulating liquid and suitable to withstand the environmental conditions given in 4.1. The corrosion protection shall be agreed between purchaser and manufacturer according to ISO 12944 (all parts). The responsibility to specify the correct level of corrosion protection lies with the purchaser and is dependent on the environment where the transformer will be located and on the durability required. Unless otherwise specified, minimum withstand level shall be C4 medium durability according to ISO 12944-6.

Documents
Document Sharing Hub
Full document details: IEC 60076-22-4-2019

4.4.2 Insulating liquid side

In consideration of the storage conditions and expected time between shipment and commissioning, the corrosion protection on the insulating liquid side of the cooling system shall be agreed between purchaser and manufacturer. As a minimum requirement, precautions shall be taken to prevent the ingress of moisture and the development of internal corrosion. The internal flushing with insulation liquid fully miscible and compatible with the liquid to be used in service conditions and the use of blanking plates with gaskets are considered as a minimum. Internal painting, nitrogen filling, dehydrating material, etc., can be used as other or additional solutions.

4.4.3 Water side

The corrosion protection on the water side of the cooling system shall be agreed between purchaser and manufacturer and is dependent on the water quality. To attain the requested degree of protection the manufacturer shall choose the combination of material and surface protection. As a minimum requirement for paint, an epoxy coating with a thickness of 150 µm shall be applied.

4.5 Insulating liquid characteristics

If not otherwise specified, the insulating liquid is mineral oil according to IEC 60296 and the operating temperature shall be in accordance with IEC 60076-7.

When the insulating liquid is not mineral oil then the viscosity variation, the operating temperature and all the other operating characteristics shall be indicated by the purchaser.

5 Design and characteristics

5.1 General

Shell and tube heat exchangers with double tube arrangement are established as the current best practice of transformer insulating liquid cooling in compliance with all the requirements. Any different type may be accepted and applied if all the requirements of 4.2 are fulfilled.

5.2 Main components and characteristics

5.2.1 General

See Figure A.1, Figure A.2 and Figure A.3 for reference.

The main components of a shell and tube heat exchanger are the shell, the tube bundle inside the shell and two headers at both ends of the shell.

5.2.2 Shell

The shell is the cylindrical compartment containing the tube bundle and is provided with flanged nozzles for piping connection of the insulating liquid. The shell contains the insulating liquid. Baffles on the tube bundle are used to optimize the liquid path inside the shell.

5.2.3 Tube bundle in double tube arrangement

Double tubes are used for the tube bundle for safety reasons of the transformer. The liquid pressure outside the tubes is independent from the water pressure and is usually less than the water pressure inside the tubes.

Documents
Document Sharing Hub
Full document details: IEC 60076-22-4-2019

- The double tubes consist of two concentric tubes without a blocking fluid in between; the tubes are straight and the outer tubes are plain or finned. Between the inner and outer tube there shall be grooves, which enable the detection of a potential leakage by using a proper device. The double tubes are connected at both ends to the respective tube sheets by roll expansion or welding. The connection shall be fluid tight.
- The tube bundle can be arranged in different even number of passes to optimize water flow.

Removable tube bundles are the preferred solution for maintenance purposes.

5.2.4 Headers

- Two headers close the shell at both ends.
- One header includes flanged nozzles for the connection to the water piping. Inside the other header, the water is redirected.

5.3 General characteristics

5.3.1 Rating plate information

The rating plate shall be corrosion resistant and acid proof. It shall be visible when the heat exchanger is assembled to the transformer and carry the following data:

- logo or name of manufacturer;
- country and manufacturing location;
- number of this document;
- manufacturer identification;
- manufacturer serial number;
- year of manufacturing.

Rated data:

- rated cooling capacity [kW];
- rated liquid and water flow quantity [m^3/h];
- inlet and outlet temperatures liquid-side and water-side [°C];
- pressure drop in the heat exchanger liquid side/water side [bar];
- maximum pressure in service for liquid-side [kPa];
- maximum pressure in service for water-side [kPa];
- maximum design temperature for liquid-side [°C];
- mass of heat exchanger without oil and water [kg];
- oil and water quantity for filling [dm^3].

5.3.2 Information to be provided with enquiry and order

The purchaser shall supply to the manufacturer the following information with the enquiry:

- insulation liquid characteristics;
- water quality;
- rated cooling capacity Q_r kW;
- water temperature at inlet t_1' °C;
- water temperature at outlet (max.) t_1'' °C;
- maximum allowed liquid temperature t_2' °C;

Documents
Document Sharing Hub

- liquid temperature difference (min. value/max. value) Δt_2 K;
- liquid flow quantity V_2 m^3/h;
- water flow quantity (max.) V_1 m^3/h;
- operating pressure (water side) kPa.

In case of order the following rated values should be fixed by the manufacturer:

- materials water side (Clause A.5)
- rated cooling capacity Q_r kW;
- rated water flow quantity V_1 m^3/h;
- rated oil flow quantity V_2 m^3/h;
- water temperature at inlet t_1' °C;
- water temperature at outlet t_1'' °C;
- liquid temperature at inlet t_2' °C;
- liquid temperature at outlet t_2'' °C;
- water side pressure drop Δp_1 kPa;
- liquid side pressure drop Δp_2 kPa;
- maximum operating pressure (water side) p_1 kPa;
- maximum operating pressure (liquid side) p_2 kPa.

5.3.3 Rated cooling capacity

The rated cooling capacity of the heat exchanger is the minimum capacity, which the manufacturer has to guarantee when the cooler is new. Unless otherwise specified by agreement between purchaser and manufacturer the heat exchanger shall be designed with a capacity margin of minimum 25 %, because piping conditions on the water side, not conforming to the design, can affect the efficiency and the life expectation of the cooler.

For new heat exchangers, the capacity, including the margin, has to be achieved with the rated values for oil flow quantity, water flow quantity, oil temperature at inlet and water temperature at inlet.

5.3.4 Mechanical design

5.3.4.1 General

The mechanical design is based on the environmental conditions described in 4.1. The maximum liquid temperature shall be 100 °C and the maximum water temperature 50 °C. Other environmental conditions, temperatures, as well as other cooling liquids shall be agreed between manufacturer and purchaser.

The cooler can be designed to be installed in a vertical or horizontal position. The vertically installed coolers can be suspended on frames. See Annex A for examples.

The cooling tubes and plates shall be fluid tight connected. The tube bundle can have the following two possible executions to be agreed between manufacturer and purchaser:

- with floating head: in this execution the bundle can be removed for inspection and replacement;
- with fixed tube sheets and stationary heads.

AVA Documents
Document Sharing Hub

Full document details: IEC 60076-22-4-2019

For both executions, the water channels are removable and can be emptied separately. Removing of a water channel shall not influence the oil circuit.

The heat exchanger shall be designed for an unprotected outdoor installation.

The heat exchanger shall be provided with draining and venting devices on both the liquid and water side.

The mechanical design of the heat exchanger oil side shall withstand a vacuum of 2,5 kPa absolute pressure.

The maximum admitted oil pressure in service shall be 330 kPa.

The maximum admitted water pressure in service in this document shall be 800 kPa.

5.3.4.2 Materials

The liquid to water heat exchanger can be made of different materials depending on the quality of the cooling water and the operation conditions, see Table A.1. For examples of best practice in case of water of drinking quality see Clause A.5.

5.3.4.3 Water quality

The purchaser shall specify at least the data indicated in Table 1 along with the enquiry.

Table 1 – Water quality data

sampling temperature	iron/manganese content	water type (e.g. fresh water)
pH value	content of chloride	content of ammonium
total degree of hardness	content of sulphate	free oxygen
carbonate hardness (m-value)	content of nitrate	electrical conductivity
free CO_2 (p-value)	content of phosphate	suspended solids

If no water quality is provided, the water is considered to be drinking water according to Table A.2.

In case of changing water quality during operation (e.g. near the coast where the cooling water can be river water, brackish water and sea water depending on the tide) the material selection shall consider all possible conditions.

5.3.4.4 Mandatory fittings

The liquid to water heat exchanger shall be equipped with at least the following fittings (see Table 2):

Documents
Document Sharing Hub

Full document details: IEC 60076-22-4-2019

Table 2 – Mandatory fittings

N°	Designation	Remarks
1	Connection flange DN 15/PN 6	For liquid draining, for connection of drain valve
1	Vent plug	Venting liquid side
1	Leakage detector	For detection of leakages, water side or liquid side
	Water drain	Each compartment shall have a water drain, allowing to fully drain the cooler
	Locking plug	Each thermometer pocket and water drain shall have a locking plug
2	Plate support	
1	Cleaning orifice for water compartment	Access to the header without removing the piping
2	Liquid side thermometer pocket G ¾	Immersion depth 65 mm, internal thread G ¾ x 20 mm
2	Water side thermometer pocket G ¾	Immersion depth 65 mm, internal thread G ¾ x 20 mm
2	Connection flange PN 10	Connection of liquid side
2	Connection flange PN 10	Connection of water side
	Connection flange DN 15 PN 6	Thread M10, thread length min. 12,5 mm, venting connection water-side, as many as necessary for venting all compartments[b]
1	Earthing stud M12	
2	Lifting lug[a]	

[a] Lifting lug for each component with 30 kg mass and more is provided.

[b] Vertical water connection flanges may be used for venting.

Upon customer request, the cooler may be designed for and equipped with thermometers, flow indicators, pressure gauges and differential pressure devices.

5.3.4.5 Manufacturing requirements

Internal surfaces insulating liquid side shall be flushed with insulation liquid to remove any potential debris resulting from the manufacturing process.

Number and size of particles, for example according to ISO 4406, as well as particle test procedure and flushing velocity or other cleaning criteria, have to be agreed. The recommended minimum level according to ISO 4406 is -/12/10.

The flushing via a micron filter shall continue until the amount of particles is less than the agreed limited value. The flushing oil shall be in accordance with IEC 60296. During flushing the oil flow velocity shall be sufficient to remove all the particles.

Immediately after the flushing procedure the flushing liquid has to be removed; possible small residuals can be considered. All flanges on the insulating liquid side shall be closed with covers not to be removed without purpose.

5.3.5 Preparation for transport and storage

5.3.5.1 Transport

The flanges on the water side as well as all other openings (i.e. thermometer pockets, venting and draining devices) shall be closed to prevent ingress of humidity and pollution.

The liquid to water heat exchanger shall be arranged on a pallet suited for easy handling with a forklift and to prevent damages during the transport. A suitable protection to prevent pollution during transport shall be provided.

AVA Documents
Document Sharing Hub

Full document details: IEC 60076-22-4-2019

For difficult transport conditions, such as overseas transport, specific requirements may apply.

5.3.5.2 Storage

Unless otherwise specified, the storage configuration shall be designed to ensure a minimum storage period of three months until commissioning in the environmental conditions defined in IEC 60076-1.

For a storage period over three months, the manufacturer shall be informed about the exact storage conditions (for example humidity and temperature changes) and storage requirements may be specified.

As an option, upon demand by the purchaser, the insulating liquid side of the heat exchanger shall be filled under an overpressure of approximately 45 kPa with nitrogen or dry air (humidity less than 10 %) using a valve installed in one of the blind flanges. For long-term storage, which has to be indicated by the purchaser, the overpressure shall remain at minimum 5 kPa and therefore has to be checked regularly.

5.3.6 Mounting and operating conditions

Liquid to water heat exchangers, which are not in service, shall be completely drained, cleaned, dried and closed.

They should be checked periodically on the water-side depending on the water quality and cleaned if necessary.

Insoluble impurities, especially suspended solids will cause frequent cleaning periods. This could be avoided, for example by using screens or filters.

The liquid to water heat exchangers shall be operated with the nominal water flow quantity.

In case a higher or lower water flow quantity is required, this has to be clarified with the supplier. Upper and lower limits have to be checked carefully especially under consideration of the maximum permissible water velocity, permissible pressure drop and potential contamination by the cooling water.

6 Tests

6.1 General requirements for tests

6.1.1 General

Tests shall be made at an ambient temperature between 10 °C and 40 °C, unless otherwise specified.

All measuring instruments used for the tests shall have traceable accuracy and be subject to periodic calibration. An example of a quality management system is ISO 9001.

6.1.2 List of tests

6.1.2.1 Routine tests

The following list of tests is not in any specific order:

– tightness test insulating liquid side (6.2.1);
– tightness test water side (6.2.2);
– tightness test leakage compartment according to manufacturer's best practice;

Documents
Document Sharing Hub
Full document details: IEC 60076-22-4-2019

– visual inspection (6.2.3);
– cleanliness (6.2.4);
– external painting according to specification.

6.1.2.2 Type tests

The following list of tests is not in any specific order:

– rated values test (6.3).

6.2 Routine tests

6.2.1 Tightness test insulating liquid side

The insulating liquid to water heat exchanger has to be submitted to one of the following alternative tightness tests by agreement between manufacturer and purchaser:

- hydraulic test with transformers oil filled at (60 ± 5) °C and a pressure of 500 kPa for 2 h;
- pneumatic test with compressed air under water at 500 kPa for 30 min.

Any leakage has to be detected (by visual inspection), during the above period .

6.2.2 Tightness test water side

The insulating liquid to water heat exchanger has to be filled with fresh water under a pressure of 1 200 kPa. After elimination of the last leakage the pressure test shall be performed for a period of 2h.

6.2.3 Visual inspection

6.2.3.1 Outer surface

All surfaces shall be free of damages, deformations and dirt. No sort of filling compounds shall be used.

6.2.3.2 Inside surface insulating liquid side

All visible surfaces shall be free of damages, deformations and dirt.

6.2.3.3 Inside surface water side

All visible surfaces shall be free of damages, deformations and dirt.

6.2.4 Cleanliness

The cleanliness of the internal surfaces shall comply with the values indicated in 5.3.4.5.

6.3 Type tests – Rated values test

Usually this test is performed together with the transformer. Separate type tests should be planned by a special agreement between supplier and purchaser.

Documents
Document Sharing Hub

Full document details: IEC 60076-22-4-2019

Annex A
(informative)

Details of the heat exchangers

A.1 Masses and dimensions

The masses and dimensions of a heat exchanger are usually fixed in the offer. The dimensions A, B, and C in Figures A.1 to A.3 are the minimum information for a preliminary offer.

In general, dimensions and nozzle position/orientation should be agreed between manufacturer and purchaser depending on the flow rates.

A.2 Collection and forms of suspensory types

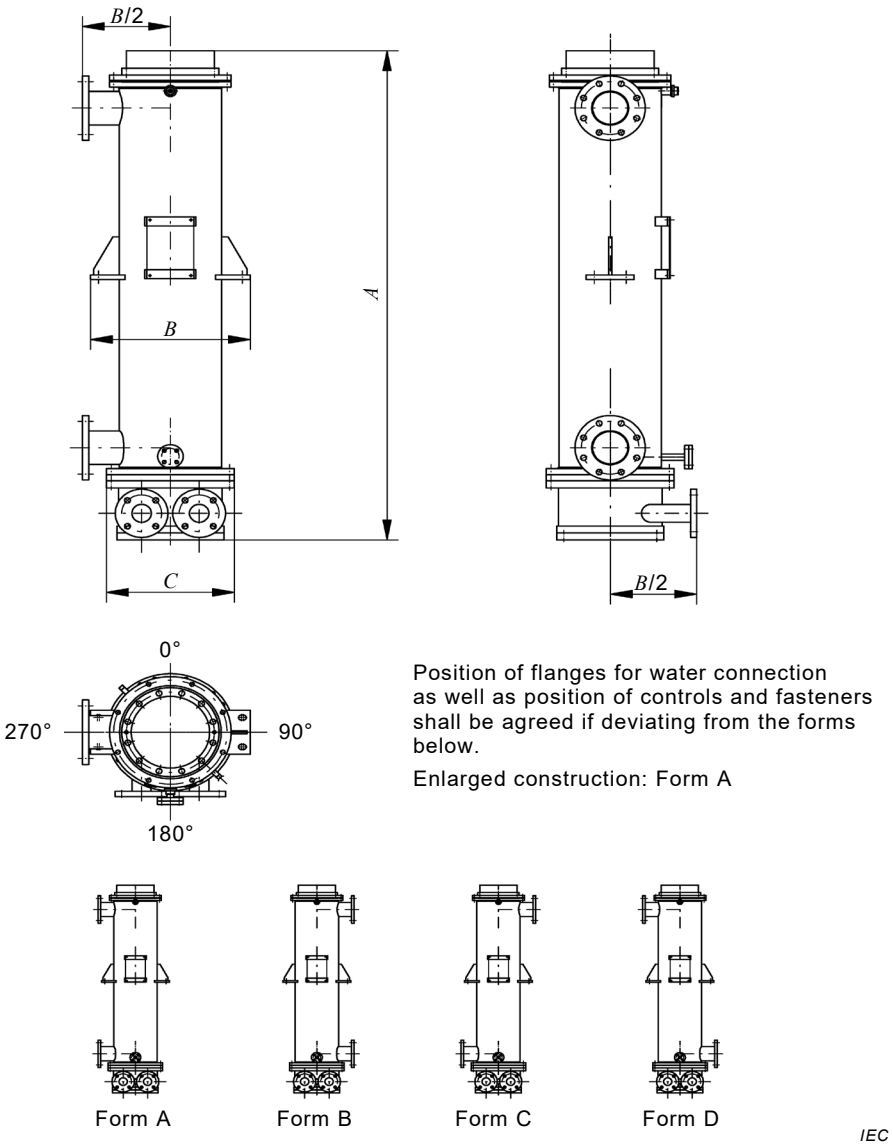

NOTE 1 The position of the oil inlet/outlet or water inlet/outlet is arbitrary.

NOTE 2 The positions of the thermometer pocket in the middle or on the edge depend on the manufacturer's decision.

Figure A.1 – Collection and forms of suspensory types

Documents
Document Sharing Hub
Full document details: IEC 60076-22-4-2019

A.3 Collection and forms of horizontal types

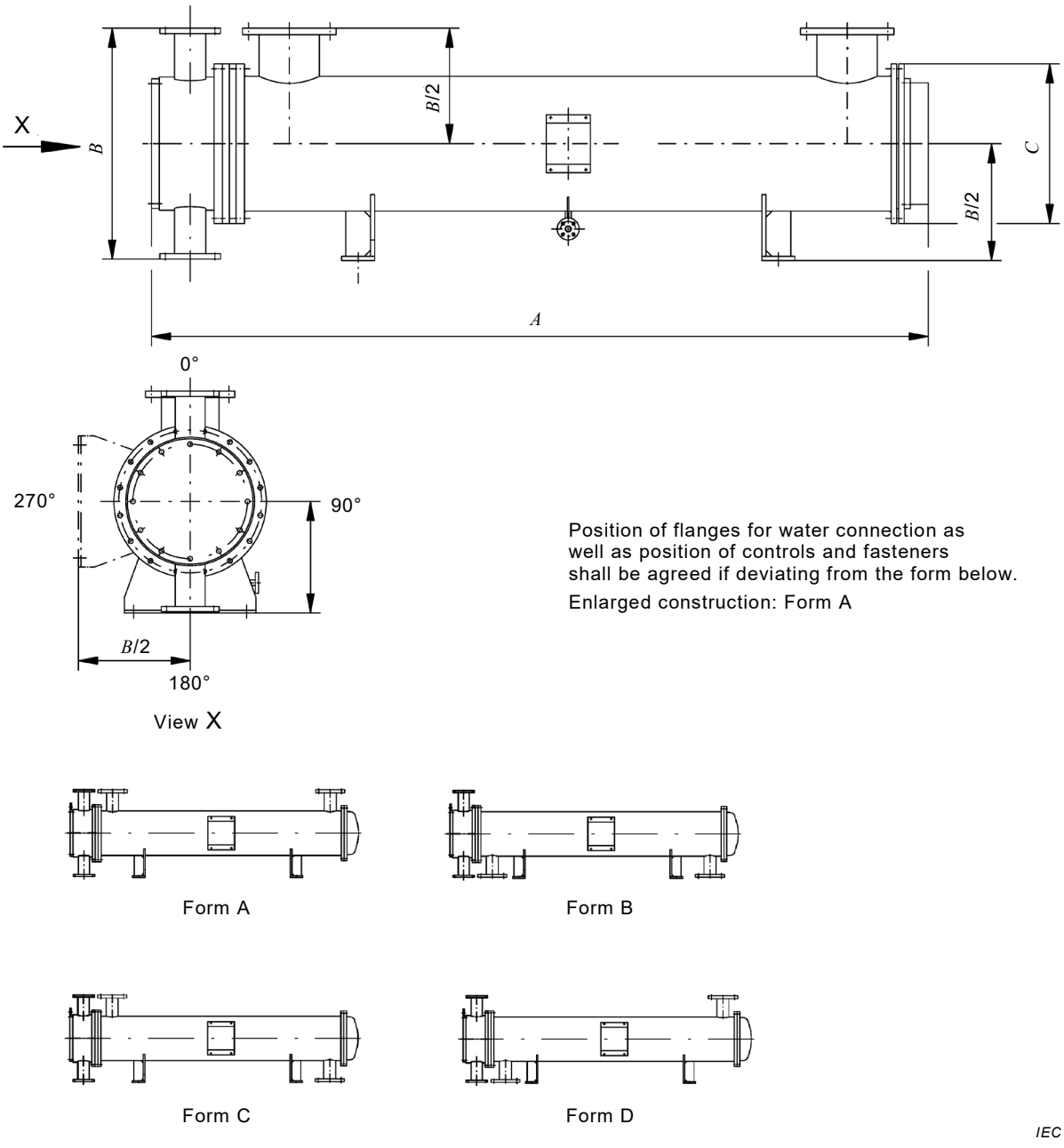

NOTE The position of the oil inlet/outlet or water inlet/outlet is arbitrary.

Figure A.2 – Collection and forms of horizontal types

Documents
Document Sharing Hub
Full document details: IEC 60076-22-4-2019